SONY®

# HD DIGITAL VIDEOCORDER

# HDD-1000

SONY
SONY
SONY
HDD-1000
Digital HDVS

## Digital HDVS

MAINTENANCE MANUAL
Volume 2 1st Edition (Revised 6)
Serial No. 10001 and Higher

このマニュアルに記載されている事柄の著作権は当社にあり，説明内容は機器購入者の使用を目的としています。
従って，当社の許可なしに無断で複写したり，説明内容（操作，保守等）と異なる目的で本マニュアルを使用することを禁止します。

The material contained in this manual consists of information that is the property of Sony Corporation and is intended solely for use by the purchasers of the equipment described in this manual.

Sony Corporation expressly prohibits the duplication of any portion of this manual or the use thereof for any purpose other than the operation or maintenance of the equipment described in this manual without the express written permission of Sony Corporation.

Le matériel contenu dans ce manuel consiste en informations qui sont la propriété de Sony Corporation et sont destinées exclusivement à l'usage des acquéreurs de l'équipement décrit dans ce manuel.

Sony Corporation interdit formellement la copie de quelque partie que ce soit de ce manuel ou son emploi pour tout autre but que des opérations ou entretiens de l'équipement à moins d'une permission écrite de Sony Corporation.

Das in dieser Anleitung enthaltene Material besteht aus Informationen, die Eigentum der Sony Corporation sind, und ausschließlich zum Gebrauch durch den Käufer der in dieser Anleitung beschriebenen Ausrüstung bestimmt sind.

Die Sony Corporation untersagt ausdrücklich die Vervielfältigung jeglicher Teile dieser Anleitung oder den Gebrauch derselben für irgendeinen anderen Zweck als die Bedienung oder Wartung der in dieser Anleitung beschriebenen Ausrüstung ohne ausdrückliche schriftliche Erlaubnis der Sony Corporation.

# 目 次

# TABLE OF CONTENTS

## Volume 1

1. 設置
2. サービスインフォメーション
3. 診断機能
4. 回路説明
5. 定期点検および保守
6. 部品交換
7. 調整のための一般情報
8. 電源部調整
9. テープ走行系調整
10. システムコントロール／サーボ調整
11. オーディオ信号系調整
12. ビデオ信号系調整

1. **INSTALLATION**
2. **SERVICE INFORMATION**
3. **DIAGNOSIS FUNCTION**
4. **THEORY OF OPERATION**
5. **PERIODIC CHECK & MAINTENANCE**
6. **PARTS REPLACEMENT**
7. **GENERAL INFORMATION FOR ALIGNMENT**
8. **POWER SUPPLY ALIGNMENT**
9. **TAPE RUNNING SYSTEM ALIGNMENT**
10. **SYSTEM CONTROL/SERVO ALIGNMENT**
11. **AUDIO SIGNAL SYSTEM ALIGNMENT**
12. **VIDEO SIGNAL SYSTEM ALIGNMENT**

## Volume 2

### A. BLOCK DIAGRAMS

Audio Signal System Overall Block Diagram ···· A-1
Video Signal System Overall Block Diagram ···· A-7
Servo／System Control Overall Block Diagram ···· A-11

AP-22 Board ···· A-15
Audio／CUE／TC／CTL R／P／Erase Amp
AU-109 Board (1／2) ···· A-21
Audio PB EQ and CUE Mod／Demod
AU-109 Board (2／2) ···· A-27
CPU and TC Selector
PRD-1 Board ···· A-33
Video REC Equalizer
DRC-1 Board ···· A-39
Video PB EQ & Clock PLL
SV-90, CD-37, RM-43, DS-19 Board ···· A-45
Servo／Logic Control
KC-14, KY-139, DP-63, EN-55, DET-3 Board ···· A-49
Function Control Panel
SY-103 Board (1／2) ···· A-53
Time Code Reader and Generator
SY-103 Board (2／2) ···· A-59
CPU
SP-01, 02, 03 Board ···· A-65
Power Supply

### B. SCHEMATIC DIAGRAM & BOARD LAYOUT

**CARD RACK**

SV-90 Board ···· B-3
Servo／Logic Control
SY-103 Board ···· B-31
CPU and TC Reader／Gen
DRC-1 Board ···· B-47
Video PB EQ and Clock PLL
PRD-1 Board ···· B-69
Video REC Equalizer
AU-109 Board ···· B-87
Audio PB EQ, CUE Mod／Demod and CPU
AP-22 Board ···· B-129
Audio／CUE／TC／CTL R／P／Erase Amp

**LEVEL CONTROL PANEL**

VR-74 Board ···· B-157
Audio Level Control
SW-269 Board ···· B-163
Audio Monitor Select／Level Meter

**TAPE TRANSPORT**
CD-37 Board ········ B-171
Capstan/Drum Motor Drive Amplifier
RM-43 Board ········ B-181
Reel Motor Drive Amplifier
DS-19 Board ········ B-191
TTP AUX
FE-05 Board ········ B-197
Rotary Erase Amplifier

**HEAD DRUM**
LDR-1, 2, 3, 4 Board ········ B-202
Lower Drum
UDR-1, 2, 3 Board ········ B-201
Upper Drum
SR-37, 38, 44 Board ········ B-202
Slip Ring and Brush

**FUNCTION CONTROL PANEL**
Function Control Panel ········ B-215
DET-3 Board ; Search Dial Detector
DP-63 Board ; Sub Key
EN-55 Board ; Entry Key
KC-14 Board ; Key Control
KY-139 Board ; Main Key

**CONNECTOR PANEL**
DIF-2 Board ········ B-233
Processor Interface (Video)
IF-207 Board ········ B-241
Processor Interface (Audio & System)
LO-06 Board ········ B-249
CUE/TC I/O & Audio Monitor Amplifier

**POWER SUPPLY**
SP-01 Board ········ B-257
Switching Regulator
SP-02 Board ········ B-267
Switching Regulator
SP-03 Board ········ B-277
Switching Regulator
KRV-060 ········ B-287
Power Supply Unit

**MOTHER BOARD & FRAME WIRING**
MB-199 Board ; Mother Board ········ B-291
Frame Wiring (Tape Transport) ········ B-325
CH-22 Board ; CUE/TC/CTL Erase Head
CN-186 Board ; Fan Motor Relaying
DE-18 Board ; Tension Sensor
HD-06 Board ; Full Erase Head
MC-29 Board ; Threading Sensor
PS-143 Board ; Front Cover/Tape Sensor
Frame Wiring (Level Control Panel) ········ B-339
SW-270 Board ; Sub Switch Board
Frame Wiring (Function Control Panel) ········ B-347
Frame Wiring (Connector Panel) ········ B-351
SE-49 Board ; Remote-1, 2 Interface
Frame Wiring (Power Supply) ········ B-363
AC-92 Board ; Power Switch Relaying

**C. SEMICONDUCTOR PIN ASSIGNMENTS**

Semiconductor Index ········ C-1
Diode ········ C-3
Transistor ········ C-4
IC ········ C-5

## D. REPLACEABLE PARTS & OPTIONAL FIXTURE

Notes on Repair Parts ······ D-1

Front Panel Assembly ······ D-2
Reel Table Assembly ······ D-5
Guides & Tension Arm Assembly ······ D-7
PC Board on Front ······ D-9
Head Drum Assembly ······ D-11
Movable Guide Assembly ······ D-13
Stationary Head Assembly ······ D-16
Capstan & Pinch Roller Assembly ······ D-19
Level Control Panel Assembly ······ D-21
Control Panel Assembly ······ D-23
Control Panel Bracket & PC Board Assembly ··· D-24
Power Supply Assembly ······ D-27
Connector Panel Assembly ······ D-29
Tape Transport Rear Assembly ······ D-31

Nonpolar Capacitor ······ D-33
Electrolytic Capacitor ······ D-34
Resistor ······ D-34

AC-92 Board ······ D-36
AP-22 Board ······ D-36
AU-109 Board ······ D-39
CD-37 Board ······ D-42
CH-23 Board ······ D-44
CN-186 Board ······ D-44
DE-18 Board ······ D-44
DET-3 Board ······ D-45
DIF-2 Board ······ D-45
DP-63 Board ······ D-47
DRC-1 Board ······ D-47
DS-19 Board ······ D-54
EN-55 Board ······ D-56
EX-136 Board ······ D-56
FE-05 Board ······ D-57
HD-06 Board ······ D-57
IF-207 Board ······ D-57
KC-14 Board ······ D-58
KY-139 Board ······ D-59
LDR-2 Board ······ D-61
LDR-3 Board ······ D-62
LO-06 Board ······ D-63
MB-199 Board ······ D-64
MC-29 Board ······ D-65
PRD-1 Board ······ D-65
PS-143 Board ······ D-71
RM-43 Board ······ D-72
SE-49 Board ······ D-75
SP-01 Board ······ D-75
SP-02 Board ······ D-78
SP-03 Board ······ D-80
SR-37 Board ······ D-82
SR-44 Board ······ D-82
SV-90 Board ······ D-83
SW-269 Board ······ D-86
SW-270 Board ······ D-88
SY-103 Board ······ D-89
UDR-1 Board ······ D-91
UDR-2 Board ······ D-92
UDR-3 Board ······ D-94
VH-20 Board ······ D-94
VR-74 Board ······ D-95

Frame ······ D-96
Packing Materials & Supplied Accessories ····· D-99
Optional Fixture ······ D-100

## E. CHANGED PARTS

# SECTION A
# BLOCK DIAGRAM

## AUDIO SIGNAL SYSTEM OVERALL BLOCK DIAGRAM

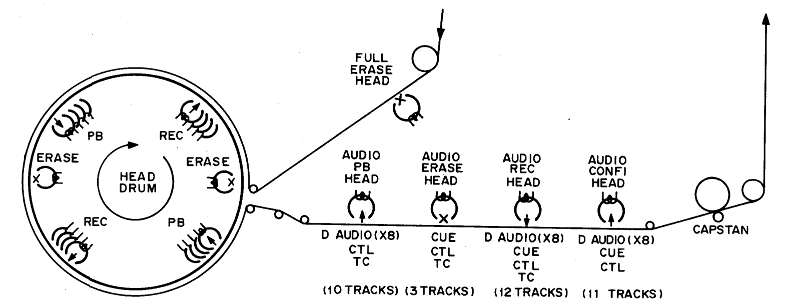

FULL ERASE HEAD
PB
REC
ERASE
HEAD DRUM
ERASE
REC
PB
AUDIO PB HEAD
AUDIO ERASE HEAD
AUDIO REC HEAD
AUDIO CONFI HEAD
D AUDIO(X8) CTL TC
CUE CTL TC
D AUDIO(X8) CUE CTL TC
D AUDIO(X8) CUE CTL
(10 TRACKS)
(3 TRACKS)
(12 TRACKS)
(11 TRACKS)
CAPSTAN

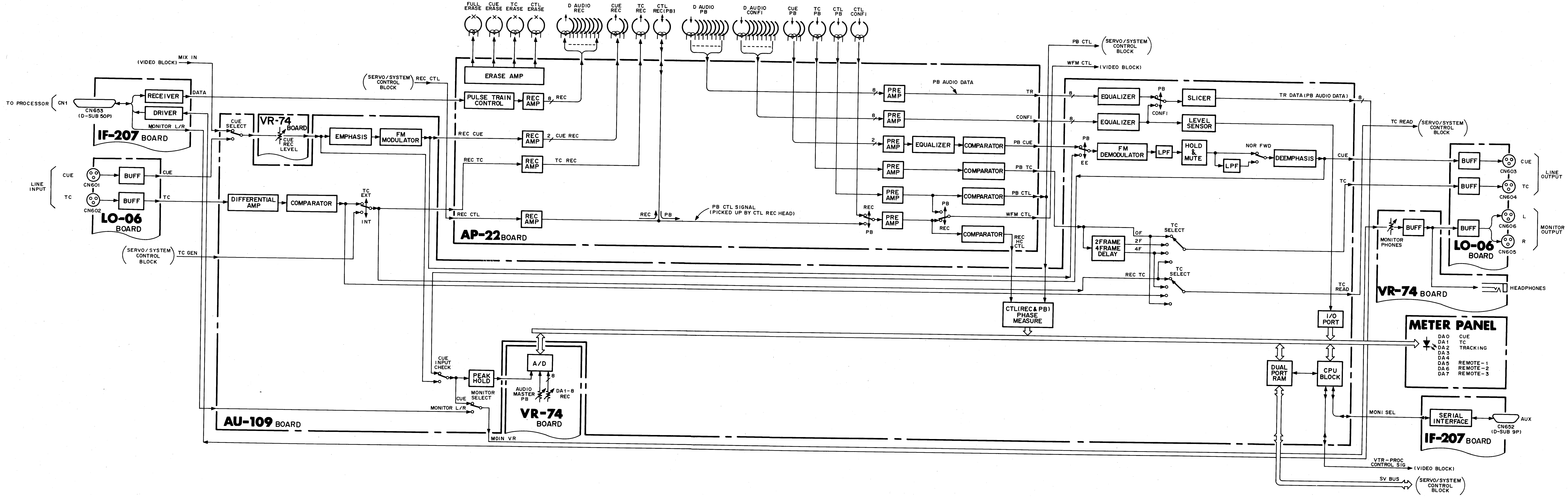

FULL ERASE
CUE ERASE
TC ERASE
CTL ERASE
D AUDIO REC
CUE REC
TC REC
CTL REC(PB)
D AUDIO PB
D AUDIO CONFI
CUE PB
TC PB
CTL PB
CTL CONFI
MIX IN
(VIDEO BLOCK)
TO PROCESSOR
CN1
CN653
(D-SUB 50P)
RECEIVER
DRIVER
DATA
MONITOR L/R
IF-207 BOARD
LINE INPUT
CUE
TC
CN601
CN602
BUFF
BUFF
CUE
TC
LO-06 BOARD
(SERVO/SYSTEM CONTROL BLOCK)
TC GEN
CUE SELECT
VR-74 BOARD
CUE REC LEVEL
EMPHASIS
FM MODULATOR
DIFFERENTIAL AMP
COMPARATOR
TC EXT
INT
(SERVO/SYSTEM CONTROL BLOCK)
REC CTL
ERASE AMP
PULSE TRAIN CONTROL
REC AMP
8
REC
REC CUE
REC AMP
2
CUE REC
REC TC
REC AMP
TC REC
REC CTL
REC AMP
REC
PB
PB CTL SIGNAL (PICKED UP BY CTL REC HEAD)
AP-22 BOARD
PB AUDIO DATA
8
PRE AMP
8
PRE AMP
2
PRE AMP
EQUALIZER
COMPARATOR
PRE AMP
COMPARATOR
PRE AMP
COMPARATOR
REC
PB
PRE AMP
PB
REC
COMPARATOR
TR
CONFI
PB CUE
PB TC
PB CTL
WFM CTL
REC HC CTL
PB CTL
(SERVO/SYSTEM CONTROL BLOCK)
WFM CTL
(VIDEO BLOCK)
CTL(REC & PB) PHASE MEASURE
CUE INPUT CHECK
PEAK HOLD
A/D
8
AUDIO MASTER PB
DA1-8 REC
CUE
MONITOR SELECT
MONITOR L/R
VR-74 BOARD
MOIN VR
AU-109 BOARD
8
EQUALIZER
PB
CONFI
SLICER
8
EQUALIZER
LEVEL SENSOR
TR DATA (PB AUDIO DATA)
8
PB
EE
FM DEMODULATOR
LPF
HOLD & MUTE
LPF
NOR FWD
DEEMPHASIS
CUE
TC
OF
2F
4F
2FRAME 4FRAME DELAY
TC SELECT
REC TC
TC SELECT
TC READ
TC READ
(SERVO/SYSTEM CONTROL BLOCK)
I/O PORT
DUAL PORT RAM
CPU BLOCK
MONI SEL
VTR-PROC CONTROL SIG
(VIDEO BLOCK)
SV BUS
(SERVO/SYSTEM CONTROL BLOCK)
BUFF
BUFF
BUFF
CN603
CN604
CN606
CN605
CUE
TC
LINE OUTPUT
L
R
MONITOR OUTPUT
MONITOR PHONES
BUFF
LO-06 BOARD
HEADPHONES
VR-74 BOARD
METER PANEL
DA0 CUE
DA1 TC
DA2 TRACKING
DA3
DA4
DA5 REMOTE-1
DA6 REMOTE-2
DA7 REMOTE-3
SERIAL INTERFACE
AUX
CN652 (D-SUB 9P)
IF-207 BOARD

**AUDIO SIGNAL SYSTEM**
OVERALL BLOCK DIAGRAM
HDD-1000

## VIDEO SIGNAL SYSTEM OVERALL BLOCK DIAGRAM

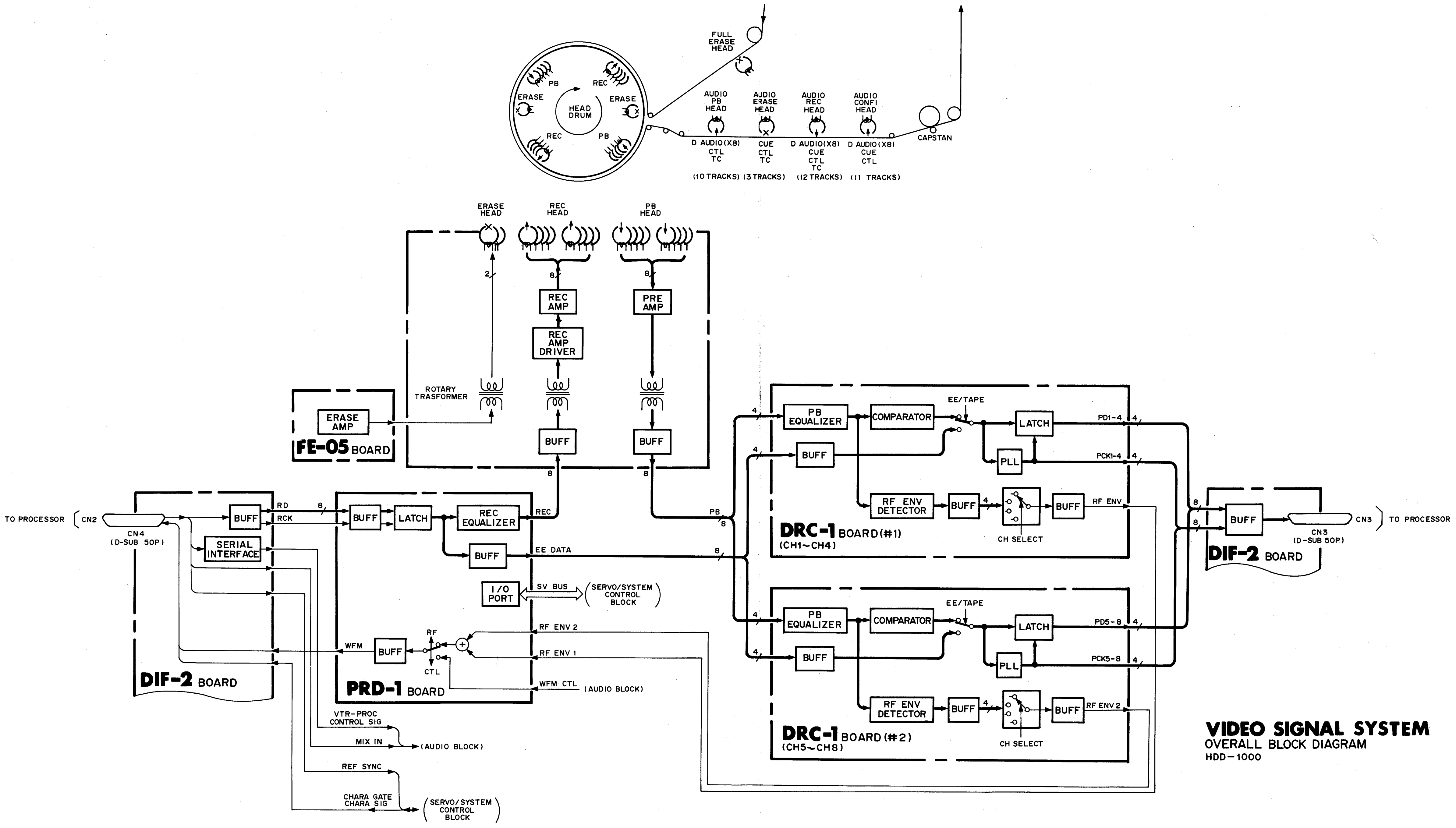
FULL ERASE HEAD
PB
REC
ERASE
HEAD DRUM
ERASE
REC
PB
AUDIO PB HEAD
AUDIO ERASE HEAD
AUDIO REC HEAD
AUDIO CONFI HEAD
CAPSTAN
D AUDIO(X8) CTL TC
CUE CTL TC
D AUDIO(X8) CUE CTL TC
D AUDIO(X8) CUE CTL
(10 TRACKS)
(3 TRACKS)
(12 TRACKS)
(11 TRACKS)
ERASE HEAD
REC HEAD
PB HEAD
2
8
8
REC AMP
PRE AMP
REC AMP DRIVER
ROTARY TRASFORMER
ERASE AMP
FE-05 BOARD
BUFF
BUFF
8
8
TO PROCESSOR
CN2
CN4 (D-SUB 50P)
BUFF
SERIAL INTERFACE
RD
RCK
8
BUFF
LATCH
REC EQUALIZER
REC
BUFF
EE DATA
I/O PORT
SV BUS
SERVO/SYSTEM CONTROL BLOCK
WFM
BUFF
RF
CTL
RF ENV 2
RF ENV 1
WFM CTL
(AUDIO BLOCK)
DIF-2 BOARD
PRD-1 BOARD
VTR-PROC CONTROL SIG
MIX IN
(AUDIO BLOCK)
REF SYNC
CHARA GATE
CHARA SIG
SERVO/SYSTEM CONTROL BLOCK
PB
8
8
4
PB EQUALIZER
COMPARATOR
EE/TAPE
LATCH
PD1-4
4
4
BUFF
PLL
PCK1-4
4
RF ENV DETECTOR
BUFF
4
BUFF
RF ENV
CH SELECT
DRC-1 BOARD(#1)
(CH1~CH4)
4
PB EQUALIZER
COMPARATOR
EE/TAPE
LATCH
PD5-8
4
4
BUFF
PLL
PCK5-8
4
RF ENV DETECTOR
BUFF
4
BUFF
RF ENV 2
CH SELECT
DRC-1 BOARD(#2)
(CH5~CH8)
8
8
BUFF
CN3
CN3 (D-SUB 50P)
TO PROCESSOR
DIF-2 BOARD

**VIDEO SIGNAL SYSTEM**
OVERALL BLOCK DIAGRAM
HDD-1000

## SERVO/SYSTEM CONTROL OVERALL BLOCK DIAGRAM

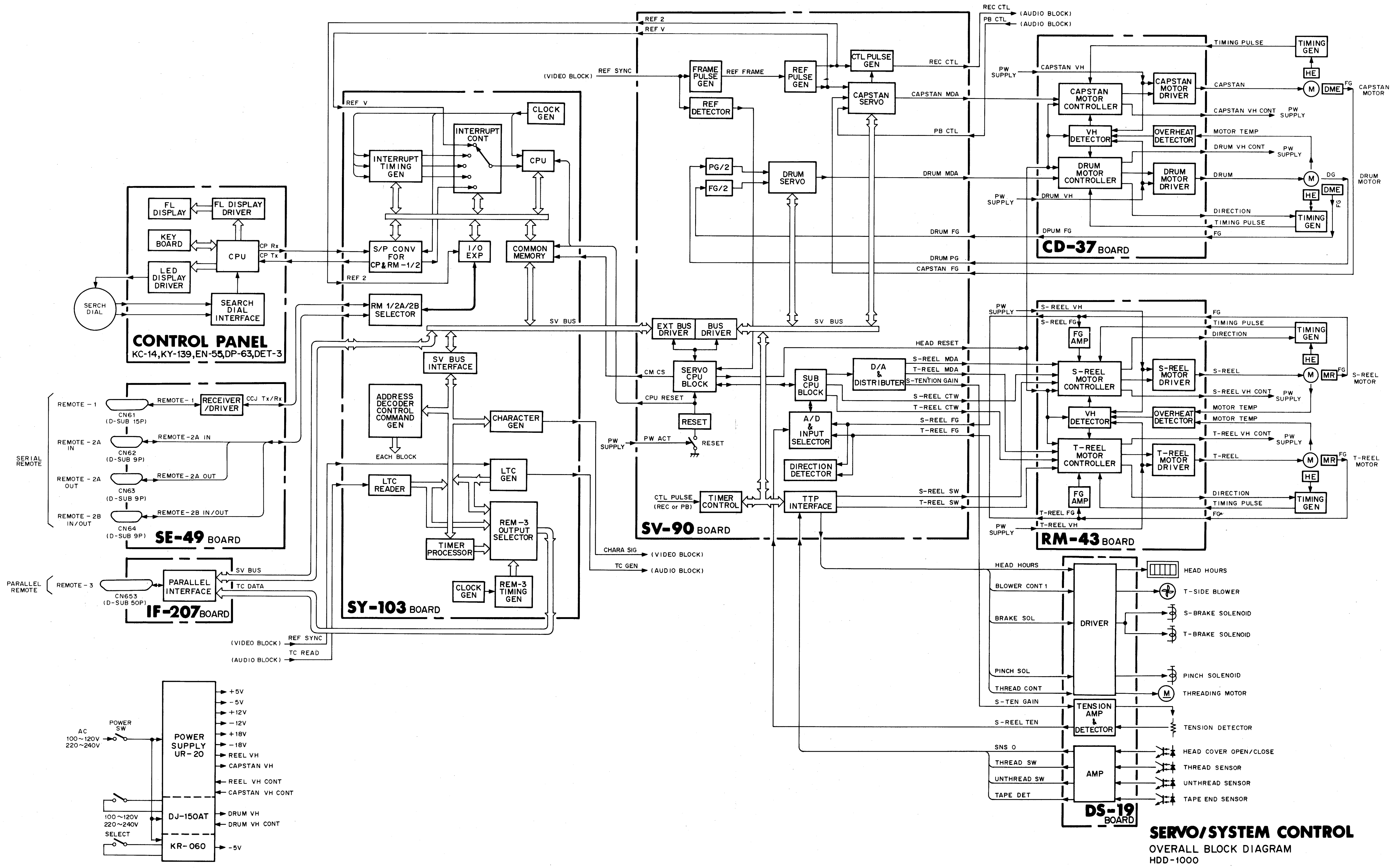
CONTROL PANEL
KC-14, KY-139, EN-55, DP-63, DET-3
FL DISPLAY
FL DISPLAY DRIVER
KEY BOARD
CPU
CP Rx
CP Tx
LED DISPLAY DRIVER
SERCH DIAL
SEARCH DIAL INTERFACE
SE-49 BOARD
SERIAL REMOTE
REMOTE - 1
CN61 (D-SUB 15P)
RECEIVER /DRIVER
CCJ Tx/Rx
REMOTE - 2A IN
CN62 (D-SUB 9P)
REMOTE - 2A OUT
CN63 (D-SUB 9P)
REMOTE - 2B IN/OUT
CN64 (D-SUB 9P)
PARALLEL REMOTE
REMOTE - 3
CN653 (D-SUB 50P)
PARALLEL INTERFACE
SV BUS
TC DATA
IF-207 BOARD
REF V
REF 2
CLOCK GEN
INTERRUPT CONT
INTERRUPT TIMING GEN
CPU
S/P CONV FOR CP&RM-1/2
I/O EXP
COMMON MEMORY
RM 1/2A/2B SELECTOR
SV BUS INTERFACE
ADDRESS DECODER CONTROL COMMAND GEN
EACH BLOCK
CHARACTER GEN
LTC GEN
LTC READER
REM-3 OUTPUT SELECTOR
TIMER PROCESSOR
CLOCK GEN
REM-3 TIMING GEN
SY-103 BOARD
CHARA SIG
(VIDEO BLOCK)
TC GEN
(AUDIO BLOCK)
REF SYNC
(VIDEO BLOCK)
TC READ
(AUDIO BLOCK)
REF 2
REF V
(VIDEO BLOCK)
REF SYNC
FRAME PULSE GEN
REF FRAME
REF PULSE GEN
REF DETECTOR
CTL PULSE GEN
REC CTL
CAPSTAN SERVO
CAPSTAN MDA
PB CTL
PG/2
FG/2
DRUM SERVO
DRUM MDA
DRUM FG
DRUM PG
CAPSTAN FG
SV BUS
EXT BUS DRIVER
BUS DRIVER
CM CS
SERVO CPU BLOCK
CPU RESET
RESET
PW SUPPLY
PW ACT
RESET
CTL PULSE (REC or PB)
TIMER CONTROL
TTP INTERFACE
SUB CPU BLOCK
D/A & DISTRIBUTER
A/D & INPUT SELECTOR
DIRECTION DETECTOR
HEAD RESET
S-REEL MDA
T-REEL MDA
S-TENTION GAIN
S-REEL CTW
T-REEL CTW
S-REEL FG
T-REEL FG
S-REEL SW
T-REEL SW
SV-90 BOARD
REC CTL
(AUDIO BLOCK)
PB CTL
(AUDIO BLOCK)
PW SUPPLY
CAPSTAN VH
CAPSTAN MOTOR CONTROLLER
CAPSTAN MOTOR DRIVER
VH DETECTOR
OVERHEAT DETECTOR
DRUM MOTOR CONTROLLER
DRUM MOTOR DRIVER
DRUM VH
DPUM FG
CD-37 BOARD
TIMING PULSE
TIMING GEN
HE
CAPSTAN
M
DME
FG
CAPSTAN MOTOR
CAPSTAN VH CONT
PW SUPPLY
MOTOR TEMP
DRUM VH CONT
PW SUPPLY
DRUM
DG
DRUM MOTOR
DIRECTION
TIMING PULSE
FG
S-REEL VH
S-REEL FG
FG AMP
S-REEL MOTOR CONTROLLER
S-REEL MOTOR DRIVER
VH DETECTOR
OVERHEAT DETECTOR
T-REEL MOTOR CONTROLLER
T-REEL MOTOR DRIVER
T-REEL FG
T-REEL VH
RM-43 BOARD
FG
TIMING PULSE
DIRECTION
S-REEL
MR
S-REEL MOTOR
S-REEL VH CONT
MOTOR TEMP
MOTOR TEMP
T-REEL VH CONT
T-REEL
T-REEL MOTOR
DIRECTION
TIMING PULSE
HEAD HOURS
BLOWER CONT 1
BRAKE SOL
PINCH SOL
THREAD CONT
S-TEN GAIN
S-REEL TEN
SNS 0
THREAD SW
UNTHREAD SW
TAPE DET
DRIVER
TENSION AMP & DETECTOR
AMP
DS-19 BOARD
HEAD HOURS
T-SIDE BLOWER
S-BRAKE SOLENOID
T-BRAKE SOLENOID
PINCH SOLENOID
THREADING MOTOR
TENSION DETECTOR
HEAD COVER OPEN/CLOSE
THREAD SENSOR
UNTHREAD SENSOR
TAPE END SENSOR
AC 100~120V 220~240V
POWER SW
POWER SUPPLY UR-20
+5V
-5V
+12V
-12V
+18V
-18V
REEL VH
CAPSTAN VH
REEL VH CONT
CAPSTAN VH CONT
100~120V 220~240V SELECT
DJ-150AT
DRUM VH
DRUM VH CONT
KR-060
-5V

**SERVO/SYSTEM CONTROL**
OVERALL BLOCK DIAGRAM
HDD-1000

## AP-22 BOARD

Audio/Cue/TC/CTL REC/PB Amplifier and Erase Amplifier

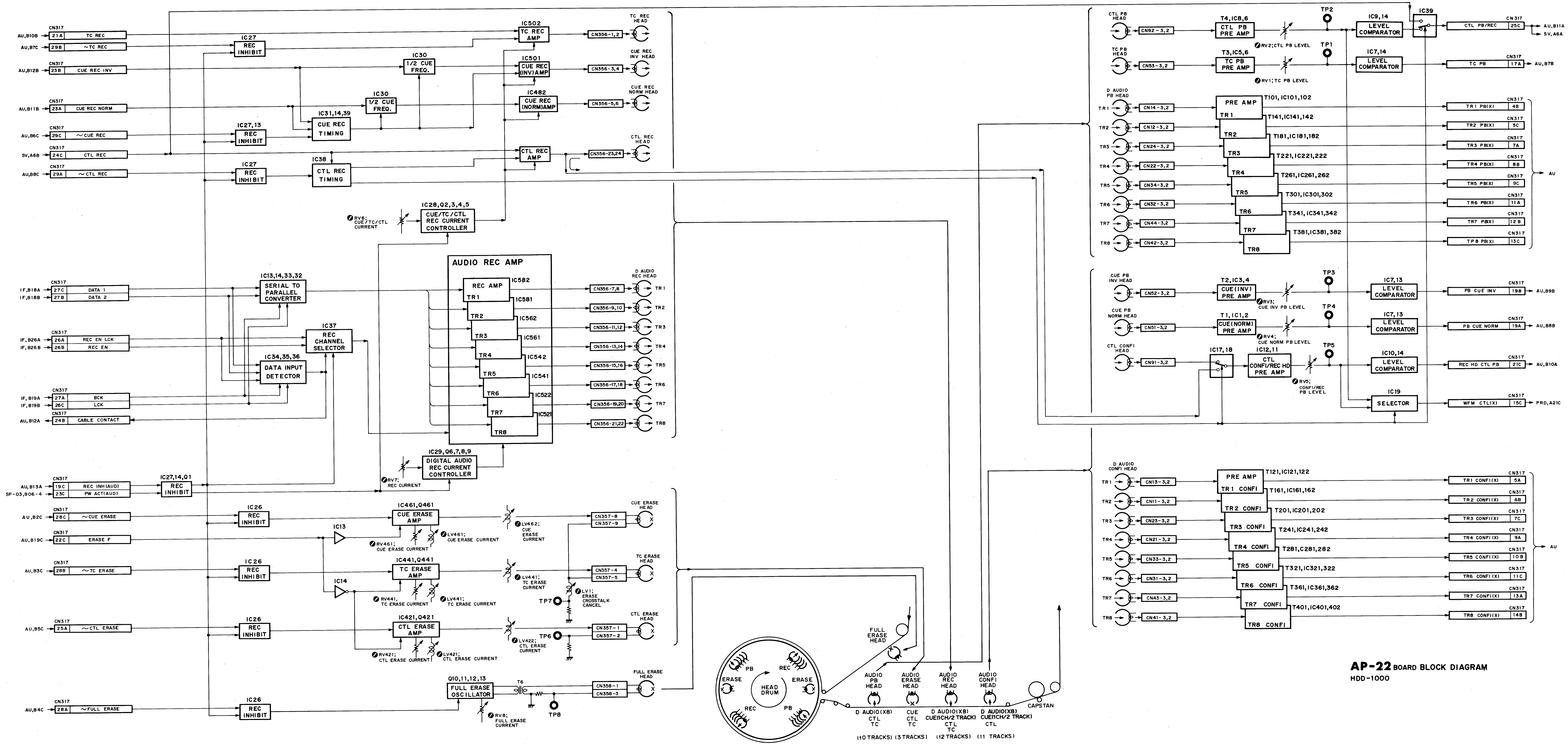
CN317
AU,B10B 21A TC REC
AU,B7C 29B ~TC REC
AU,B12B 23B CUE REC INV
AU,B11B 23A CUE REC NORM
AU,B6C 29C ~CUE REC
SV,A6B 24C CTL REC
AU,B8C 29A ~CTL REC
IC27 REC INHIBIT
IC27,13 REC INHIBIT
IC30 1/2 CUE FREQ.
IC31,14,39 CUE REC TIMING
IC38 CTL REC TIMING
IC502 TC REC AMP
IC501 CUE REC (INV) AMP
IC482 CUE REC (NORM) AMP
CTL REC AMP
CN356-1,2
CN356-3,4
CN356-5,6
CN356-23,24
TC REC HEAD
CUE REC INV HEAD
CUE REC NORM HEAD
CTL REC HEAD
RV6; CUE/TC/CTL CURRENT
IC28,Q2,3,4,5 CUE/TC/CTL REC CURRENT CONTROLLER
IF,B18A 27C DATA 1
IF,B18B 27B DATA 2
IC13,14,33,32 SERIAL TO PARALLEL CONVERTER
IF,B26A 26A REC EN LCK
IF,B26B 26B REC EN
IC37 REC CHANNEL SELECTOR
IC34,35,36 DATA INPUT DETECTOR
IF,B19A 27A BCK
IF,B19B 26C LCK
AU,B12A 24B CABLE CONTACT
AUDIO REC AMP
REC AMP TR1 IC582
TR2 IC581
TR3 IC562
TR4 IC561
TR5 IC542
TR6 IC541
TR7 IC522
TR8 IC521
CN356-7,8
CN356-9,10
CN356-11,12
CN356-13,14
CN356-15,16
CN356-17,18
CN356-19,20
CN356-21,22
D AUDIO REC HEAD
TR1 TR2 TR3 TR4 TR5 TR6 TR7 TR8
IC29,Q6,7,8,9 DIGITAL AUDIO REC CURRENT CONTROLLER
RV7; REC CURRENT
AU,B13A 19C REC INH(AUD)
SP-03,906-4 23C PW ACT(AUD)
IC27,14,Q1 REC INHIBIT
AU,B2C 28C ~CUE ERASE
AU,B19C 22C ERASE F
AU,B3C 28B ~TC ERASE
AU,B5C 25A ~CTL ERASE
AU,B4C 28A ~FULL ERASE
IC26 REC INHIBIT
IC13
IC14
IC461,Q461 CUE ERASE AMP
RV461; CUE ERASE CURRENT
LV461; CUE ERASE CURRENT
LV462; CUE ERASE CURRENT
IC441,Q441 TC ERASE AMP
RV441; TC ERASE CURRENT
LV441; TC ERASE CURRENT
LV1; ERASE CROSSTALK CANCEL
TP7
IC421,Q421 CTL ERASE AMP
RV421; CTL ERASE CURRENT
LV421; CTL ERASE CURRENT
LV422; CTL ERASE CURRENT
TP6
CN357-8
CN357-9
CN357-4
CN357-5
CN357-1
CN357-2
CUE ERASE HEAD
TC ERASE HEAD
CTL ERASE HEAD
Q10,11,12,13 FULL ERASE OSCILLATOR
T6
RV8; FULL ERASE CURRENT
TP8
CN358-1
CN358-3
FULL ERASE HEAD
PB REC ERASE ERASE HEAD DRUM REC PB
FULL ERASE HEAD
AUDIO PB HEAD
AUDIO ERASE HEAD
AUDIO REC HEAD
AUDIO CONFI HEAD
CAPSTAN
D AUDIO(X8) CTL TC
CUE CTL TC
D AUDIO(X8) CUE(1CH/2 TRACK) CTL TC
D AUDIO(X8) CUE(1CH/2 TRACK) CTL
(10 TRACKS) (3 TRACKS) (12 TRACKS) (11 TRACKS)
CTL PB HEAD
CN92-3,2
T4,IC8,6 CTL PB PRE AMP
RV2; CTL PB LEVEL
TP2
IC9,14 LEVEL COMPARATOR
IC39
CN317 CTL PB/REC 25C AU,B11A SV,A6A
TC PB HEAD
CN53-3,2
T3,IC5,6 TC PB PRE AMP
RV1; TC PB LEVEL
TP1
IC7,14 LEVEL COMPARATOR
TC PB 17A AU,B7B
D AUDIO PB HEAD
CN14-3,2
CN12-3,2
CN24-3,2
CN22-3,2
CN34-3,2
CN32-3,2
CN44-3,2
CN42-3,2
PRE AMP TR1 T101,IC101,102
T141,IC141,142
TR2 T181,IC181,182
TR3 T221,IC221,222
TR4 T261,IC261,262
TR5 T301,IC301,302
TR6 T341,IC341,342
TR7 T381,IC381,382
TR8
TR1 PB(X) 4B
TR2 PB(X) 5C
TR3 PB(X) 7A
TR4 PB(X) 8B
TR5 PB(X) 9C
TR6 PB(X) 11A
TR7 PB(X) 12B
TR8 PB(X) 13C
AU
CUE PB INV HEAD
CN52-3,2
T2,IC3,4 CUE(INV) PRE AMP
RV3; CUE INV PB LEVEL
TP3
IC7,13 LEVEL COMPARATOR
PB CUE INV 19B AU,B9B
CUE PB NORM HEAD
CN51-3,2
T1,IC1,2 CUE(NORM) PRE AMP
RV4; CUE NORM PB LEVEL
TP4
IC7,13 LEVEL COMPARATOR
PB CUE NORM 19A AU,B8B
CTL CONFI HEAD
CN91-3,2
IC17,18
IC12,11 CTL CONFI/REC HD PRE AMP
RV5; CONFI/REC PB LEVEL
TP5
IC10,14 LEVEL COMPARATOR
REC HD CTL PB 21C AU,B10A
IC19 SELECTOR
WFM CTL(X) 15C PRD,A21C
D AUDIO CONFI HEAD
CN13-3,2
CN11-3,2
CN23-3,2
CN21-3,2
CN33-3,2
CN31-3,2
CN43-3,2
CN41-3,2
PRE AMP TR1 CONFI T121,IC121,122
T161,IC161,162
TR2 CONFI T201,IC201,202
TR3 CONFI T241,IC241,242
TR4 CONFI T281,C281,282
TR5 CONFI T321,IC321,322
TR6 CONFI T361,IC361,362
TR7 CONFI T401,IC401,402
TR8 CONFI
TR1 CONFI(X) 5A
TR2 CONFI(X) 6B
TR3 CONFI(X) 7C
TR4 CONFI(X) 9A
TR5 CONFI(X) 10B
TR6 CONFI(X) 11C
TR7 CONFI(X) 13A
TR8 CONFI(X) 14B
AU

**AP-22** BOARD BLOCK DIAGRAM
HDD-1000

## AU-109 BOARD (1/2)

Audio PB Equalizer and Cue Mod/Demod

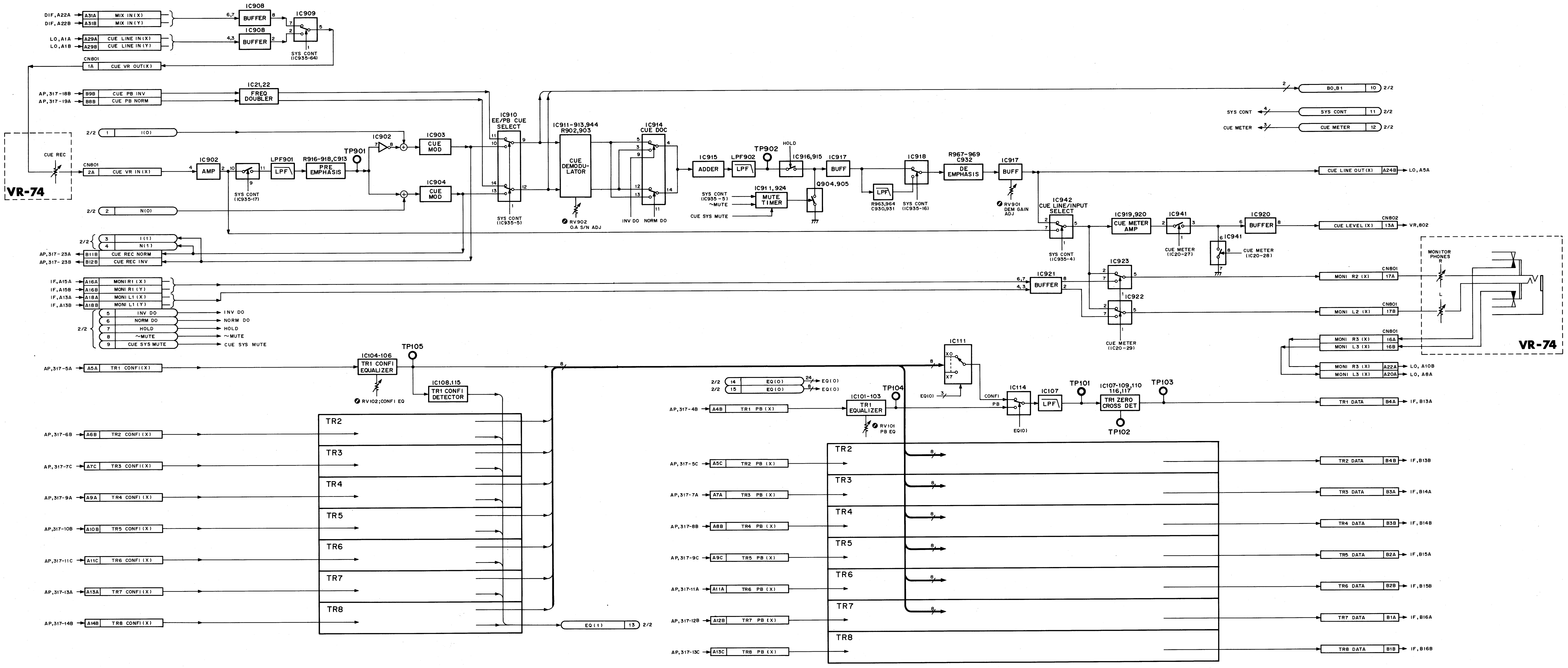
DIF, A22A
DIF, A22B
A31A MIX IN (X)
A31B MIX IN (Y)
LO, A1A
LO, A1B
A29A CUE LINE IN (X)
A29B CUE LINE IN (Y)
IC908 BUFFER
IC908 BUFFER
IC909
SYS CONT (IC935-64)
CN801
1A CUE VR OUT (X)
AP, 317-18B
AP, 317-19A
B9B CUE PB INV
B8B CUE PB NORM
IC21,22 FREQ DOUBLER
CUE REC
VR-74
CN801
2A CUE VR IN (X)
2/2 1 I(0)
2/2 2 N(0)
IC902 AMP
SYS CONT (IC935-17)
LPF901 LPF
R916-918,C913 PRE EMPHASIS
TP901
IC902
IC903 CUE MOD
IC904 CUE MOD
IC910 EE/PB CUE SELECT
SYS CONT (IC935-5)
IC911-913,944 R902,903
CUE DEMODU-LATOR
RV902 O.A S/N ADJ
IC914 CUE DOC
INV DO
NORM DO
IC915 ADDER
LPF902 LPF
TP902
HOLD
IC916,915
IC917 BUFF
SYS CONT (IC935-5)
~MUTE
CUE SYS MUTE
IC911,924 MUTE TIMER
Q904,905
R963,964 C930,931
LPF
IC918
SYS CONT (IC935-16)
R967-969 C932
DE EMPHASIS
IC917 BUFF
RV901 DEM GAIN ADJ
IC942 CUE LINE/INPUT SELECT
SYS CONT (IC935-4)
IC919,920 CUE METER AMP
IC941
CUE METER (IC20-27)
IC941
CUE METER (IC20-28)
IC920 BUFFER
B0,B1 10 2/2
SYS CONT
SYS CONT 11 2/2
CUE METER
CUE METER 12 2/2
CUE LINE OUT (X) A24B
LO, A5A
CN802
CUE LEVEL (X) 13A
VR,802
2/2 3 I(1)
4 N(1)
AP, 317-23A
AP, 317-23B
B11B CUE REC NORM
B12B CUE REC INV
IF, A15A
IF, A15B
IF, A13A
IF, A13B
A16A MONI R1 (X)
A16B MONI R1 (Y)
A18A MONI L1 (X)
A18B MONI L1 (Y)
2/2
5 INV DO
6 NORM DO
7 HOLD
8 ~MUTE
9 CUE SYS MUTE
INV DO
NORM DO
HOLD
~MUTE
CUE SYS MUTE
IC921 BUFFER
IC923
IC922
CUE METER (IC20-29)
CN801
MONI R2 (X) 17A
CN801
MONI L2 (X) 17B
MONITOR PHONES
R
L
VR-74
CN801
MONI R3 (X) 16A
MONI L3 (X) 16B
MONI R3 (X) A22A
MONI L3 (X) A20A
LO, A10B
LO, A8A
AP, 317-5A
A5A TR1 CONFI (X)
TP105
IC104-106 TR1 CONFI EQUALIZER
RV102 CONFI EQ
IC108,115 TR1 CONFI DETECTOR
IC111
X0
X7
2/2 14 EQ(0)
2/2 15 EQ(0)
EQ(0)
EQ(0)
EQ(0)
AP, 317-4B
A4B TR1 PB (X)
IC101-103 TR1 EQUALIZER
RV101 PB EQ
TP104
CONFI
PB
IC114
EQ(0)
IC107 LPF
TP101
IC107-109,110 116,117
TR1 ZERO CROSS DET
TP102
TP103
TR1 DATA B4A
IF, B13A
AP, 317-6B A6B TR2 CONFI (X)
AP, 317-7C A7C TR3 CONFI (X)
AP, 317-9A A9A TR4 CONFI (X)
AP, 317-10B A10B TR5 CONFI (X)
AP, 317-11C A11C TR6 CONFI (X)
AP, 317-13A A13A TR7 CONFI (X)
AP, 317-14B A14B TR8 CONFI (X)
TR2
TR3
TR4
TR5
TR6
TR7
TR8
EQ(1) 13 2/2
AP, 317-5C A5C TR2 PB (X)
AP, 317-7A A7A TR3 PB (X)
AP, 317-8B A8B TR4 PB (X)
AP, 317-9C A9C TR5 PB (X)
AP, 317-11A A11A TR6 PB (X)
AP, 317-12B A12B TR7 PB (X)
AP, 317-13C A13C TR8 PB (X)
TR2 DATA B4B IF, B13B
TR3 DATA B3A IF, B14A
TR4 DATA B3B IF, B14B
TR5 DATA B2A IF, B15A
TR6 DATA B2B IF, B15B
TR7 DATA B1A IF, B16A
TR8 DATA B1B IF, B16B
8

**AU-109(1/2)** BOARD BLOCK DIAGRAM
HDD-1000

## AU-109 BOARD (2/2)

CPU and TC Selector

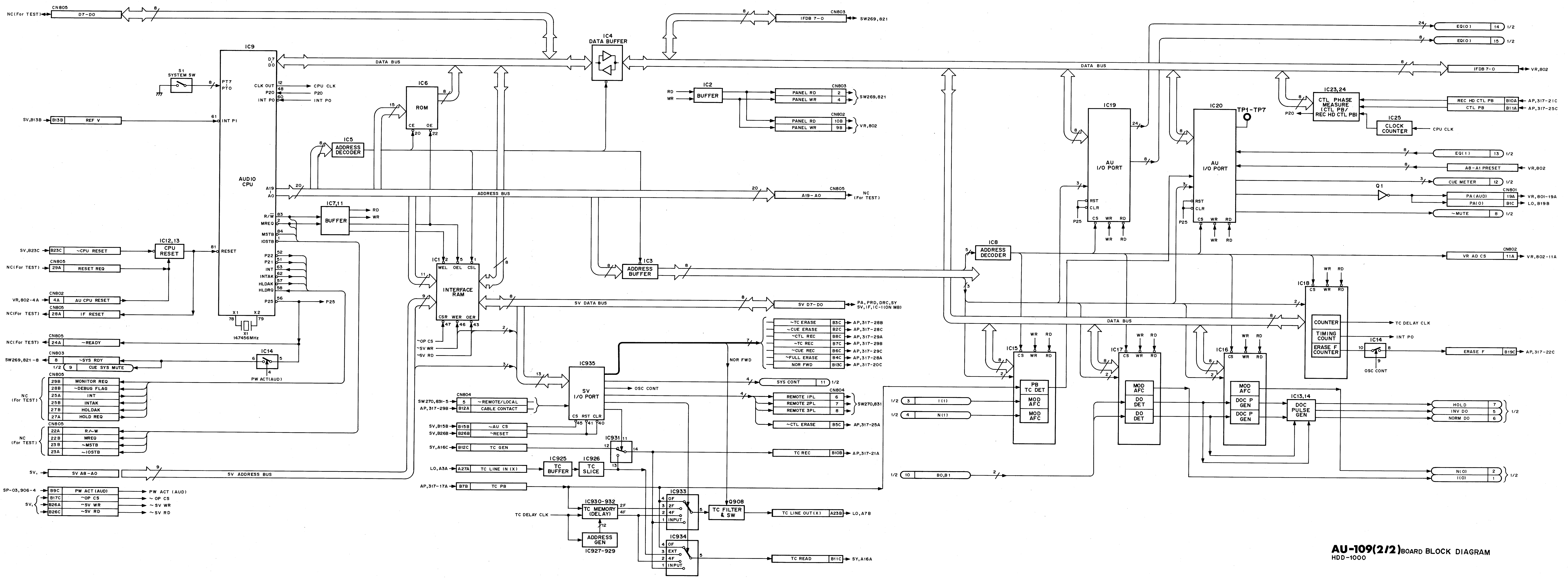
IC9
AUDIO CPU
S1 SYSTEM SW
PT7 PT0
CLK OUT
P20
INT P0
INT P1
RESET
X1 X2
147456MHz
DATA BUS
ADDRESS BUS
IC4 DATA BUFFER
IC6 ROM
CE OE
IC5 ADDRESS DECODER
IC7,11 BUFFER
RD WR
IC1 INTERFACE RAM
WEL OEL CSL
CSR WER OER
IC12,13 CPU RESET
IC14
PW ACT(AUD)
IC3 ADDRESS BUFFER
IC2 BUFFER
SV DATA BUS
SV ADDRESS BUS
IC935 SV I/O PORT
CS RST CLR
OSC CONT
IC931
IC925 TC BUFFER
IC926 TC SLICE
IC930-932 TC MEMORY (DELAY)
IC927-929 ADDRESS GEN
TC DELAY CLK
IC933
IC934
0F 2F 4F INPUT EXT
Q908 TC FILTER & SW
NOR FWD
CN805 D7-D0 NC(For TEST)
CN803 IFDB 7-0 SW269,821
PANEL RD PANEL WR SW269,821
CN802 PANEL RD PANEL WR VR,802
CN805 A19-A0 NC (For TEST)
SV,B13B REF V
SV,B23C ~CPU RESET
CN805 29A RESET REQ NC(For TEST)
CN802 4A AU CPU RESET VR,802-4A
CN805 28A IF RESET NC(For TEST)
CN805 24A ~READY NC(For TEST)
CN803 8 ~SYS RDY SW269,821-8
1/2 9 CUE SYS MUTE
CN805 MONITOR REQ ~DEBUG FLAG INT INTAK HOLDAK HOLD REQ NC (For TEST)
CN805 R/~W MREQ ~MSTB ~IOSTB NC (For TEST)
SV, SV A8-A0
SP-03,906-4 B9C PW ACT(AUD)
SV, B17C ~OP CS B26A ~SV WR B26C ~SV RD
PW ACT (AUD) ~OP CS ~SV WR ~SV RD
SV D7-D0 PA,PRD,DRC,SY SV,IF,IC-I(ON MB)
~TC ERASE B3C AP,317-28B
~CUE ERASE B2C AP,317-28C
~CTL REC B8C AP,317-29A
~TC REC B7C AP,317-29B
~CUE REC B6C AP,317-29C
~FULL ERASE B4C AP,317-28A
NOR FWD B13C AP,317-20C
SYS CONT 11 1/2
CN804 REMOTE 1PL 6 REMOTE 2PL 7 REMOTE 3PL 8 SW270,831
~CTL ERASE B5C AP,317-25A
CN804 5 ~REMOTE/LOCAL B12A CABLE CONTACT SW270,831-5 AP,317-29B
SV,B15B ~AU CS SV,B26B ~RESET
SV,A16C B12C TC GEN
TC REC B10B AP,317-21A
LO,A3A A27A TC LINE IN (X)
AP,317-17A B7B TC PB
TC LINE OUT(X) A23B LO,A7B
TC READ B11C SY,A16A
IC8 ADDRESS DECODER
IC19 AU I/O PORT
IC20 AU I/O PORT
TP1-TP7
RST CLR P25
CS WR RD
EQ(0) 14 1/2
EQ(0) 15 1/2
IFDB 7-0 VR,802
IC23,24 CTL PHASE MEASURE (CTL PB/ REC HD CTL PB)
REC HD CTL PB B10A AP,317-21C
CTL PB B11A AP,317-25C
IC25 CLOCK COUNTER CPU CLK
EQ(1) 13 1/2
A8-A1 PRESET VR,802
CUE METER 12 1/2
Q1
CN801 PA(AUD) 19A VR,801-19A
PA(0) B1C LO,B19B
~MUTE 8 1/2
CN802 VR AD CS 11A VR,802-11A
IC18 COUNTER TIMING COUNT ERASE F COUNTER
TC DELAY CLK
INT P0
IC14 OSC CONT
ERASE F B19C AP,317-22C
IC15 PB TC DET MOD AFC MOD AFC
IC17 MOD AFC DO DET DO DET
IC16 MOD AFC DOC P GEN DOC P GEN
IC13,14 DOC PULSE GEN
HOLD 7 INV DO 5 NORM DO 6 1/2
1/2 3 I(1)
1/2 4 N(1)
1/2 10 B0,B1
N(0) 2 I(0) 1 1/2

**AU-109(2/2)** BOARD BLOCK DIAGRAM
HDD-1000

## **PRD-1** BOARD
Video REC Equalizer

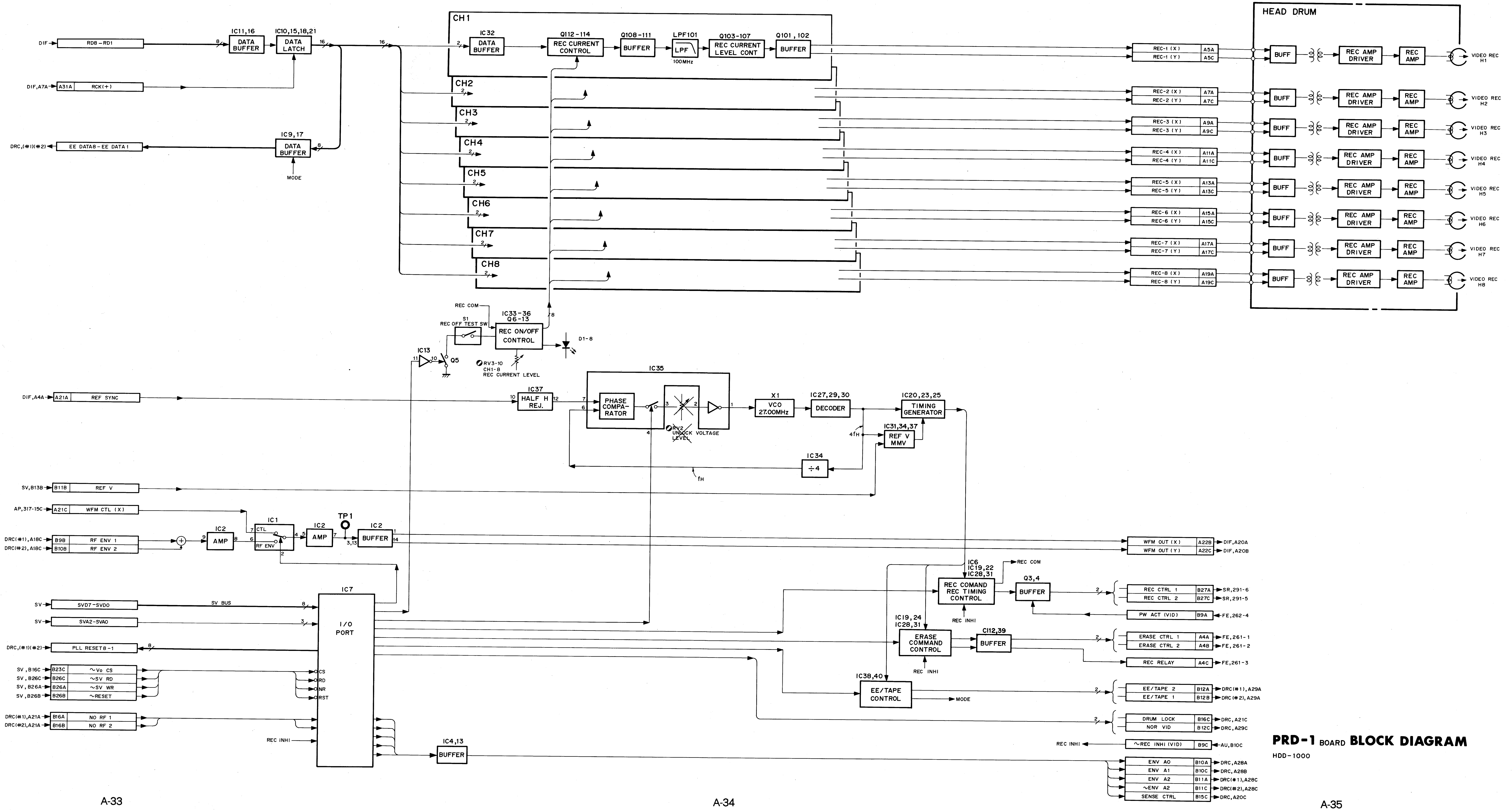
DIF
RD8-RD1
DIF,A7A
A31A
RCK(+)
DRC,(#1)(#2)
EE DATA8-EE DATA1
IC11,16
DATA BUFFER
IC10,15,18,21
DATA LATCH
IC9,17
DATA BUFFER
MODE
16
8
CH1
CH2
CH3
CH4
CH5
CH6
CH7
CH8
IC32
DATA BUFFER
Q112-114
REC CURRENT CONTROL
Q108-111
BUFFER
LPF101
LPF
100MHz
Q103-107
REC CURRENT LEVEL CONT
Q101,102
BUFFER
REC-1 (X)
REC-1 (Y)
A5A
A5C
REC-2 (X)
REC-2 (Y)
A7A
A7C
REC-3 (X)
REC-3 (Y)
A9A
A9C
REC-4 (X)
REC-4 (Y)
A11A
A11C
REC-5 (X)
REC-5 (Y)
A13A
A13C
REC-6 (X)
REC-6 (Y)
A15A
A15C
REC-7 (X)
REC-7 (Y)
A17A
A17C
REC-8 (X)
REC-8 (Y)
A19A
A19C
HEAD DRUM
BUFF
REC AMP DRIVER
REC AMP
VIDEO REC H1
VIDEO REC H2
VIDEO REC H3
VIDEO REC H4
VIDEO REC H5
VIDEO REC H6
VIDEO REC H7
VIDEO REC H8
REC COM
S1
REC OFF TEST SW
IC33-36
Q6-13
REC ON/OFF CONTROL
D1-8
IC13
Q5
RV3-10
CH1-8
REC CURRENT LEVEL
DIF,A4A
A21A
REF SYNC
IC37
HALF H REJ.
IC35
PHASE COMPA-RATOR
RV2
UNLOCK LEVEL
VOLTAGE
X1
VCO
27.00MHz
IC27,29,30
DECODER
IC20,23,25
TIMING GENERATOR
4fH
IC31,34,37
REF V MMV
IC34
÷4
fH
SV,B13B
B11B
REF V
AP,317-15C
A21C
WFM CTL (X)
DRC(#1),A18C
DRC(#2),A18C
B9B
B10B
RF ENV 1
RF ENV 2
IC2
AMP
IC1
CTL
RF ENV
IC2
AMP
TP1
IC2
BUFFER
WFM OUT (X)
WFM OUT (Y)
A22B
A22C
DIF,A20A
DIF,A20B
SV
SVD7-SVD0
SV BUS
SV
SVA2-SVA0
DRC,(#1)(#2)
PLL RESET8-1
SV,B16C
SV,B26C
SV,B26A
SV,B26B
B23C
B26C
B26A
B26B
~Vo CS
~SV RD
~SV WR
~RESET
CS
RD
WR
RST
DRC(#1),A21A
DRC(#2),A21A
B16A
B16B
NO RF 1
NO RF 2
REC INHI
IC7
I/O PORT
IC4,13
BUFFER
IC6
IC19,22
IC28,31
REC COMAND REC TIMING CONTROL
REC COM
REC INHI
Q3,4
BUFFER
REC CTRL 1
REC CTRL 2
B27A
B27C
SR,291-6
SR,291-5
PW ACT (VID)
B9A
FE,262-4
IC19,24
IC28,31
ERASE COMMAND CONTROL
REC INHI
CI12,39
BUFFER
ERASE CTRL 1
ERASE CTRL 2
A4A
A4B
FE,261-1
FE,261-2
REC RELAY
A4C
FE,261-3
IC38,40
EE/TAPE CONTROL
MODE
EE/TAPE 2
EE/TAPE 1
B12A
B12B
DRC(#1),A29A
DRC(#2),A29A
DRUM LOCK
NOR VID
B16C
B12C
DRC,A21C
DRC,A29C
REC INHI
~REC INHI (VID)
B9C
AU,B10C
ENV A0
ENV A1
ENV A2
~ENV A2
SENSE CTRL
B10A
B10C
B11A
B11C
B15C
DRC,A28A
DRC,A28B
DRC(#1),A28C
DRC(#2),A28C
DRC,A20C

## **PRD-1** BOARD **BLOCK DIAGRAM**
HDD-1000

## DRC-1 BOARD

Video PB Equalizer and PB Clock PLL

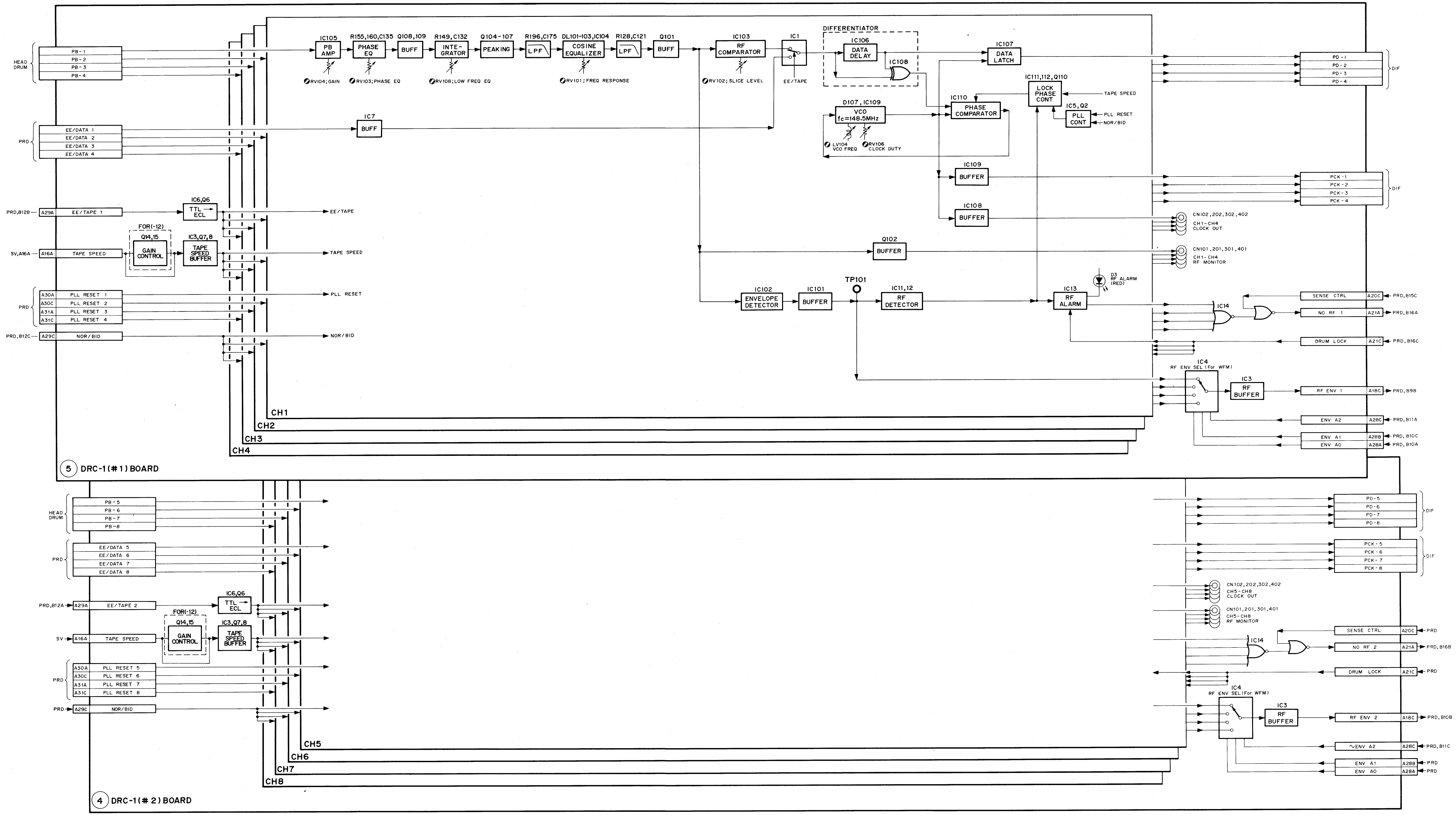
HEAD DRUM
PB-1
PB-2
PB-3
PB-4
PRD
EE/DATA 1
EE/DATA 2
EE/DATA 3
EE/DATA 4
PRD,B12B
A29A
EE/TAPE 1
IC6,Q6
TTL → ECL
EE/TAPE
FOR(-12)
Q14,15
GAIN CONTROL
IC3,Q7,8
TAPE SPEED BUFFER
SV,A16A
A16A
TAPE SPEED
PRD
A30A
A30C
A31A
A31C
PLL RESET 1
PLL RESET 2
PLL RESET 3
PLL RESET 4
PLL RESET
PRD,B12C
A29C
NOR/BID
IC105
PB AMP
RV104; GAIN
R155,160,C135
PHASE EQ
RV103; PHASE EQ
Q108,109
BUFF
R149,C132
INTE-GRATOR
RV108; LOW FREQ EQ
Q104-107
PEAKING
R196,C175
LPF
DL101-103,IC104
COSINE EQUALIZER
RV101; FREQ RESPONSE
R128,C121
LPF
Q101
BUFF
IC7
BUFF
IC103
RF COMPARATOR
RV102; SLICE LEVEL
IC1
EE/TAPE
DIFFERENTIATOR
IC106
DATA DELAY
IC108
IC107
DATA LATCH
IC111,112,Q110
LOCK PHASE CONT
TAPE SPEED
IC5,Q2
PLL CONT
PLL RESET
NOR/BID
IC110
PHASE COMPARATOR
D107, IC109
VCO
fc=148.5MHz
LV104 VCO FREQ
RV106 CLOCK DUTY
IC109
BUFFER
IC108
BUFFER
Q102
BUFFER
TP101
IC102
ENVELOPE DETECTOR
IC101
BUFFER
IC11,12
RF DETECTOR
IC13
RF ALARM
D3
RF ALARM
(RED)
PD-1
PD-2
PD-3
PD-4
DIF
PCK-1
PCK-2
PCK-3
PCK-4
DIF
CN102,202,302,402
CH1-CH4
CLOCK OUT
CN101,201,301,401
CH1-CH4
RF MONITOR
IC14
SENSE CTRL
A20C
PRD,B15C
NO RF 1
A21A
PRD,B16A
DRUM LOCK
A21C
PRD,B16C
IC4
RF ENV SEL (For WFM)
IC3
RF BUFFER
RF ENV 1
A18C
PRD,B9B
ENV A2
A28C
PRD,B11A
ENV A1
A28B
PRD,B10C
ENV A0
A28A
PRD,B10A
CH1
CH2
CH3
CH4
5 DRC-1(#1) BOARD
HEAD DRUM
PB-5
PB-6
PB-7
PB-8
PRD
EE/DATA 5
EE/DATA 6
EE/DATA 7
EE/DATA 8
PRD,B12A
A29A
EE/TAPE 2
IC6,Q6
TTL → ECL
FOR(-12)
Q14,15
GAIN CONTROL
IC3,Q7,8
TAPE SPEED BUFFER
SV
A16A
TAPE SPEED
PRD
A30A
A30C
A31A
A31C
PLL RESET 5
PLL RESET 6
PLL RESET 7
PLL RESET 8
PRD
A29C
NOR/BID
PD-5
PD-6
PD-7
PD-8
DIF
PCK-5
PCK-6
PCK-7
PCK-8
DIF
CN102,202,302,402
CH5-CH8
CLOCK OUT
CN101,201,301,401
CH5-CH8
RF MONITOR
IC14
SENSE CTRL
A20C
PRD
NO RF 2
A21A
PRD, B16B
DRUM LOCK
A21C
PRD
IC4
RF ENV SEL (For WFM)
IC3
RF BUFFER
RF ENV 2
A18C
PRD, B10B
∿ENV A2
A28C
PRD, B11C
ENV A1
A28B
PRD
ENV A0
A28A
PRD
CH5
CH6
CH7
CH8
4 DRC-1(#2) BOARD

**DRC-1** BOARD **BLOCK DIAGRAM**

HDD-1000

**SV-90, CD-37, RM-43, DS-19 BOARD** Servo/Logic Control

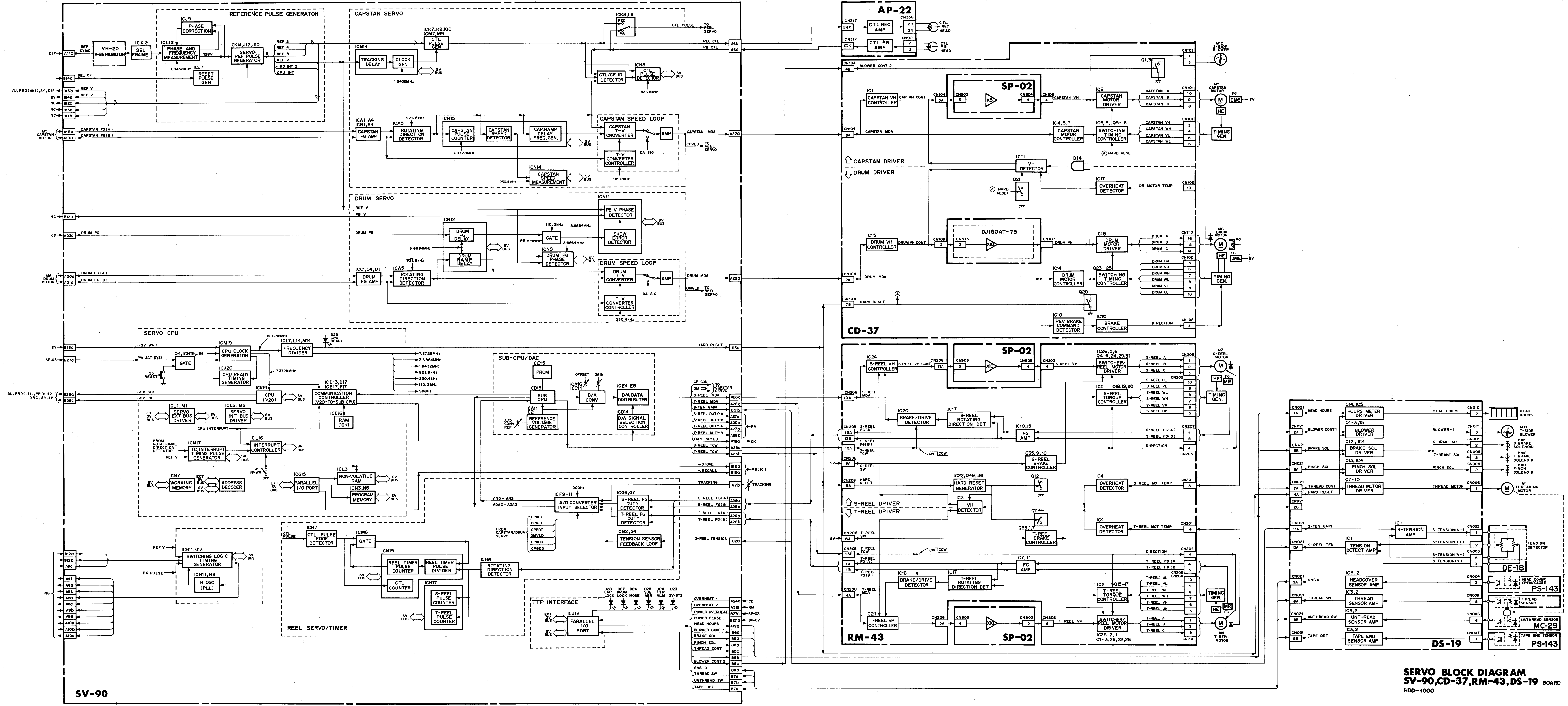
REFERENCE PULSE GENERATOR
VH-20 V-SEPARATOR
SEL FRAME
PHASE AND FREQUENCY MEASUREMENT
PHASE CORRECTION
RESET PULSE GEN
SERVO REF PULSE GENERATOR
CAPSTAN SERVO
TRACKING DELAY
CLOCK GEN
CTL PULSE GEN
CTL/CF ID DETECTOR
CTL PULSE DETECTOR
CAPSTAN FG AMP
ROTATING DIRECTION DETECTOR
CAPSTAN PULSE COUNTER
CAPSTAN SPEED DETECTOR
CAP.RAMP DELAY FREQ.GEN.
CAPSTAN SPEED LOOP
CAPSTAN T-V CONVERTER
T-V CONVERTER CONTROLLER
AMP
CAPSTAN SPEED MEASUREMENT
DRUM SERVO
PB V PHASE DETECTOR
SKEW ERROR DETECTOR
DRUM PG DELAY
DRUM RAMP DELAY
GATE
DRUM PG PHASE DETECTOR
DRUM FG AMP
DRUM SPEED LOOP
DRUM T-V CONVERTER
SERVO CPU
CPU CLOCK GENERATOR
FREQUENCY DIVIDER
CPU READY TIMING GENERATOR
CPU (V20)
COMMUNICATION CONTROLLER (V20-TO-SUB CPU)
RAM (16K)
SERVO EXT BUS DRIVER
SERVO INT BUS DRIVER
TC,INTERRUPT TIMING PULSE GENERATOR
INTERRUPT CONTROLLER
WORKING MEMORY
ADDRESS DECODER
PARALLEL I/O PORT
NON-VOLATILE RAM
PROGRAM MEMORY
SUB-CPU/DAC
PROM
SUB CPU
D/A CONV
D/A DATA DISTRIBUTER
REFERENCE VOLTAGE GENERATOR
D/A SELECTION CONTROLLER
A/D CONVERTER INPUT SELECTOR
S-REEL FG DUTY DETECTOR
T-REEL FG DUTY DETECTOR
TENSION SENSOR FEEDBACK LOOP
SWITCHING LOGIC TIMING GENERATOR
H OSC (PLL)
REEL SERVO/TIMER
CTL PULSE EDGE DETECTOR
REEL TIMER PULSE COUNTER
REEL TIMER PULSE DIVIDER
CTL COUNTER
S-REEL PULSE COUNTER
T-REEL PULSE COUNTER
ROTATING DIRECTION DETECTOR
TTP INTERFACE
PARALLEL I/O PORT
SV-90
AP-22
CTL REC AMP
CTL PB AMP
CTL REC HEAD
CTL PB HEAD
CD-37
CAPSTAN VH CONTROLLER
SP-02
CAPSTAN MOTOR DRIVER
CAPSTAN MOTOR CONTROLLER
SWITCHING TIMING CONTROLLER
VH DETECTOR
CAPSTAN DRIVER
DRUM DRIVER
OVERHEAT DETECTOR
DRUM VH CONTROLLER
DJ150AT-75
DRUM MOTOR DRIVER
DRUM MOTOR CONTROLLER
REV BRAKE COMMAND DETECTOR
BRAKE CONTROLLER
TIMING GEN.
M10 S-SIDE BLOWER
M5 CAPSTAN MOTOR
M6 DRUM MOTOR
RM-43
S-REEL VH CONTROLLER
SWITCHER/REEL MOTOR DRIVER
S-REEL TORQUE CONTROLLER
BRAKE/DRIVE DETECTOR
S-REEL ROTATING DIRECTION DET
FG AMP
S-REEL BRAKE CONTROLLER
HARD RESET GENERATOR
S-REEL DRIVER
T-REEL DRIVER
T-REEL BRAKE CONTROLLER
T-REEL ROTATING DIRECTION DET
T-REEL TORQUE CONTROLLER
T-REEL VH CONTROLLER
M3 S-REEL MOTOR
M4 T-REEL MOTOR
DS-19
HOURS METER DRIVER
BLOWER DRIVER
BRAKE SOL DRIVER
PINCH SOL DRIVER
THREAD MOTOR DRIVER
S-TENSION AMP
TENSION DETECT AMP
HEADCOVER SENSOR AMP
THREAD SENSOR AMP
UNTHREAD SENSOR AMP
TAPE END SENSOR AMP
HEAD HOURS
M11 T-SIDE BLOWER
PM1 S-BRAKE SOLENOID
PM2 T-BRAKE SOLENOID
PM3 PINCH SOLENOID
M1 THREADING MOTOR
DE-18 TENSION DETECTOR
PS-143
MC-29
PS-143

**SERVO BLOCK DIAGRAM**
**SV-90,CD-37,RM-43,DS-19** BOARD
HDD-1000

## KC-14, KY-139, DP-63, EN-55, DET-3 BOARD

Function Control Panel

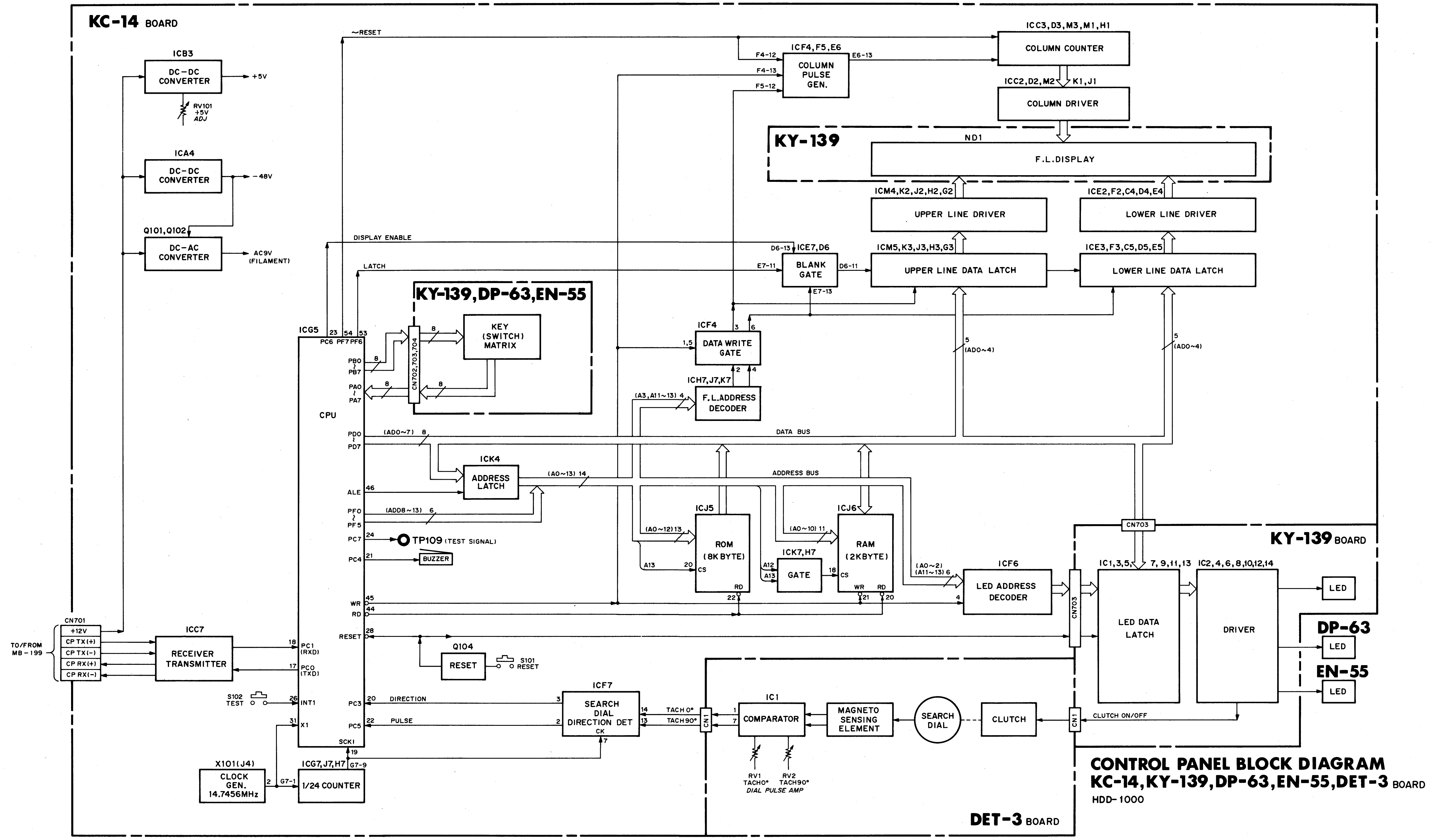
KC-14 BOARD
ICB3
DC-DC CONVERTER
+5V
RV101 +5V ADJ
ICA4
DC-DC CONVERTER
-48V
Q101,Q102
DC-AC CONVERTER
AC9V (FILAMENT)
~RESET
DISPLAY ENABLE
LATCH
ICC3,D3,M3,M1,H1
COLUMN COUNTER
ICF4,F5,E6
F4-12
F4-13
F5-12
E6-13
COLUMN PULSE GEN.
ICC2,D2,M2
K1,J1
COLUMN DRIVER
KY-139
ND1
F.L.DISPLAY
ICM4,K2,J2,H2,G2
UPPER LINE DRIVER
ICE2,F2,C4,D4,E4
LOWER LINE DRIVER
D6-13
ICE7,D6
E7-11
BLANK GATE
D6-11
E7-13
ICM5,K3,J3,H3,G3
UPPER LINE DATA LATCH
ICE3,F3,C5,D5,E5
LOWER LINE DATA LATCH
KY-139,DP-63,EN-55
KEY (SWITCH) MATRIX
CN702,703,704
ICG5
CPU
PC6 PF7 PF6
23 54 53
PB0 ~ PB7
PA0 ~ PA7
ICF4
1,5
DATA WRITE GATE
3 6 2 4
ICH7,J7,K7
(A3,A11~13) 4
F.L.ADDRESS DECODER
5 (AD0~4)
PD0 ~ PD7
(AD0~7) 8
DATA BUS
ICK4
ADDRESS LATCH
(A0~13) 14
ADDRESS BUS
ALE 46
PF0 ~ PF5
(AD8~13) 6
PC7 24
TP109 (TEST SIGNAL)
PC4 21
BUZZER
ICJ5
(A0~12) 13
A13
ROM (8K BYTE)
CS RD
ICK7,H7
A12 A13
GATE
ICJ6
(A0~10) 11
RAM (2KBYTE)
CS WR RD
ICF6
(A0~2) (A11~13) 6
LED ADDRESS DECODER
WR 45
RD 44
RESET 28
Q104
RESET
S101 RESET
CN701
+12V
CP TX(+)
CP TX(-)
CP RX(+)
CP RX(-)
TO/FROM MB-199
ICC7
RECEIVER TRANSMITTER
PC1 (RXD) 18
PC0 (TXD) 17
S102 TEST
INT1 26
X1 31
PC3 20 DIRECTION
PC5 22 PULSE
SCK1 19
ICF7
SEARCH DIAL DIRECTION DET
CK
TACH 0°
TACH 90°
CN1
IC1
COMPARATOR
RV1 TACHO°
RV2 TACH90°
DIAL PULSE AMP
MAGNETO SENSING ELEMENT
SEARCH DIAL
CLUTCH
CLUTCH ON/OFF
X101(J4)
CLOCK GEN. 14.7456MHz
G7-1
ICG7,J7,H7
G7-9
1/24 COUNTER
DET-3 BOARD
CN703
KY-139 BOARD
IC1,3,5, 7,9,11,13
LED DATA LATCH
IC2,4,6,8,10,12,14
DRIVER
LED
DP-63
LED
EN-55
LED

**CONTROL PANEL BLOCK DIAGRAM**
**KC-14,KY-139,DP-63,EN-55,DET-3** BOARD
HDD-1000

## SY-103 BOARD (1/2)

Time Code Reader and Generator

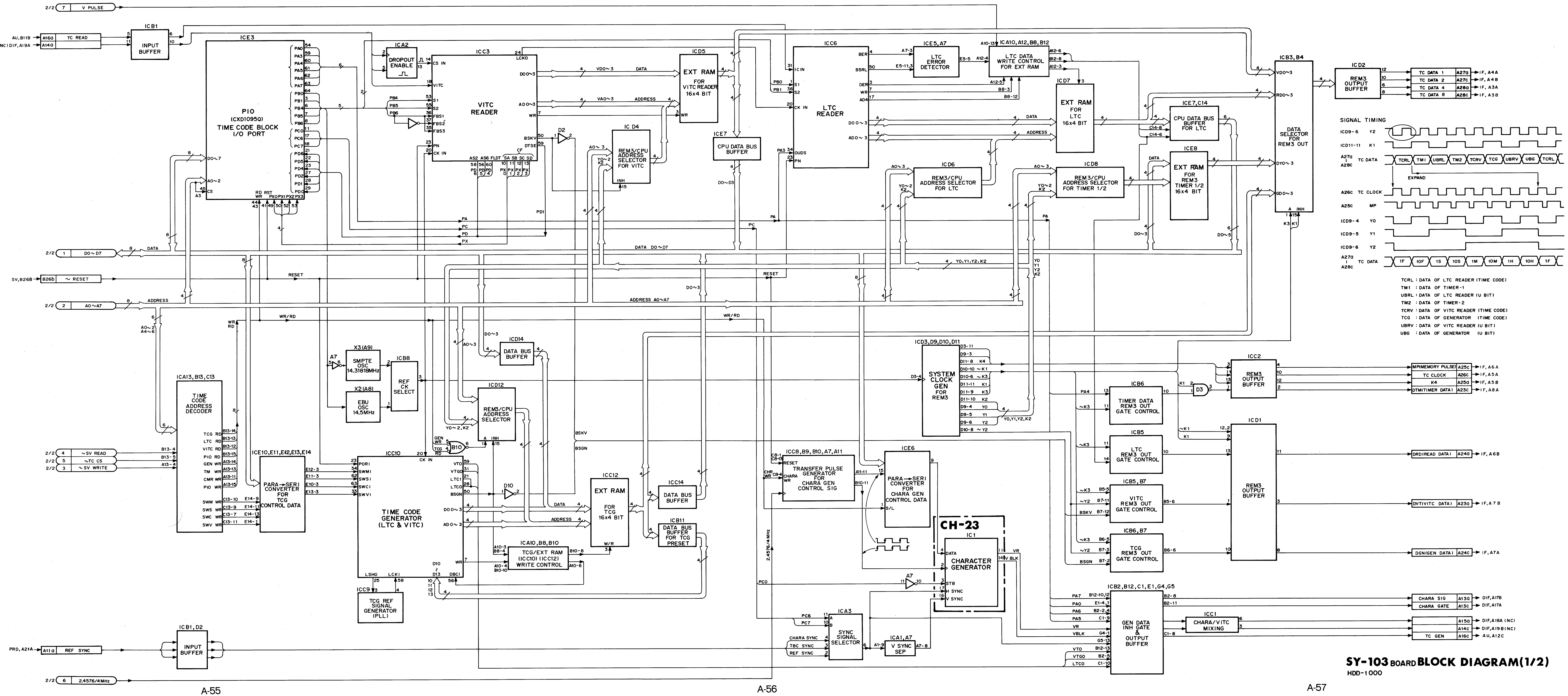
V PULSE
TC READ
ICB1 INPUT BUFFER
ICE3 PIO (CXD1095Q) TIME CODE BLOCK I/O PORT
ICA2 DROPOUT ENABLE
ICC3 VITC READER
ICD5 EXT RAM FOR VITC READER 16x4 BIT
IC D4 REM3/CPU ADDRESS SELECTOR FOR VITC
ICE7 CPU DATA BUS BUFFER
ICC6 LTC READER
ICE5,A7 LTC ERROR DETECTOR
ICA10,A12,B8,B12 LTC DATA WRITE CONTROL FOR EXT RAM
ICD7 EXT RAM FOR LTC 16x4 BIT
ICD6 REM3/CPU ADDRESS SELECTOR FOR LTC
ICD8 REM3/CPU ADDRESS SELECTOR FOR TIMER 1/2
ICE7,C14 CPU DATA BUS BUFFER FOR LTC
ICE8 EXT RAM FOR REM3 TIMER 1/2 16x4 BIT
ICB3,B4 DATA SELECTOR FOR REM3 OUT
ICD2 REM3 OUTPUT BUFFER
TC DATA 1
TC DATA 2
TC DATA 4
TC DATA 8
SIGNAL TIMING
ICD9-6 Y2
ICD11-11 K1
A27a A28c TC DATA
TCRL TM1 UBRL TM2 TCRV TCG UBRV UBG TCRL
EXPAND
A26c TC CLOCK
A25c MP
ICD9-4 Y0
ICD9-5 Y1
ICD9-6 Y2
A27a A28c TC DATA
1F 10F 1S 10S 1M 10M 1H 10H 1F
TCRL : DATA OF LTC READER (TIME CODE)
TM1 : DATA OF TIMER-1
UBRL : DATA OF LTC READER (U BIT)
TM2 : DATA OF TIMER-2
TCRV : DATA OF VITC READER (TIME CODE)
TCG : DATA OF GENERATOR (TIME CODE)
UBRV : DATA OF VITC READER (U BIT)
UBG : DATA OF GENERATOR (U BIT)
D0~D7
RESET
A0~A7
ICD14 DATA BUS BUFFER
X3(A9) SMPTE OSC 14.31818MHz
X2(A8) EBU OSC 14.5MHz
ICB8 REF CK SELECT
ICD12 REM3/CPU ADDRESS SELECTOR
ICA13,B13,C13 TIME CODE ADDRESS DECODER
~SV READ
~TC CS
~SV WRITE
ICE10,E11,E12,E13,E14 PARA→SERI CONVERTER FOR TCG CONTROL DATA
ICC10 TIME CODE GENERATOR (LTC & VITC)
ICC12 EXT RAM FOR TCG 16x4 BIT
ICC14 DATA BUS BUFFER
ICB11 DATA BUS BUFFER FOR TCG PRESET
ICA10,B8,B10 TCG/EXT RAM (ICC10) (ICC12) WRITE CONTROL
ICC9 TCG REF SIGNAL GENERATOR (PLL)
ICD3,D9,D10,D11 SYSTEM CLOCK GEN FOR REM3
ICC8,B9,B10,A7,A11 TRANSFER PULSE GENERATOR FOR CHARA GEN CONTROL SIG
ICE6 PARA→SERI CONVERTER FOR CHARA GEN CONTROL DATA
CH-23
IC1 CHARACTER GENERATOR
ICB6 TIMER DATA REM3 OUT GATE CONTROL
ICB5 LTC REM3 OUT GATE CONTROL
ICB5,B7 VITC REM3 OUT GATE CONTROL
ICB6,B7 TCG REM3 OUT GATE CONTROL
ICC2 REM3 OUTPUT BUFFER
ICD1 REM3 OUTPUT BUFFER
MP(MEMORY PULSE)
TC CLOCK
K4
DTM(TIMER DATA)
DRD(READ DATA)
DVT(VITC DATA)
DGN(GEN DATA)
ICB2,B12,C1,E1,G4,G5 GEN DATA INH GATE & OUTPUT BUFFER
ICC1 CHARA/VITC MIXING
CHARA SIG
CHARA GATE
TC GEN
ICA3 SYNC SIGNAL SELECTOR
ICA1,A7 V SYNC SEP
ICB1,D2 INPUT BUFFER
REF SYNC
2.4576/4MHz

**SY-103 BOARD BLOCK DIAGRAM(1/2)**

HDD-1000

## SY-103 BOARD (2/2) CPU

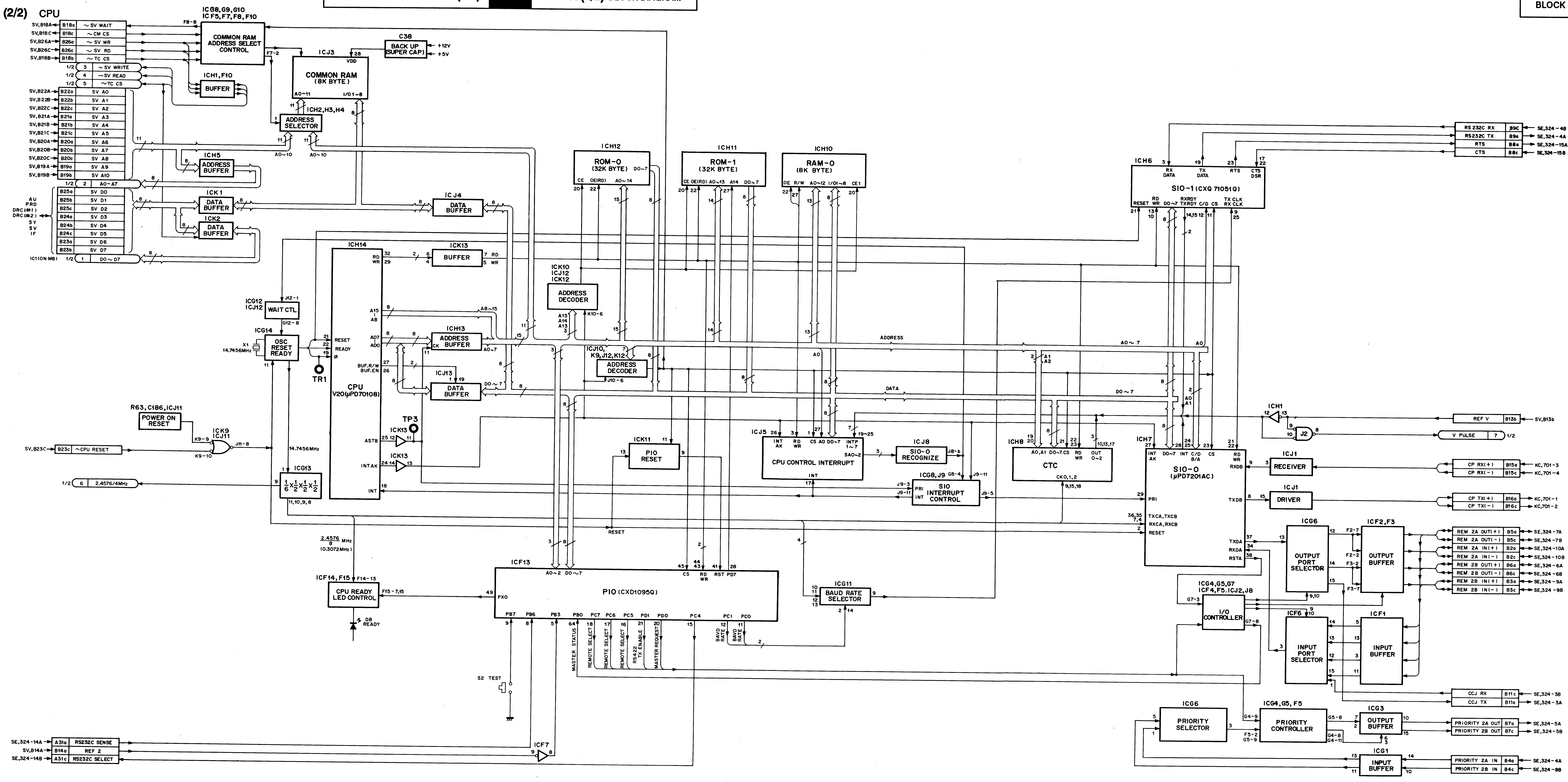
ICG8, G9, G10
ICF5, F7, F8, F10
COMMON RAM ADDRESS SELECT CONTROL
F8-8
F7-2
C38
BACK UP (SUPER CAP)
+12V
+5V
ICJ3
COMMON RAM (8K BYTE)
VDD
A0~11
I/O1~8
ICH1, F10
BUFFER
ICH2, H3, H4
ADDRESS SELECTOR
A0~10
ICH5
ADDRESS BUFFER
ICK1
DATA BUFFER
ICK2
DATA BUFFER
ICJ4
DATA BUFFER
SV,B18A B18a ~SV WAIT
SV,B18C B18c ~CM CS
SV,B26A B26a ~SV WR
SV,B26C B26c ~SV RD
SV,B18B B18b ~TC CS
1/2 3 ~SV WRITE
1/2 4 ~SV READ
1/2 5 ~TC CS
SV,B22A B22a SV A0
SV,B22B B22b SV A1
SV,B22C B22c SV A2
SV,B21A B21a SV A3
SV,B21B B21b SV A4
SV,B21C B21c SV A5
SV,B20A B20a SV A6
SV,B20B B20b SV A7
SV,B20C B20c SV A8
SV,B19A B19a SV A9
SV,B19B B19b SV A10
1/2 2 A0-A7
AU
PRD
DRC(#1)
DRC(#2)
SY
SV
IF
B25a SV D0
B25b SV D1
B25c SV D2
B24a SV D3
B24b SV D4
B24c SV D5
B23a SV D6
B23b SV D7
IC1(ON MB) 1/2 1 D0~D7
ICH14
CPU V20(μPD70108)
RD WR
RESET
READY
Ø
A15–A8
AD7–AD0
BUF.R/W
BUF.EN
ASTB
INTAK
INT
ICK13
BUFFER
RD
WR
ICG12
ICJ12
WAIT CTL
J12-1
G12-8
ICG14
OSC RESET READY
X1 14.7456MHz
TR1
TP3
ICH13
ADDRESS BUFFER
CK
A0~7
A8~15
ICJ13
DATA BUFFER
D0~7
R63, C186, ICJ11
POWER ON RESET
ICK9
ICJ11
K9-9
K9-10
J11-8
SV,B23C B23c ~CPU RESET
14.7456MHz
ICG13
1/6×1/2×1/2×1/2
11,10,9,8
1/2 6 2.4576/4MHz
2.4576/8 MHz (0.3072MHz)
ICF14, F15
F14-13
CPU READY LED CONTROL
F15-7,15
D8 READY
ICK10
ICJ12
ICK12
ADDRESS DECODER
A15 A14 A13
K10-6
ICJ10, K9, J12, K12
ADDRESS DECODER
J10-6
ICH12
ROM-0 (32K BYTE)
CE OE(RD) A0~14 D0~7
ICH11
ROM-1 (32K BYTE)
CE OE(RD) A0~13 A14 D0~7
ICH10
RAM-0 (8K BYTE)
OE R/W A0~12 I/O1~8 CE1
ADDRESS
DATA
A0~7
D0~7
ICK11
PIO RESET
RESET
ICJ5
CPU CONTROL INTERRUPT
INT AK
RD WR
CS A0 D0~7
INTP 1~7
SA0~2
INT
ICJ8
SIO-0 RECOGNIZE
J8-b
ICG8, J9
G8-4
J9-11
J9-3
SIO INTERRUPT CONTROL
PRI
INT
J9-5
ICH8
CTC
A0,A1 D0~7.CS RD WR OUT 0~2
CK0,1,2
9,15,18
10,13,17
ICF13
PIO (CXD1095Q)
A0~2 D0~7
CS RD WR RST PD7
PX0
PB7 PB6 PB3 PB0 PC7 PC6 PC5 PD1 PD0 PC4 PC1 PC0
MASTER STATUS
REMOTE SELECT
REMOTE SELECT
REMOTE SELECT
RS422 TX ENABLE
MASTER REQUEST
BAUD RATE
BAUD RATE
ICG11
BAUD RATE SELECTOR
S2 TEST
ICF7
SE,324-14A A31a RS232C SENSE
SV,B14A B14a REF 2
SE,324-14B A31c RS232C SELECT
ICH6
SIO-1 (CXQ71051Q)
RX DATA
TX DATA
RTS
CTS DSR
RESET
RD WR
D0~7
RXRDY TXRDY
C/D
CS
TX CLK RX CLK
RS232C RX B9C SE,324-4B
RS232C TX B9a SE,324-4A
RTS B8a SE,324-15A
CTS B8c SE,324-15B
A0
A1
ICH1
J2
REF V B13b SV,B13b
V PULSE 7 1/2
ICH7
SIO-0 (μPD7201AC)
INT AK
D0~7
INT
C/D B/A
CS
RD WR
RXDB
TXDB
PRI
TXCA,TXCB
RXCA,RXCB
RESET
TXDA
RXDA
RSTA
ICJ1
RECEIVER
CP RX(+) B15a KC,701-3
CP RX(-) B15c KC,701-4
ICJ1
DRIVER
CP TX(+) B16a KC,701-1
CP TX(-) B16c KC,701-2
ICG6
OUTPUT PORT SELECTOR
ICF2, F3
OUTPUT BUFFER
F2-7
F2-2
F3-2
F3-7
REM 2A OUT(+) B5a SE,324-7A
REM 2A OUT(-) B5c SE,324-7B
REM 2A IN(+) B2a SE,324-10A
REM 2A IN(-) B2c SE,324-10B
REM 2B OUT(+) B6a SE,324-6A
REM 2B OUT(-) B6c SE,324-6B
REM 2B IN(+) B3a SE,324-9A
REM 2B IN(-) B3c SE,324-9B
ICG4, G5, G7
ICF4, F5. ICJ2, J8
G7-3
I/O CONTROLLER
G7-8
ICF6
INPUT PORT SELECTOR
ICF1
INPUT BUFFER
CCJ RX B11c SE,324-3B
CCJ TX B11a SE,324-3A
ICG6
PRIORITY SELECTOR
ICG4, G5, F5
G4-9
PRIORITY CONTROLLER
F5-2
G5-9
G5-8
G4-8
G4-11
ICG3
OUTPUT BUFFER
PRIORITY 2A OUT B7a SE,324-5A
PRIORITY 2B OUT B7c SE,324-5B
ICG1
INPUT BUFFER
PRIORITY 2A IN B4a SE,324-4A
PRIORITY 2B IN B4c SE,324-8B

**SY-103 BOARD BLOCK DIAGRAM (2/2)**

HDD-1000

## SP-01, 02, 03 BOARD

Power Supply

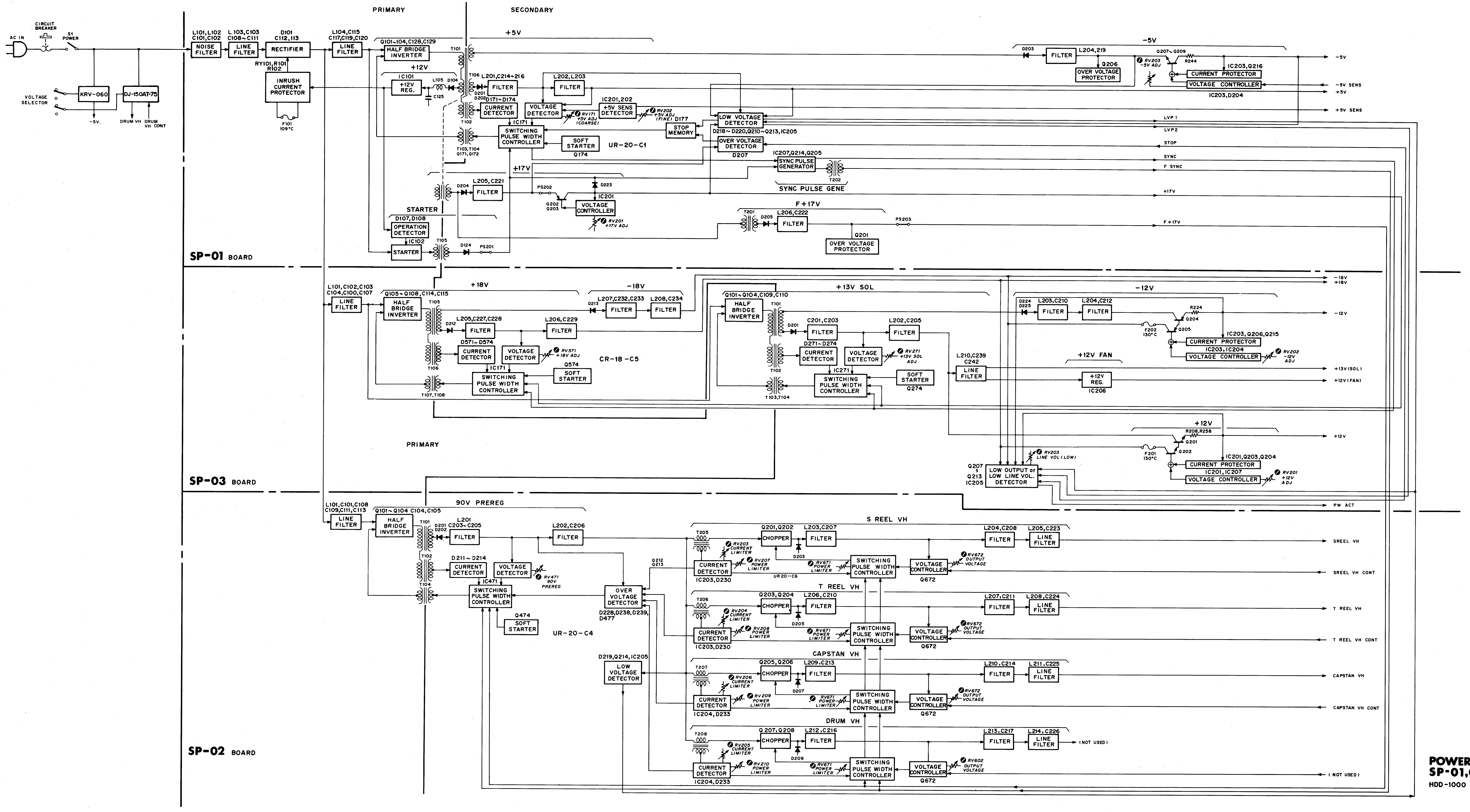
AC IN
CIRCUIT BREAKER
S1 POWER
VOLTAGE SELECTOR
KRV-060
DJ-150AT-75
-5V.
DRUM VH
DRUM VH CONT
PRIMARY
SECONDARY
L101,L102 C101,C102
NOISE FILTER
L 103,C103 C108~C111
LINE FILTER
D101 C112,113
RECTIFIER
RY101,R101 R102
INRUSH CURRENT PROTECTOR
F101 109°C
L104,C115 C117,C119,C120
LINE FILTER
Q101~104,C128,C129
HALF BRIDGE INVERTER
T101
+5V
+12V
IC101
+12V REG.
L105
D104
C125
T106
L201,C214~216
FILTER
D201 D202
D171~D174
CURRENT DETECTOR
T102
L202,L203
FILTER
VOLTAGE DETECTOR
RV171 +5V ADJ (COARSE)
IC201,202
+5V SENS DETECTOR
RV202 +5V ADJ (FINE)
D177
STOP MEMORY
IC171
SWITCHING PULSE WIDTH CONTROLLER
T103,T104 Q171,Q172
SOFT STARTER
Q174
UR-20-C1
LOW VOLTAGE DETECTOR
D218~D220,Q210~Q213,IC205
OVER VOLTAGE DETECTOR
D207
IC207,Q214,Q205
SYNC PULSE GENERATOR
T202
SYNC PULSE GENE
+17V
D204
L205,C221
FILTER
PS202
Q202 Q203
D223
IC201
VOLTAGE CONTROLLER
RV201 +17V ADJ
F+17V
T201
D205
L206,C222
FILTER
PS203
Q201
OVER VOLTAGE PROTECTOR
STARTER
D107,D108
OPERATION DETECTOR
IC102
STARTER
T105
D124
PS201
SP-01 BOARD
-5V
D203
FILTER
L204,219
Q206
OVER VOLTAGE PROTECTOR
RV203 -5V ADJ
Q207~Q209
R244
IC203,Q216
CURRENT PROTECTOR
VOLTAGE CONTROLLER
IC203,D204
-5V
-5V SENS
+5V
+5V SENS
LVP 1
LVP2
STOP
SYNC
F SYNC
+17V
F +17V
L101,C102,C103 C104,C100,C107
LINE FILTER
+18V
Q105~Q108,C114,C115
HALF BRIDGE INVERTER
T105
D212
L205,C227,C228
FILTER
L206,C229
FILTER
D571~D574
CURRENT DETECTOR
T106
VOLTAGE DETECTOR
RV571 +18V ADJ
IC171
SWITCHING PULSE WIDTH CONTROLLER
T107,T108
Q574
SOFT STARTER
CR-18-C5
-18V
D213
L207,C232,C233
FILTER
L208,C234
FILTER
+13V SOL
Q101~Q104,C109,C110
HALF BRIDGE INVERTER
T101
D201
C201,C203
FILTER
L202,C205
FILTER
D271~D274
CURRENT DETECTOR
T102
VOLTAGE DETECTOR
RV271 +13V SOL ADJ
IC271
SWITCHING PULSE WIDTH CONTROLLER
T103,T104
SOFT STARTER
Q274
L210,C239 C242
LINE FILTER
PRIMARY
-12V
D224 D225
L203,C210
FILTER
L204,C212
FILTER
R224
Q204
Q205
F202 130°C
IC203,Q206,Q215
CURRENT PROTECTOR
IC203,IC204
VOLTAGE CONTROLLER
RV202 -12V ADJ
+12V FAN
+12V REG.
IC206
-18V
+18V
-12V
+13V(SOL)
+12V(FAN)
+12V
R208,R258
Q201
Q202
F201 130°C
IC201,Q203,Q204
CURRENT PROTECTOR
IC201,IC207
VOLTAGE CONTROLLER
RV201 +12V ADJ
+12V
RV203 LINE VOL(LOW)
Q207 ~ Q213 IC205
LOW OUTPUT or LOW LINE VOL. DETECTOR
PW ACT
SP-03 BOARD
L101,C101,C108 C109,C111,C113
LINE FILTER
90V PREREG
Q101~Q104 C104,C105
HALF BRIDGE INVERTER
T101
D201 D202
L201 C203~C205
FILTER
L202,C206
FILTER
T102
D211~D214
CURRENT DETECTOR
VOLTAGE DETECTOR
RV471 90V PREREG
IC471
T104
SWITCHING PULSE WIDTH CONTROLLER
Q474
SOFT STARTER
UR-20-C4
OVER VOLTAGE DETECTOR
D228,D238,D239, D477
Q212 Q213
D219,Q214,IC205
LOW VOLTAGE DETECTOR
S REEL VH
T205
Q201,Q202
CHOPPER
L203,C207
FILTER
D203
RV203 CURRENT LIMITER
CURRENT DETECTOR
IC203,D230
RV207 POWER LIMITER
RV671 POWER LIMITER
UR20-C6
SWITCHING PULSE WIDTH CONTROLLER
VOLTAGE CONTROLLER
Q672
RV672 OUTPUT VOLTAGE
L204,C208
FILTER
L205,C223
LINE FILTER
SREEL VH
SREEL VH CONT
T REEL VH
T206
Q203,Q204
CHOPPER
L206,C210
FILTER
D205
RV204 CURRENT LIMITER
CURRENT DETECTOR
IC203,D230
RV208 POWER LIMITER
RV671 POWER LIMITER
SWITCHING PULSE WIDTH CONTROLLER
VOLTAGE CONTROLLER
Q672
RV672 OUTPUT VOLTAGE
L207,C211
FILTER
L208,C224
LINE FILTER
T REEL VH
T REEL VH CONT
CAPSTAN VH
T207
Q205,Q206
CHOPPER
L209,C213
FILTER
D207
RV206 CURRENT LIMITER
CURRENT DETECTOR
IC204,D233
RV209 POWER LIMITER
RV671 POWER LIMITER
SWITCHING PULSE WIDTH CONTROLLER
VOLTAGE CONTROLLER
Q672
RV672 OUTPUT VOLTAGE
L210,C214
FILTER
L211,C225
LINE FILTER
CAPSTAN VH
CAPSTAN VH CONT
DRUM VH
T208
Q 207,Q208
CHOPPER
L212,C216
FILTER
D209
RV205 CURRENT LIMITER
CURRENT DETECTOR
IC204,D233
RV210 POWER LIMITER
RV671 POWER LIMITER
SWITCHING PULSE WIDTH CONTROLLER
VOLTAGE CONTROLLER
Q672
RV602 OUTPUT VOLTAGE
L213,C217
FILTER
L214,C226
LINE FILTER
(NOT USED)
(NOT USED)
SP-02 BOARD

## POWER SUPPLY BLOCK DIAGRAM
## SP-01,02,03 BOARD

HDD-1000

# SECTION B
# SCHEMATIC DIAGRAM & BOARD LAYOUT

| | Board | Function | Page |
|---|---|---|---|
| A | AC-92 | Power Switch Relaying | B-361 |
| | AP-22 | Audio/CUE/TC/CTL REC/PB Amplifier and Erase Amplifier | B-129 |
| | AU-109 | Audio PB EQ, CUE Mod/Demod and CPU | B-87 |
| C | CD-37 | Capstan Motor/Drum Motor Drive Amplifier | B-171 |
| | CH-22 | Cue/TC/CTL Erase Head | B-325 |
| | CH-23 | Piggyback Board of SY-103 Board | B-32 |
| | CN-186 | Fan Motor Relaying | B-325 |
| | CR-18-C5 | ± 18V Regulator (on SP-03 Board) | B-278 |
| D | DE-18 | Tension Sensor | B-325 |
| | DET-3 | Search Dial Detector | B-217 |
| | DIF-2 | Processor Interface (Video) | B-233 |
| | DP-63 | Sub Key | B-217 |
| | DRC-1 | Video PB Equalizer and PB Clock PLL | B-47 |
| | DS-19 | TTP AUX | B-191 |
| E | EN-55 | Entry Key | B-217 |
| F | FE-05 | Rotary Erase Amplifier | B-197 |
| | Frame Wiring (Connector Panel) | | B-355 |
| | Frame Wiring (Function Control Panel) | | B-347 |
| | Frame Wiring (Level Control Panel) | | B-341 |
| | Frame Wiring (Power Supply) | | B-363 |
| | Frame Wiring (Tape Transport) | | B-327 |
| H | HD-06 | Full Erase Head | B-325 |
| I | IF-207 | Processor Interface (Audio & System) | B-241 |
| K | KC-14 | Key Control | B-215 |
| | KRV-060 | Switching Regulator (Drum VH) | B-287 |
| | KY-139 | Main Key | B-215 |
| L | LDR-1, 2, 3, 4 | Lower Drum (Video Head) | B-202 |
| | LO-06 | Cue/TC I/O & Audio Monitor Output Amplifier | B-249 |
| M | MB-199 | Mother Board | B-291 |
| | MC-29 | Threading Sensor | B-325 |
| P | PRD-1 | Video REC Equalizer | B-69 |
| | PS-143 | Front Cover/Tape Sensor | B-325 |
| R | RM-43 | Reel Motor Driver | B-181 |
| S | SE-49 | Remote-1, 2 Interface | B-351 |
| | SP-01 | Switching Regulator | B-257 |
| | SP-02 | Switching Regulator | B-267 |
| | SP-03 | Switching Regulator | B-277 |
| | SR-37, 38, 44 | Slip Ring and Brush | B-202 |
| | SV-90 | Servo/Logic Control | B-3 |
| | SW-269 | Audio Monitor Select Key and Level Meter | B-163 |
| | SW-270 | Sub Switch Board | B-339 |
| | SY-103 | CPU and TC Reader/Generator | B-31 |
| U | UDR-1, 2, 3 | Upper Drum (Video Head) | B-201 |
| | UR-09-C2 | + 13V Regulator (on SP-03 Board) | B-278 |
| | UR-20-C1 | + 5V Regulator (on SP-01 Board) | B-258 |
| | UR-20-C4 | + 90V Regulator (on SP-02 Board) | B-268 |
| | UR-20-C6 | Capstan/S-Reel/T-Reel VH Controller (on SP-02 Board) | B-268 |
| | UR-20-F | + 5V Sense LPF (on SP-01 Board) | B-258 |
| V | VH-20 | Piggyback Board of SV-90 Board | B-5 |
| | VR-74 | Audio Level Control | B-157 |

**SV-90** **BOARD (1-621-106-12)**
Component Side

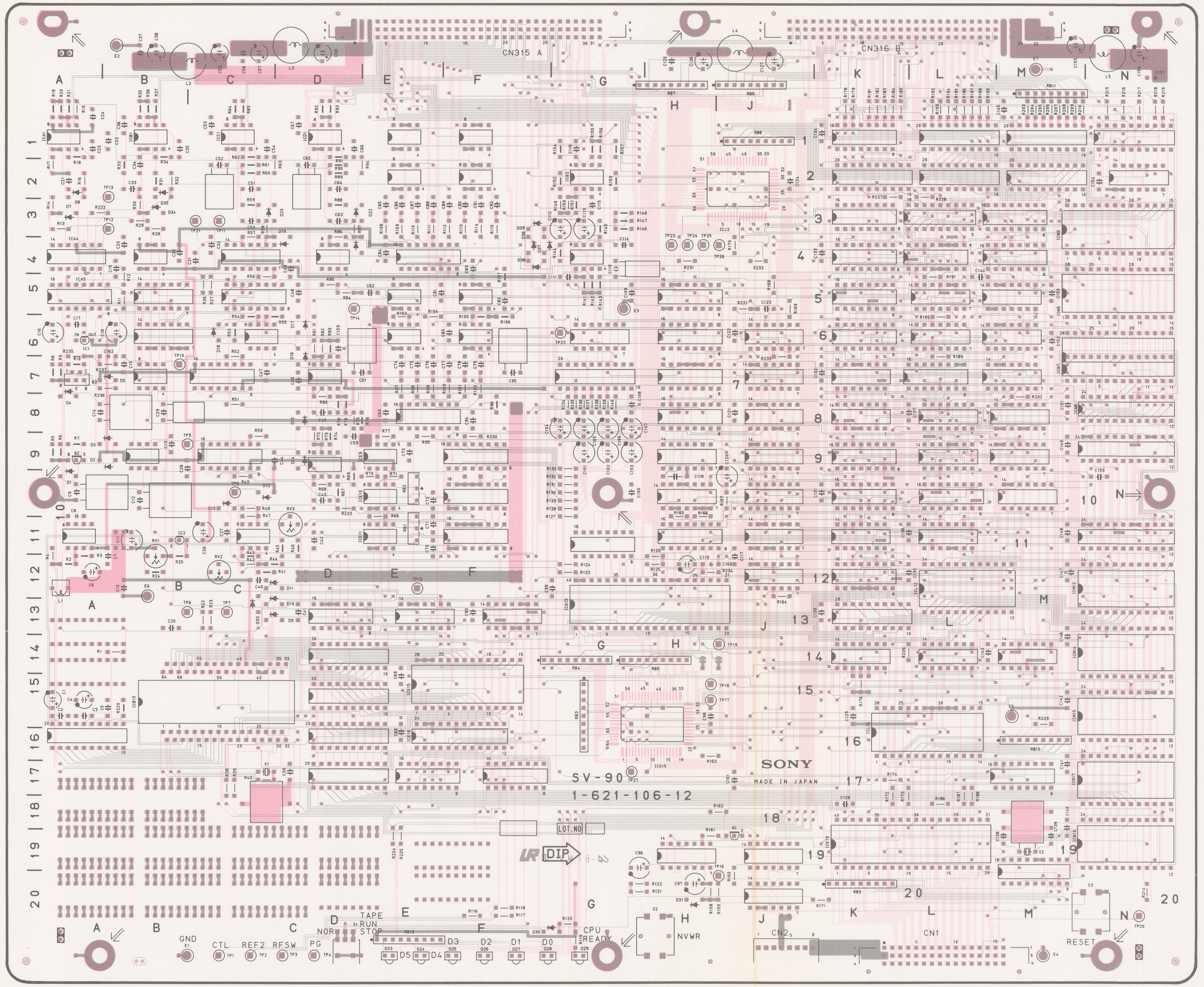
SV-90
1-621-106-12
SONY
MADE IN JAPAN
LOT.NO
DIP
CN315
CN316
CN1
CN2
GND
CTL
REF2
RFSW
PG
NOR
TAPE RUN STOP
CPU READY
NVWR
RESET
A
B
C
D
E
F
G
H
J
K
L
M
N
1
2
3
4
5
6
7
8
9
10
11
12
13
14
15
16
17
18
19
20

1-621-106-12 COMPONENT SIDE

1-621-106-12 SOLDER SIDE

**SV-90 (1-621-106-12)**

**HDD-1000**

| | |
|---|---|
| CN1 | L20 |
| CN2 | J20 |
| CN315 | F1 |
| CN316 | K1 |
| | |
| D1 | A10 |
| D2 | A9 |
| D3 | A9 |
| D4 | A8 |
| D5 | B7 |
| D7 | A3 |
| D8 | A3 |
| D9 | D13 |
| D10 | D13 |
| D11 | D12 |
| D12 | C10 |
| D13 | C10 |
| D14 | D9 |
| D15 | D8 |
| D16 | D7 |
| D17 | D6 |
| D18 | C6 |
| D19 | D3 |
| D20 | D3 |
| D21 | E4 |
| D22 | E3 |
| D23 | E20 |
| D24 | E20 |
| D25 | F20 |
| D26 | F20 |
| D27 | F20 |
| D28 | F20 |
| D29 | G20 |
| D30 | F20 |
| D31 | H20 |
| D33 | C13 |
| D34 | B3 |
| D35 | B3 |
| D36 | F4 |
| D37 | F4 |
| D38 | F4 |
| D39 | F3 |
| | |
| E1 | B20 |
| E2 | B1 |
| E3 | G5 |
| E4 | M20 |
| E5 | M15 |
| E6 | B12 |
| E7 | M1 |
| | |
| IC1 | A6 |
| IC2 | B11 |
| | |
| Q1 | J18 |
| Q2 | A9 |
| Q3 | A7 |
| | |
| RB1 | E11 |
| RB2 | E10 |
| RB3 | G15 |
| RB4 | G14 |
| RB5 | H14 |
| RB6 | J1 |
| RB7 | H1 |
| RB8 | J1 |
| RB9 | K20 |
| RB10 | M16 |
| RB11 | M1 |
| RB12 | E20 |
| | |
| RV1 | B11 |
| RV2 | C12 |
| RV3 | D10 |

| | |
|---|---|
| S1 | D20 |
| S2 | H20 |
| S3 | N20 |
| | |
| TP1 | C20 |
| TP2 | C20 |
| TP3 | D20 |
| TP4 | D20 |
| TP6 | B13 |
| TP7 | C13 |
| TP8 | C10 |
| TP9 | B9 |
| TP10 | B7 |
| TP11 | C3 |
| TP12 | B3 |
| TP13 | B2 |
| TP14 | D6 |
| TP15 | E12 |
| TP16 | J19 |
| TP17 | J15 |
| TP18 | J15 |
| TP19 | J14 |
| TP20 | N20 |
| TP21 | C3 |
| TP22 | G6 |
| TP23 | H3 |
| TP24 | H3 |
| TP25 | H3 |
| TP26 | J4 |
| TP27 | G17 |
| | |
| X2 | M19 |

**VH-20** **BOARD (1-628-210-11)**
Component Side

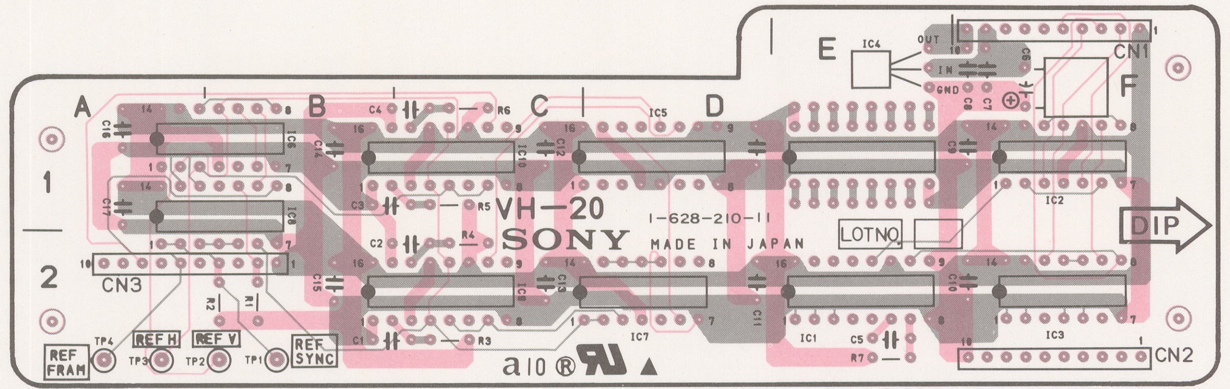
VH-20
1-628-210-11
SONY
MADE IN JAPAN
LOTNO
DIP
CN1
CN2
CN3
REF FRAM
REF H
REF V
REF SYNC
A
B
C
D
E
F
1
2

1-628-210-11 COMPONENT SIDE

1-628-210-11 SOLDER SIDE

## SV-90 BOARD AND VH-20 BOARD WAVEFORMS

PLAYER MODE : PLAY
OSCILLOSCOPE : TEKTRONIX 2465
VERTICAL : indicated on the photo itself
HORIZONTAL : indicated on the photo itself
FREQUENCY RESPONSE : 300 MHz or 20 MHz

①
1/3 CN315-11C

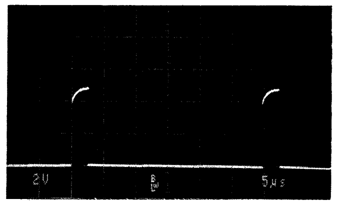

②

1/3 TP1/VH-20

1/3 TP2/VH-20

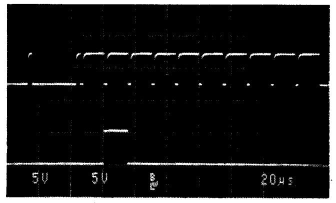

③

1/3 TP1/VH-20

1/3 TP3/VH-20

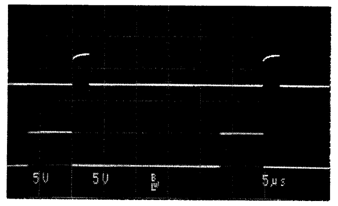

④

1/3 TP1/VH-20

1/3 TP4/VH-20

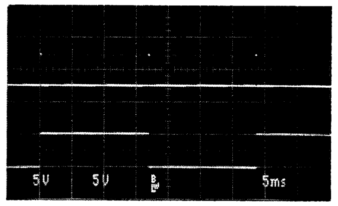

⑤

2/3 TP24/SV-90

2/3 TP23/SV-90

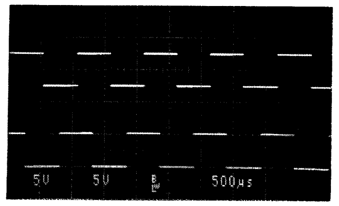

⑥

2/3 TP26/SV-90

2/3 TP27/SV-90

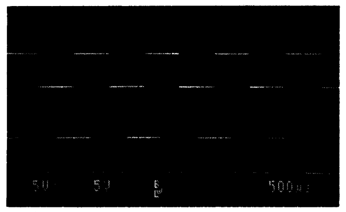

⑦

3/3 CN1-2/VH-20

3/3 IC3-8/VH-20

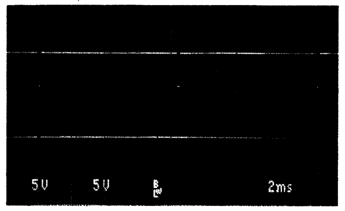

⑧

3/3 CN1-4/VH-20

3/3 CN1-5/VH-20

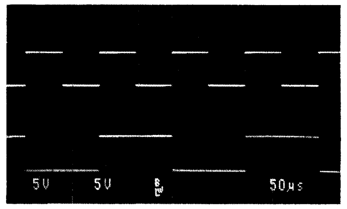

⑨

3/3 CN315-20a/SV-90

3/3 CN315-21a/SV-90

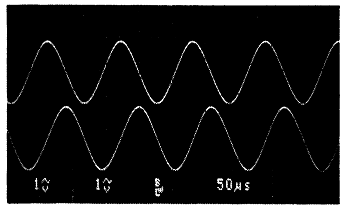

⑩

3/3 TP11/SV-90

3/3 TP21/SV-90

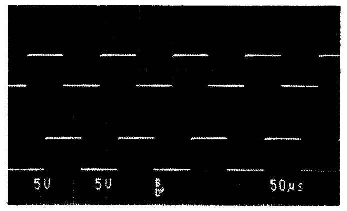

⑪

3/3 CN315-18a/SV-90

3/3 CN315-19a/SV-90

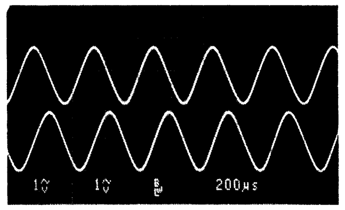

⑫

3/3 TP12/SV-90

3/3 TP13/SV-90

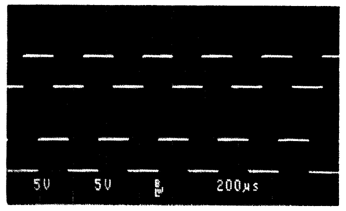

⑬ PG
3/3 TP4/SV-90

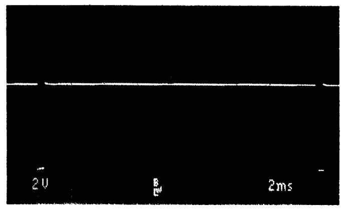

⑭ CTL
3/3 TP1/SV-90

3/3 CN316-10a/SV-90

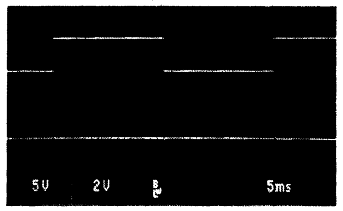

## SV-90 BOARD (1/3) Servo/Logic Control

CARD RACK SV-90(1/3) | SV-90(1/3) CARD RACK

CARD RACK SV-90(1/3) | SV-90(1/3) CARD RACK

ICK19 CXQ70108P MAIN CPU (16-BIT CPU)
ICL16 UPD71059C INTERRUPT CONTROL
ICL2 SN74HC573N LATCH
ICM2 SN74HC245AN
ICM1 SN74HC245AN
ICL1 SN74HC573N LATCH
ICG13 CF77049N
ICG11 M5451P
ICM19 CXQ71011P CLOCK GENERATOR
ICN1 SN74HC244AN
ICK1 SN74HC138AN
ICK6 SN74HC138AN
ICL4 SN74HC153AN
ICM4 SN74HC139AN
ICM3 SN74HC138AN ADDRESS DECODER
ICH11 MC14046BCP PLL
ICH9 SN74LS624N VCO
ICN5 27C256 32K×8 BIT EPROM
ICN3 27C256 32K×8 BIT EPROM
ICN7 CXK5864P 8K×8 BIT RAM
ICG15 CXD1095Q I/O EXPANDER
ICL3 X2212P 256×4 BIT NOV RAM
ICL6 CXQ71054P INTERVAL TIMER
ICK12 SN74HC161AN 4-BIT BINARY COUNTER
ICK13 SN74HC244AN
ICK5 SN74HC138AN
ICK3 SN74HC138AN
ICK4 SN74HC138AN
VH-20 BOARD (1/2)
IC9 TC74HC4538AP
IC5 SN74HC191N
IC6 SN74HC74AN
IC7 SN74HC74AN
IC10 TC74HC4538AP
TP1 TP2 TP3 TP4
TP16 TP17 TP18 TP19 TP20 TP27
REF SYNC
REF FRAME
FRAME ENA
REF EX 1
NOTE PIN NO. OF EDGE CONNECTORS.
IF, B1A
AU
SPARE-1
SPARE-2
PRD
DRC(#)
DRC(#)
SY
B-9
B-10
B-11
B-12
A
B
C
D
E
F
G
H
I
J
K
L
M
N
O
P
1
2
3
4
5

**SV-90(1/3)** BOARD
BOARD NO. 1-621-106-12
HDD-1000 ; #10001-

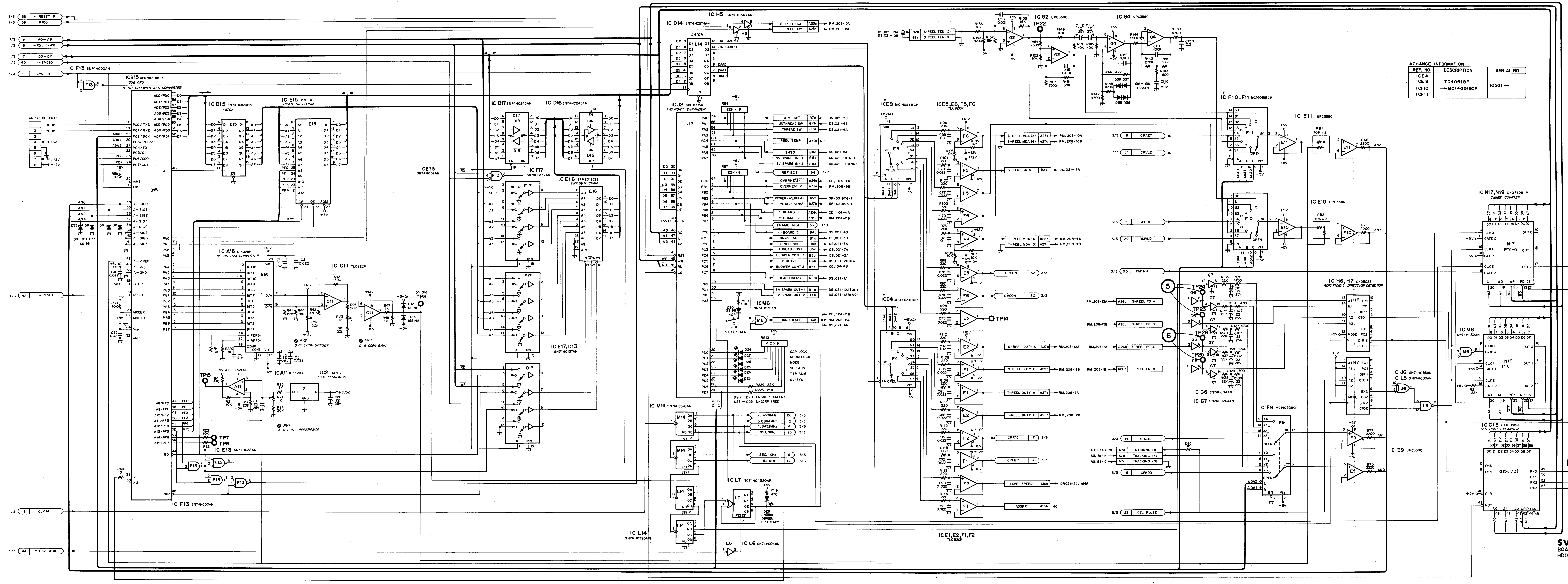
IC F13 SN74HC00AN
IC B15 UPD78C10AGQ
SUB CPU
8-BIT CPU WITH A/D CONVERTER
IC D15 SN74HC573BN
LATCH
IC E15 27C64
8K×8-BIT EPROM
IC D17 SN74HC245AN
IC D16 SN74HC245AN
IC E16 SRM2016C12
2K×8-BIT SRAM
IC F17 SN74HC157AN
IC E17, D13 SN74HC157AN
IC E13 SN74HC32AN
IC A16 UPC648C
12-BIT D/A CONVERTER
IC C11 TL082CP
IC A11 UPC358C
IC2 S4707
+3.3V REGULATOR
RV1 A/D CONV REFERENCE
RV2 D/A CONV OFFSET
RV3 D/A CONV GAIN
TP5
TP6
TP7
TP8
IC D14 SN74HC574AN
LATCH
IC H5 SN74HC367AN
IC J2 CXD1095Q
I/O PORT EXPANDER
IC M6 SN74HC32AN
IC M14 SN74HC393AN
IC L7 TC74HC4520AP
IC L14 SN74HC393AN
IC L6 SN74HC04AN
IC E8 MC14051BCP
IC E5,E6,F5,F6 TL082CP
IC E4 MC14051BCP
IC E1,E2,F1,F2 TL082CP
IC G2 UPC358C
IC G4 UPC358C
TP22
TP14
IC F10, F11 MC14051BCP
IC E11 UPC358C
IC E10 UPC358C
IC N17,N19 CXQ71054P
TIMER COUNTER
IC H6,H7 CX23026
ROTATIONAL DIRECTION DETECTOR
IC G6 SN74HC04AN
IC G7 SN74HC14AN
TP23
TP24
TP25
TP26
IC F9 MC14052BCP
IC E9 UPC358C
IC J6 SN74HC86AN
IC L5 SN74HC00AN
IC G15 CXD1095Q
I/O PORT EXPANDER
~RESET P
P100
CPU INT
~RESET
CLK14
~HSV WRK
S-REEL TCM
T-REEL TCM
TAPE DET
UNTHREAD SW
THREAD SW
REEL TEMP
SNSO
SV SPARE IN-1
SV SPARE IN-2
REF EX1
OVERHEAT-1
OVERHEAT-2
POWER OVERHEAT
POWER SENSE
~BOARD 1
~BOARD 2
FRAME NEA
~BOARD 3
BRAKE SOL
PINCH SOL
THREAD CONT
BLOWER CONT 1
IP DRIVE
BLOWER CONT 2
HEAD HOURS
SV SPARE OUT-1
SV SPARE OUT-2
HARD RESET
CAP LOCK
DRUM LOCK
MODE
SUB ABN
TTP ALM
SV-SYS
S-REEL TEN (+)
S-REEL TEN (-)
S-REEL MDA (+)
S-REEL MDA (-)
S-TEN GAIN
T-REEL MDA (+)
T-REEL MDA (-)
CPDON
DMCON
S-REEL FG A
S-REEL FG B
T-REEL FG A
T-REEL FG B
S-REEL DUTY A
S-REEL DUTY B
T-REEL DUTY A
T-REEL DUTY B
CPFAC
CPFBC
TAPE SPEED
ACSPR1
CPAOT
CPVLD
CPBOT
DMVLD
TMINH
CPBOO
TRACKING (+)
TRACKING (-)
TRACKING (G)
CPBOD
CTL PULSE
AN1
AN2
AN3
TC INT
~PTC0
~REF V
~PTC1
TAPE DIR
S-REEL SW
T-REEL SW
~P101
A
B
C
D
E
F
G
H
I
J
K
L
M
N
O
P
1
2
3
4
5

*CHANGE INFORMATION

| REF. NO | DESCRIPTION | SERIAL NO. |
|---|---|---|
| ICE4<br>ICE8<br>ICF10<br>ICF11 | TC4051BP<br>→MC14051BCP | 10501 — |

NOTE
PIN NO. OF EDGE CONNECTORS.

EX. A12abc
12abc → PIN NO.
A → CONNECTOR NO.
A; CNA (CN315)
B; CNB (CN316)

**SV-90 BOARD (2/3)**
BOARD NO. 1-621-106-12
HDD-1000 ; # 10001 -

## SV-90 BOARD (3/3) Servo/Logic Control

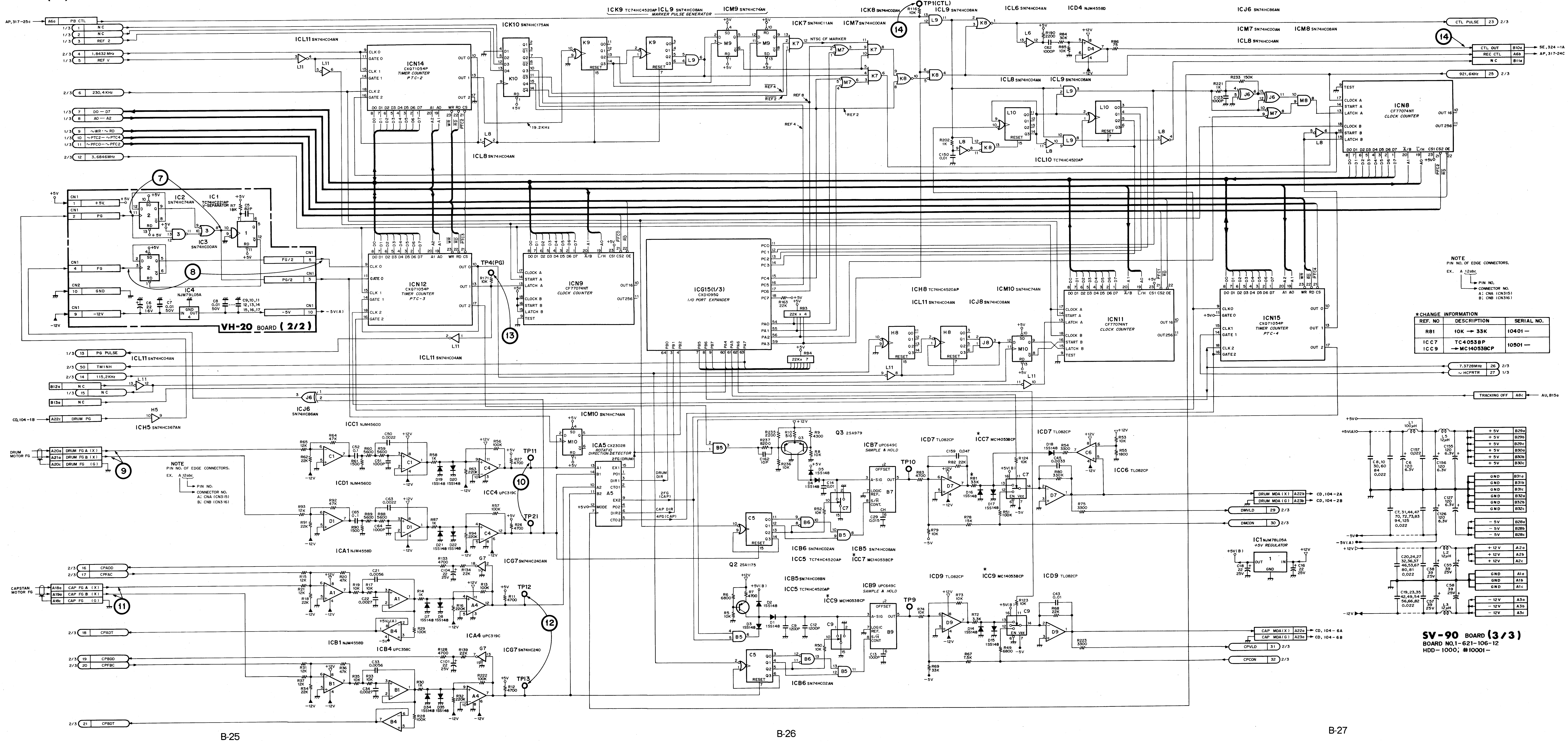
PB CTL
NC
REF 2
1.8432MHz
REF V
230.4KHz
D0 — D7
A0 — A2
~WR—~RD
~PTC2—~PTC4
~PFC0—~PFC2
3.6846MHz
ICL11 SN74HC04AN
ICN14 CXQ71054P TIMER COUNTER PTC-2
ICK10 SN74HC175AN
ICK9 TC74HC4520AP
ICL9 SN74HC08AN
MARKER PULSE GENERATOR
ICM9 SN74HC74AN
ICK7 SN74HC11AN
ICM7 SN74HC00AN
NTSC CF MARKER
ICK8 SN74HC02AN
TP1(CTL)
ICL6 SN74HC04AN
ICD4 NJM4558D
ICJ6 SN74HC86AN
ICM8 SN74HC08AN
CTL PULSE
CTL OUT
REC CTL
SE, 324-1A
AP, 317-24C
921.6KHz
ICN8 CF77074NT CLOCK COUNTER
ICL10 TC74HC4520AP
ICL8 SN74HC04AN
19.2KHz
REF 2
REF 4
IC2 SN74HC74AN
IC1 TC74HC221AP F/SEPARATOR
IC3 SN74HC00AN
IC4 NJM79L05A
PG
FG
GND
-12V
FG/2
PG/2
-5V
VH-20 BOARD (2/2)
ICN12 CXQ71054P TIMER COUNTER PTC-3
TP4(PG)
ICN9 CF77074NT CLOCK COUNTER
ICG15(1/3) CXD1095Q I/O PORT EXPANDER
ICH8 TC74HC4520AP
ICM10 SN74HC74AN
ICL11 SN74HC04AN
ICJ8 SN74HC08AN
ICN11 CF77074NT CLOCK COUNTER
ICN15 CXQ71054P TIMER COUNTER PTC-4
7.3728MHz
~HCPRTR
TRACKING OFF
AU, B15a
PG PULSE
TM1NH
115.2KHz
DRUM PG
ICH5 SN74HC367AN
ICJ6 SN74HC86AN
ICM10 SN74HC74AN
ICA5 CX23028 ROTATION DIRECTION DETECTOR
DRUM MOTOR FG
DRUM FG A (X)
DRUM FG B (X)
DRUM FG (G)
ICC1 NJM4560D
ICD1 NJM4560D
ICC4 UPC319C
ICA1 NJM4558D
TP10
TP11
TP21
TP12
TP13
ICG7 SN74HC240AN
CAPSTAN MOTOR FG
CAP FG A (X)
CAP FG B (X)
CAP FG (G)
CPADD
CPFAC
CPADT
CPBDD
CPFBC
CPBDT
ICB1 NJM4558D
ICB4 UPC358C
ICA4 UPC319C
Q3 2SA979
ICB7 UPC649C SAMPLE & HOLD
ICD7 TL082CP
ICC7 MC14053BCP
ICC6 TL082CP
ICB6 SN74HC02AN
ICC5 TC74HC4520AP
ICB5 SN74HC08AN
Q2 2SA1175
ICB5 SN74HC08AN
ICC9 MC14053BCP
ICB9 UPC649C SAMPLE & HOLD
ICD9 TL082CP
DRUM MDA (X)
DRUM MDA (G)
DMVLD
DMCON
CAP MDA (X)
CAP MDA (G)
CPVLD
CPCON
IC1 NJM78L05A +5V REGULATOR
+5V
GND
+12V
-12V
-5V

NOTE
PIN NO. OF EDGE CONNECTORS.
EX. A 12abc
12abc → PIN NO.
A → CONNECTOR NO.
A; CNA (CN315)
B; CNB (CN316)

*CHANGE INFORMATION

| REF. NO | DESCRIPTION | SERIAL NO. |
|---|---|---|
| R81 | 10K → 33K | 10401 — |
| ICC7<br>ICC9 | TC4053BP<br>→MC14053BCP | 10501 — |

**SV-90 BOARD (3/3)**
BOARD NO.1-621-106-12
HDD-1000; #10001-

## **SY-103** BOARD (1-621-105-12)

Component Side

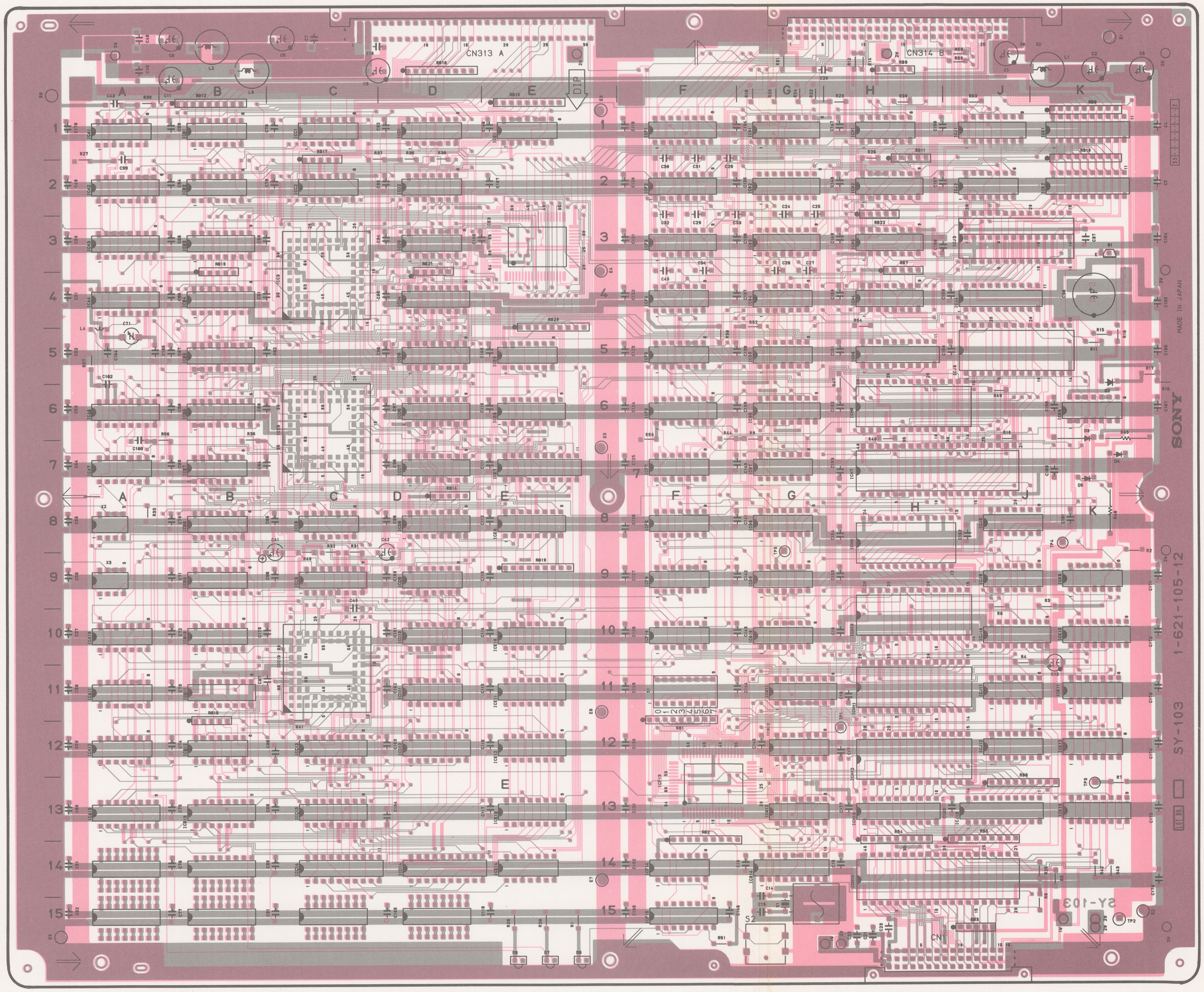
A
B
C
D
E
F
G
H
J
K
1
2
3
4
5
6
7
8
9
10
11
12
13
14
15
CN313 A
CN314 B
DIP
CN1
S2
SONY
MADE IN JAPAN
1-621-105-12
SY-103

1-621-105-12 COMPONENT SIDE

1-621-105-12 SOLDER SIDE

**SY-103 (1-621-105-12)**

**HDD-1000**

| | |
|---|---|
| CN313 | D1 |
| CN314 | H1 |
| D2 | K6 |
| D3 | K6 |
| D4 | K7 |
| D5 | K7 |
| D8 | E15 |
| D9 | D15 |
| E1 | K1 |
| E2 | K15 |
| E3 | E1 |
| E4 | E3 |
| E5 | E6 |
| E6 | E11 |
| E7 | E14 |
| E8 | A1 |
| E9 | A15 |
| Q1 | K3 |
| RB1 | F12 |
| RB2 | F13 |
| RB3 | J15 |
| RB4 | H13 |
| RB5 | J13 |
| RB6 | J12 |
| RB7 | H3 |
| RB8 | K1 |
| RB9 | H1 |
| RB10 | K1 |
| RB11 | H1 |
| RB12 | B1 |
| RB13 | B3 |
| RB14 | D7 |
| RB15 | E1 |
| RB16 | B11 |
| RB17 | C1 |
| RB18 | D1 |
| RB19 | E9 |
| RB20 | E4 |
| RB21 | D3 |
| RB22 | H3 |
| S2 | G15 |
| TP1 | H11 |
| TP2 | K15 |
| TP3 | K13 |
| TP4 | K8 |
| TP5 | G8 |
| X1 | G15 |
| X2 | A8 |
| X3 | A9 |

## **CH-23** BOARD (1-628-209-11)

Component Side

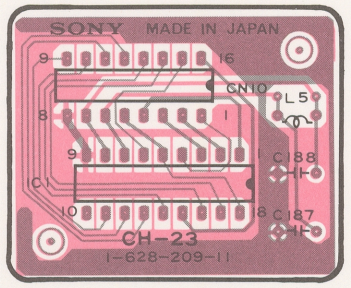
SONY
MADE IN JAPAN
CN10
L5
C188
C187
CH-23
1-628-209-11

1-628-209-11 COMPONENT SIDE

1-628-209-11 SOLDER SIDE

# SY-103 BOARD (1/2)

## System Control/Time Code

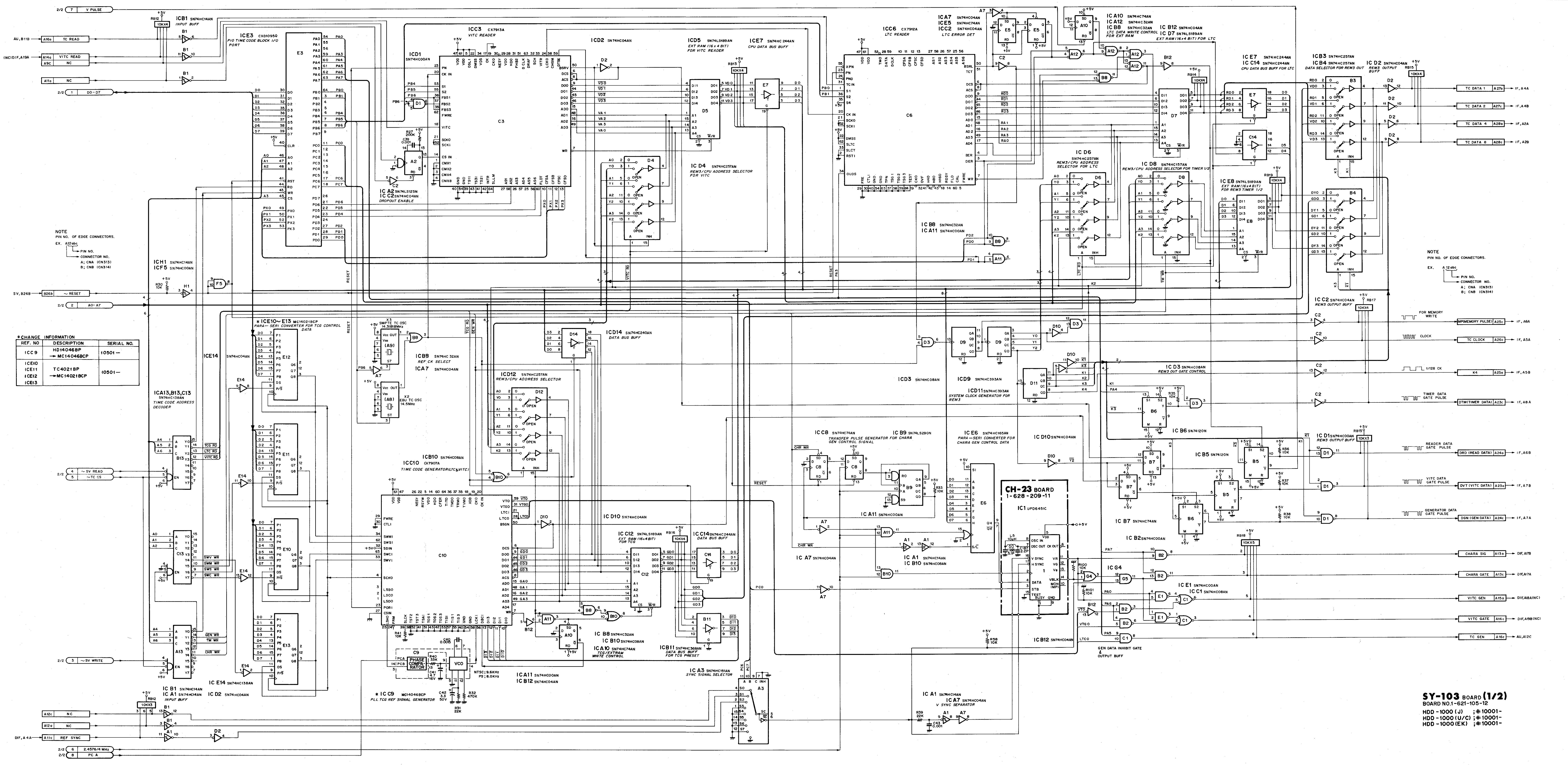

ICB1 SN74HC14AN INPUT BUFF
ICE3 CXD1095Q PIO TIME CODE BLOCK I/O PORT
ICC3 CX7913A VITC READER
ICD1 SN74HC00AN
ICD2 SN74HC04AN
ICD5 SN74LS189AN FOR VITC READER
ICE7 SN74HC244AN CPU DATA BUS BUFF
ICD4 SN74HC257AN REM3/CPU ADDRESS SELECTOR FOR VITC
ICC6 CX7912A LTC READER
ICA7 ICE5 ICC2 LTC ERROR DET
ICA10 ICA12 ICB8 LTC DATA WRITE CONTROL FOR EXT RAM
ICB12 ICD7 SN74LS189AN EXT RAM(16×4 BIT) FOR LTC
ICE7 ICC14 SN74HC244AN CPU DATA BUS BUFF FOR LTC
ICB3 ICB4 SN74HC257AN DATA SELECTOR FOR REM3 OUT
ICD2 SN74HC07AN REM3 OUTPUT BUFF
ICD6 SN74HC257AN REM3/CPU ADDRESS SELECTOR FOR LTC
ICD8 SN74HC157AN REM3/CPU ADDRESS SELECTOR FOR TIMER 1/2
ICE8 SN74LS189AN EXT RAM(16×4 BIT) FOR REM3 TIMER 1/2
ICA2 SN74LS123N ICC2 SN74HC04AN DROPOUT ENABLE
ICB8 ICA11
ICH1 ICF5
ICE10~E13 MC14021BCP PARA←SERI CONVERTER FOR TCG CONTROL DATA
ICE14 SN74HC04AN
ICB9 SN74HC32AN REF CK SELECT
ICA7 SN74HC04AN
X3 SMPTE TC OSC 14.3181818MHz
X2 EBU TC OSC 14.5MHz
ICA13,B13,C13 SN74HC138AN TIME CODE ADDRESS DECODER
ICD14 SN74HC240AN DATA BUS BUFF
ICD12 SN74HC257AN REM3/CPU ADDRESS SELECTOR
ICB10 SN74HC08AN
ICC10 CX7907A TIME CODE GENERATOR(LTC/VITC)
ICD10 SN74HC04AN
ICC12 SN74LS189AN EXT RAM(16×4 BIT) FOR TCG
ICC14 SN74HC244AN DATA BUS BUFF
ICB8 SN74HC32AN ICB10 SN74HC08AN
ICA10 SN74HC74AN TCG/EXTRAM WRITE CONTROL
ICB11 SN74HC368AN DATA BUS BUFF FOR TCG PRESET
ICA3 SN74HC151AN SYNC SIGNAL SELECTOR
ICA11 SN74HC00AN ICB12 SN74HC04AN
*ICC9 MC14046BCP PLL TCG REF SIGNAL GENERATOR
PHASE COMPARATOR VCO
NTSC;9.6KHz PS;8.0KHz
IC B1 SN74HC14AN IC A1 SN74HC04AN INPUT BUFF
IC E14 SN74HC138AN IC D2 SN74HC04AN
ICD3 SN74HC08AN
ICD9 SN74HC393AN
ICD11 SN74HC393AN SYSTEM CLOCK GENERATOR FOR REM3
ICC8 SN74HC74AN TRANSFER PULSE GENERATOR FOR CHARA GEN CONTROL SIGNAL
ICB9 SN74LS29GN
ICE6 SN74HC165AN PARA←SERI CONVERTER FOR CHARA GEN CONTROL DATA
ICD10 SN74HC04AN
ICD3 SN74HC08AN REM3 OUT GATE CONTROL
ICB6 SN74120N
ICB5 SN74120N
ICB7 SN74HC74AN
ICC2 SN74HC04AN REM3 OUTPUT BUFF
ICD1 SN74HC00AN REM3 OUTPUT BUFF
ICA11 SN74HC00AN
IC A7 SN74HC04AN
ICA1 SN74HC14AN ICB10 SN74HC08AN
CH-23 BOARD 1-628-209-11
IC1 UPD6451C
ICB2 SN74HC00AN
ICG4
ICE1 SN74HC00AN ICC1 SN74HC08AN
ICB12 SN74HC04AN
GEN DATA INHIBIT GATE & OUTPUT BUFF
IC A1 SN74HC14AN IC A7 SN74HC04AN V SYNC SEPARATOR
V PULSE
TC READ
VITC READ
NC
D0~D7
~RESET
A0~A7
~SV READ
~TC CS
~SV WRITE
REF SYNC
2.4576/4 MHz
PC A
TC DATA 1
TC DATA 2
TC DATA 4
TC DATA 8
FOR MEMORY WRITE
MP(MEMORY PULSE)
CLOCK
TC CLOCK
1/128 CK
K4
TIMER DATA GATE PULSE
DTM(TIMER DATA)
READER DATA GATE PULSE
DRD (READ DATA)
VITC DATA GATE PULSE
DVT (VITC DATA)
GENERATOR DATA GATE PULSE
DGN (GEN DATA)
CHARA SIG
CHARA GATE
VITC GEN
VITC GATE
TC GEN
IF, A4A
IF, A4B
IF, A2A
IF, A2B
IF, A6A
IF, A5A
IF, A5B
IF, A8A
IF, A6B
IF, A7B
IF, A7A
DIF, A7B
DIF, A7A
DIF, A12A(NC)
DIF, A15B(NC)
AU, A12C
A B C D E F G H I J K L
1 2 3 4 5

NOTE
PIN NO. OF EDGE CONNECTORS.
EX. A12abc
PIN NO.
CONNECTOR NO.
A; CNA (CN313)
B; CNB (CN314)

*CHANGE INFORMATION

| REF. NO | DESCRIPTION | SERIAL NO. |
|---|---|---|
| ICC9 | HD14046BP<br>→MC14046BCP | 10501— |
| ICE10<br>ICE11<br>ICE12<br>ICE13 | TC4021BP<br>→MC14021BCP | 10501— |

NOTE
PIN NO. OF EDGE CONNECTORS.
EX. A12abc
PIN NO.
CONNECTOR NO.
A; CNA (CN313)
B; CNB (CN314)

**SY-103 BOARD (1/2)**
BOARD NO.1-621-105-12
HDD-1000 (J) ;#10001-
HDD-1000 (U/C) ;#10001-
HDD-1000 (EK) ;#10001-

## **DRC-1** BOARD (1-628-203-11, 12)

Component Side

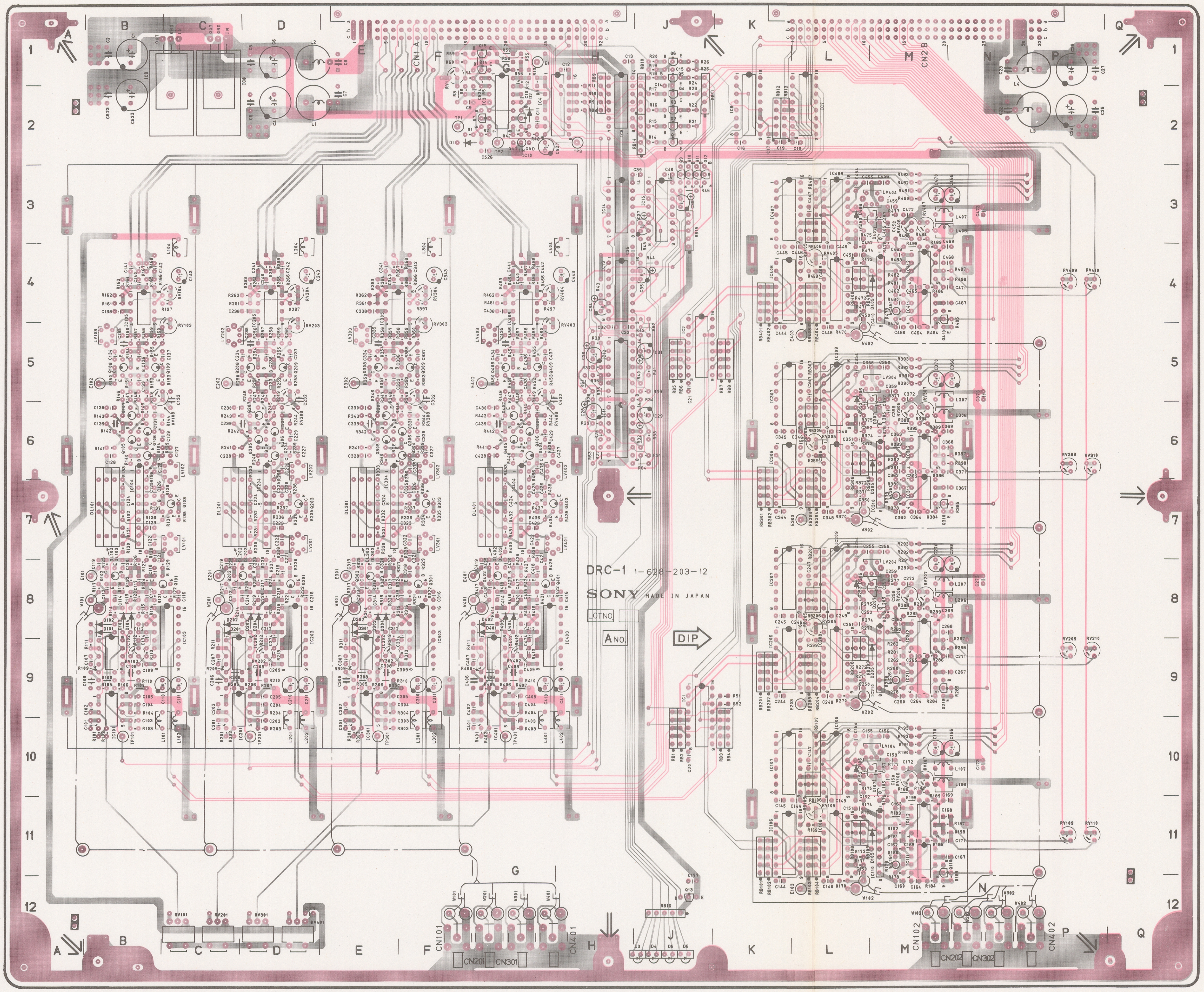

1-628-203-12 COMPONENT SIDE

1-628-203-12 SOLDER SIDE

**DRC-1 (1-628-203-12)**

**HDD-1000**

| | |
|---|---|
| CN1 | F1 |
| CN2 | M1 |
| CN101 | F12 |
| CN102 | M12 |
| CN201 | F12 |
| CN202 | M12 |
| CN301 | G12 |
| CN302 | N12 |
| CN401 | H12 |
| CN402 | P12 |
| D1 | F2 |
| D2 | G2 |
| D3 | J12 |
| D4 | J12 |
| D5 | J12 |
| D6 | J12 |
| D101 | B8 |
| D102 | B8 |
| D103 | B8 |
| D104 | B8 |
| D105 | M11 |
| D106 | L10 |
| D107 | M10 |
| D201 | C8 |
| D202 | C8 |
| D203 | D8 |
| D204 | D8 |
| D205 | M9 |
| D206 | L8 |
| D207 | M8 |
| D301 | E8 |
| D302 | E8 |
| D303 | E8 |
| D304 | E8 |
| D305 | M7 |
| D306 | L5 |
| D307 | M6 |
| D401 | G8 |
| D402 | G8 |
| D403 | G8 |
| D404 | G8 |
| D405 | M4 |
| D406 | L3 |
| D407 | M3 |
| DL101 | B7 |
| DL102 | B7 |
| DL103 | B7 |
| DL201 | C7 |
| DL202 | C7 |
| DL203 | D7 |
| DL301 | E7 |
| DL302 | E7 |
| DL303 | E7 |
| DL401 | G7 |
| DL402 | G7 |
| DL403 | G7 |
| E1 | G1 |
| E101 | A8 |
| E102 | B5 |
| E103 | L12 |
| E201 | C8 |
| E202 | C5 |
| E203 | L9 |
| E301 | E8 |
| E302 | E5 |
| E303 | L7 |
| E401 | F8 |
| E402 | F5 |
| E403 | L5 |
| IC1 | J9 |
| IC2 | J5 |
| IC3 | G2 |
| IC4 | G2 |
| IC5 | H2 |
| IC6 | K2 |
| IC7 | L2 |
| IC8 | D1 |
| IC9 | B1 |
| IC10 | G2 |
| IC11 | H6 |
| IC12 | H5 |
| IC13 | H4 |
| IC14 | H3 |
| IC15 | J3 |
| IC101 | B10 |
| IC102 | B9 |
| IC103 | C9 |
| IC104 | B7 |
| IC105 | B4 |
| IC106 | K11 |
| IC107 | K10 |
| IC108 | L11 |
| IC109 | L10 |
| IC110 | M11 |
| IC111 | M11 |
| IC112 | M11 |
| IC201 | C10 |
| IC202 | D9 |
| IC203 | D9 |
| IC204 | D7 |
| IC205 | D4 |
| IC206 | K9 |
| IC207 | K8 |
| IC208 | L9 |
| IC209 | L7 |
| IC210 | M9 |
| IC211 | M9 |
| IC212 | M9 |
| IC301 | E10 |
| IC302 | E9 |
| IC303 | F9 |
| IC304 | E7 |
| IC305 | E4 |
| IC306 | K6 |
| IC307 | K5 |
| IC308 | L6 |
| IC309 | L5 |
| IC310 | M7 |
| IC311 | M7 |
| IC312 | M6 |
| IC401 | G10 |
| IC402 | G9 |
| IC403 | H9 |
| IC404 | G7 |
| IC405 | G4 |
| IC406 | K4 |
| IC407 | K3 |
| IC408 | L4 |
| IC409 | L3 |
| IC410 | M4 |
| IC411 | M4 |
| IC412 | M4 |
| LV101 | C7 |
| LV102 | C6 |
| LV103 | B5 |
| LV104 | M10 |
| LV201 | D7 |
| LV202 | D6 |
| LV203 | C5 |
| LV204 | M8 |
| LV301 | F7 |
| LV302 | F6 |
| LV303 | E5 |
| LV304 | M5 |
| LV401 | H7 |
| LV402 | H6 |
| LV403 | G5 |
| LV404 | M3 |
| Q1 | J2 |
| Q2 | J2 |
| Q3 | J2 |
| Q4 | J2 |
| Q5 | J1 |
| Q6 | J1 |
| Q7 | F2 |
| Q8 | G2 |
| Q9 | J2 |
| Q10 | J2 |
| Q11 | J2 |
| Q12 | J2 |
| Q13 | J12 |
| Q14 | G1 |
| Q15 | G1 |
| Q101 | C8 |
| Q102 | B8 |
| Q103 | C7 |
| Q104 | B6 |
| Q105 | B6 |
| Q106 | B6 |
| Q107 | B6 |
| Q108 | B5 |
| Q109 | C5 |
| Q110 | M11 |
| Q201 | D8 |
| Q202 | C8 |
| Q203 | D7 |
| Q204 | D6 |
| Q205 | D6 |
| Q206 | D6 |
| Q207 | D6 |
| Q208 | C5 |
| Q209 | D5 |
| Q210 | M9 |
| Q301 | F8 |
| Q302 | E8 |
| Q303 | F7 |
| Q304 | F6 |
| Q305 | E6 |
| Q306 | F6 |
| Q307 | E6 |
| Q308 | E5 |
| Q309 | F5 |
| Q310 | M7 |
| Q401 | H8 |
| Q402 | G8 |
| Q403 | H7 |
| Q404 | G6 |
| Q405 | G6 |
| Q406 | G6 |
| Q407 | G6 |
| Q408 | G5 |
| Q409 | G5 |
| Q410 | M5 |
| RB1 | J10 |
| RB2 | J10 |
| RB3 | K10 |
| RB4 | K10 |
| RB5 | J5 |
| RB6 | J5 |
| RB7 | K5 |
| RB8 | K5 |
| RB9 | H1 |
| RB10 | J1 |
| RB11 | J2 |
| RB12 | K2 |
| RB13 | K2 |
| RB14 | J2 |
| RB15 | J3 |
| RB16 | J12 |
| RB101 | K12 |
| RB102 | K12 |
| RB103 | L12 |
| RB104 | L12 |
| RB105 | L11 |
| RB106 | L11 |
| RB107 | L10 |
| RB108 | L11 |
| RB109 | L11 |
| RB201 | K9 |
| RB202 | K9 |
| RB203 | L9 |
| RB204 | L9 |
| RB205 | L8 |
| RB206 | L8 |
| RB207 | L7 |
| RB208 | L9 |
| RB209 | L9 |
| RB301 | K7 |
| RB302 | K7 |
| RB303 | L7 |
| RB304 | L7 |
| RB305 | L6 |
| RB306 | L6 |
| RB307 | L5 |
| RB308 | L7 |
| RB309 | L6 |
| RB401 | K5 |
| RB402 | K5 |
| RB403 | L5 |
| RB404 | L5 |
| RB405 | L4 |
| RB406 | L4 |
| RB407 | L3 |
| RB408 | L4 |
| RB409 | L4 |
| RV101 | C12 |
| RV102 | B9 |
| RV103 | C5 |
| RV104 | C4 |
| RV105 | L11 |
| RV106 | M10 |
| RV107 | M10 |
| RV108 | C6 |
| RV109 | P11 |
| RV110 | P11 |
| RV201 | C12 |
| RV202 | D9 |
| RV203 | D5 |
| RV204 | D4 |
| RV205 | L8 |
| RV206 | M8 |
| RV207 | M8 |
| RV208 | D6 |
| RV209 | P9 |
| RV210 | P9 |
| RV301 | D12 |
| RV302 | E9 |
| RV303 | F5 |
| RV304 | F4 |
| RV305 | L6 |
| RV306 | M6 |
| RV307 | M5 |
| RV308 | F6 |
| RV309 | P6 |
| RV310 | P6 |
| RV401 | D12 |
| RV402 | G9 |
| RV403 | H5 |
| RV404 | H4 |
| RV405 | L4 |
| RV406 | M3 |
| RV407 | M3 |
| RV408 | H6 |
| RV409 | P4 |
| RV410 | P4 |
| TP1 | F2 |
| TP3 | G2 |
| TP3 | H2 |
| TP101 | B10 |
| TP201 | D10 |
| TP301 | E10 |
| TP401 | G10 |

## SY-103 BOARD (2/2)

System Control/Time Code

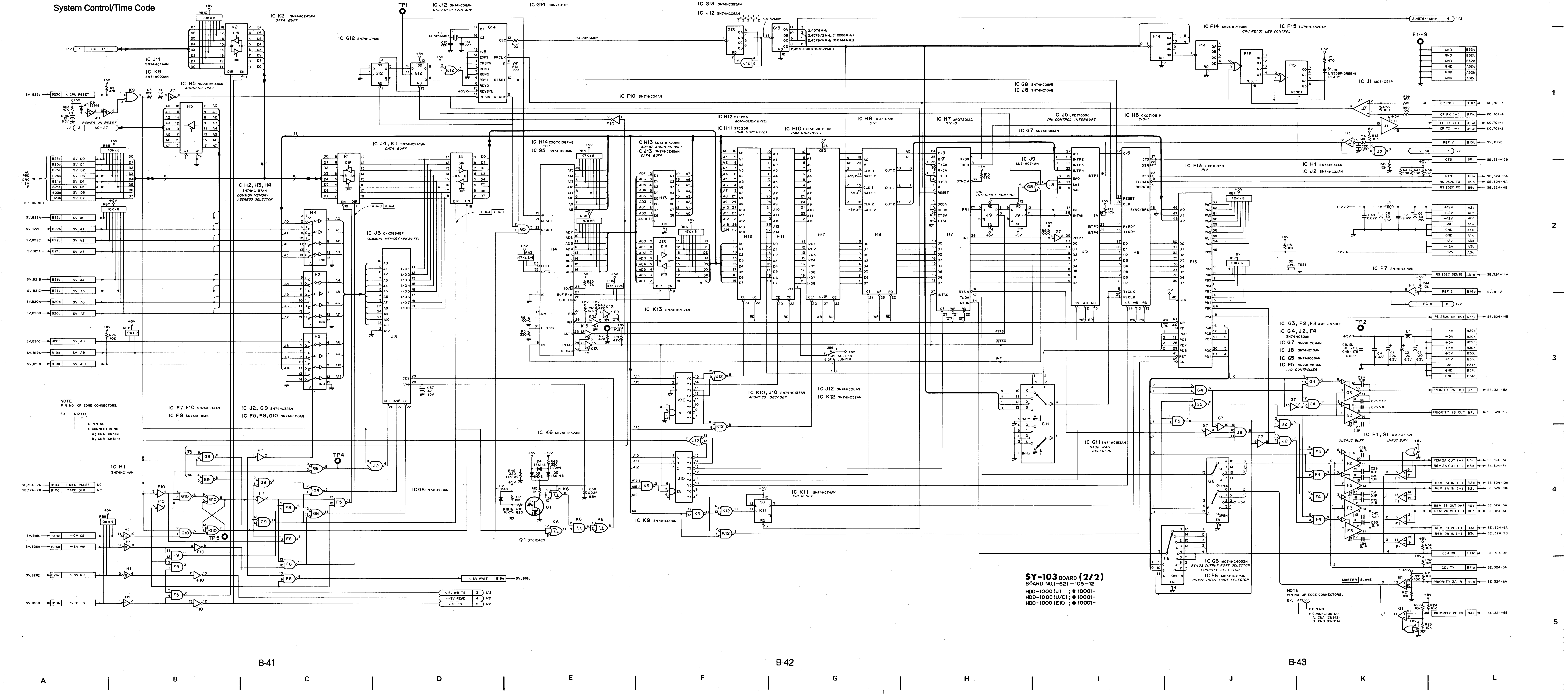
IC K2 SN74HC245AN DATA BUFF
IC J11 SN74HC14AN
IC K9 SN74HC00AN
IC H5 SN74HC244AN ADDRESS BUFF
POWER ON RESET
D0–D7
A0–A7
IC J4, K1 SN74HC245AN DATA BUFF
IC H2, H3, H4 SN74HC157AN COMMON MEMORY ADDRESS SELECTOR
IC J3 CXK5864BP COMMON MEMORY (8K BYTE)
IC G12 SN74HC74AN
IC J12 SN74HC08AN OSC/RESET/READY
IC G14 CXQ71011P
14.7456MHz
TP1
IC F10 SN74HC04AN
IC H14 CXQ70108P-8 CPU
IC G5 SN74HC08AN
IC H13 SN74HC573BN AD-A7 ADDRESS BUFF
IC J13 SN74HC245AN DATA BUFF
IC K13 SN74HC367AN
TP3
IC G13 SN74HC393AN
IC J12 SN74HC08AN
4.9152MHz
2.4576MHz
2.4576/2MHz (1.2288MHz)
2.4576/4MHz (0.6144MHz)
2.4576/8MHz (0.3072MHz)
IC H12 27C256 ROM-0 (32K BYTE)
IC H11 27C256 ROM-1 (32K BYTE)
IC H10 CXK5864BP-10L RAM-0 (8K BYTE)
IC H8 CXQ71054P CTC
IC H7 UPD7201AC SIO-0
IC J9 SN74HC74AN
SIO INTERRUPT CONTROL
IC J5 UPD71059C CPU CONTROL INTERRUPT
IC G8 SN74HC08AN
IC J8 SN74HC10AN
IC G7 SN74HC04AN
IC H6 CXQ71051P SIO-1
IC F14 SN74HC393AN
IC F15 TC74HC4520AP CPU READY LED CONTROL
D8 LN358PIGREEN) READY
E1~9
IC J1 MC34051P
IC H1 SN74HC14AN
IC J2 SN74HC32AN
IC F13 CXD1095Q PIO
IC F7 SN74HC04AN
TEST
TP2
IC G3, F2, F3 AM26LS30PC
IC G4, J2, F4 SN74HC32AN
IC G7 SN74HC04AN
IC J8 SN74HC10AN
IC G5 SN74HC08AN
IC F5 SN74HC00AN I/O CONTROLLER
OUTPUT BUFF
INPUT BUFF
IC F1, G1 AM26LS32PC
IC G6 MC74HC4052N RS422 OUTPUT PORT SELECTOR PRIORITY SELECTOR
IC F6 MC74HC4051N RS422 INPUT PORT SELECTOR
MASTER SLAVE
IC G11 SN74HC153AN BAUD RATE SELECTOR
SOLDER JUMPER
IC K10, J10 SN74HC138AN ADDRESS DECODER
IC J12 SN74HC08AN
IC K12 SN74HC32AN
IC K11 SN74HC74AN PIO RESET
IC K9 SN74HC00AN
IC K6 SN74HC132AN
Q1 DTC124ES
IC G8 SN74HC08AN
TP4
TP5
IC H1 SN74HC14AN
IC F7, F10 SN74HC04AN
IC F9 SN74HC08AN
IC J2, G9 SN74HC32AN
IC F5, F8, G10 SN74HC00AN
TIMER PULSE
TAPE DIR
~5V WAIT
~5V WRITE
~5V READ
~TC CS
PRIORITY 2A OUT
PRIORITY 2B OUT
REM 2A OUT (+)
REM 2A OUT (−)
REM 2A IN (+)
REM 2A IN (−)
REM 2B OUT (+)
REM 2B OUT (−)
REM 2B IN (+)
REM 2B IN (−)
CCJ RX
CCJ TX
PRIORITY 2A IN
PRIORITY 2B IN
CP RX (+)
CP RX (−)
CP TX (+)
CP TX (−)
V PULSE
CTS
RTS
RS 232C TX
RS 232C RX
RS 232C SENSE
REF 2
PC A
RS 232C SELECT
KC, 701-3
KC, 701-4
KC, 701-1
KC, 701-2
SE, 324-15A
SE, 324-4A
SE, 324-4B
SE, 324-14A
SV, B14A
SE, 324-14B
SE, 324-5A
SE, 324-5B
SE, 324-7A
SE, 324-7B
SE, 324-10A
SE, 324-10B
SE, 324-6A
SE, 324-6B
SE, 324-9A
SE, 324-9B
SE, 324-3B
SE, 324-3A
SE, 324-8A
SE, 324-8B

NOTE
PIN NO. OF EDGE CONNECTORS.
EX. A12abc
PIN NO.
CONNECTOR NO.
A; CNA (CN313)
B; CNB (CN314)

**SY-103 BOARD (2/2)**
BOARD NO.1-621-105-12
HDD-1000 (J) ; # 10001-
HDD-1000 (U/C) ; # 10001-
HDD-1000 (EK) ; # 10001-

NOTE
PIN NO. OF EDGE CONNECTORS.
EX. A12abc
PIN NO.
CONNECTOR NO.
A; CNA (CN313)
B; CNB (CN314)

# DRC-1 BOARD WAVEFORMS

OSCILLOSCOPE : TEKTRONIX 2465
VERTICAL : indicated on the photo itself
HORIZONTAL : indicated on the photo itself
FREQUENCY RESPONSE : 300 MHz or 20 MHz

①
PLAY
1/3 CN101

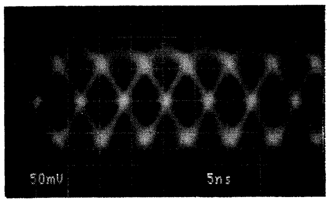

②
PLAY
1/3 RV104

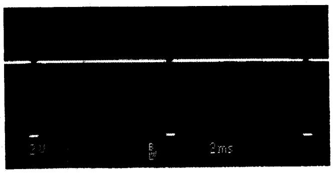

③
PLAY
1/3 TP101

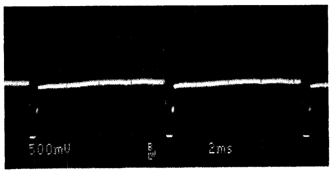

④
PLAY
2/3 CN202

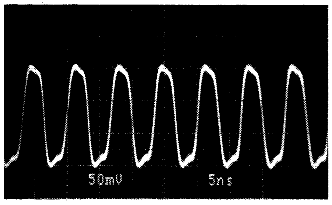

⑤
EE

2/3 IC1-15

2/3 IC108-2

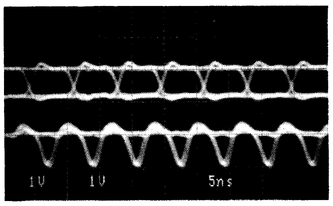

⑥
SHUTTLE (−1 time)
2/3 IC111-5

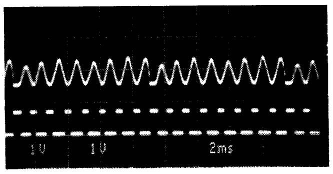

⑦
SHUTTLE (−8 times)
2/3 IC111-5

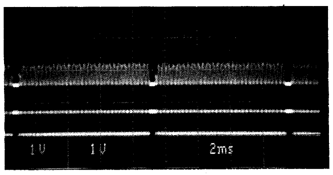

## DRC-1 BOARD (1/3)

Video PB Equalizer and PB Clock PLL

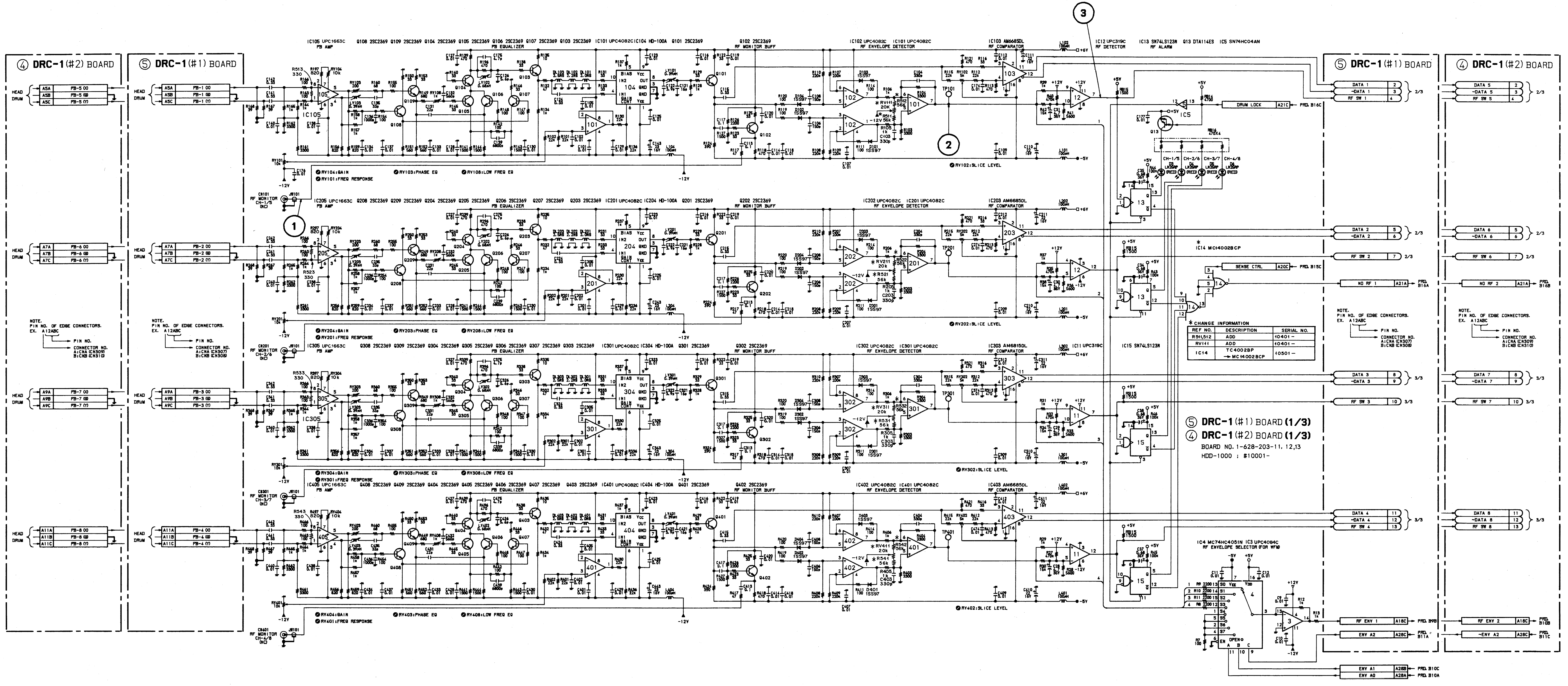
④ DRC-1 (#2) BOARD
⑤ DRC-1 (#1) BOARD
HEAD DRUM
A5A PB-5 (O)
A5B PB-5 (G)
A5C PB-5 (Y)
A5A PB-1 (O)
A5B PB-1 (G)
A5C PB-1 (Y)
A7A PB-6 (O)
A7B PB-6 (G)
A7C PB-6 (Y)
A7A PB-2 (O)
A7B PB-2 (G)
A7C PB-2 (Y)
A9A PB-7 (O)
A9B PB-7 (G)
A9C PB-7 (Y)
A9A PB-3 (O)
A9B PB-3 (G)
A9C PB-3 (Y)
A11A PB-8 (O)
A11B PB-8 (G)
A11C PB-8 (Y)
A11A PB-4 (O)
A11B PB-4 (G)
A11C PB-4 (Y)
NOTE. PIN NO. OF EDGE CONNECTORS. EX. A12ABC → PIN NO. → CONNECTOR NO. A:CNA (CN309) B:CNB (CN310)
NOTE. PIN NO. OF EDGE CONNECTORS. EX. A12ABC → PIN NO. → CONNECTOR NO. A:CNA (CN307) B:CNB (CN308)
IC105 UPC1663C PB AMP
Q108 2SC2369 Q109 2SC2369 Q104 2SC2369 Q105 2SC2369 Q106 2SC2369 Q107 2SC2369 Q103 2SC2369 PB EQUALIZER
IC101 UPC4082C IC104 HD-100A Q101 2SC2369
Q102 2SC2369 RF MONITOR BUFF
IC102 UPC4082C IC101 UPC4082C RF ENVELOPE DETECTOR
IC103 AM6685DL RF COMPARATOR
IC12 UPC319C RF DETECTOR
IC13 SN74LS123N Q13 DTA114ES IC5 SN74HC04AN RF ALARM
BIAS Vcc IN2 OUT IN1 GND CONT Vcc
RV104:GAIN
RV101:FREQ RESPONSE
RV103:PHASE EQ
RV108:LOW FREQ EQ
RV102:SLICE LEVEL
RF MONITOR CH-1/5 (NC)
RF MONITOR CH-2/6 (NC)
RF MONITOR CH-3/7 (NC)
RF MONITOR CH-4/8 (NC)
IC205 UPC1663C PB AMP
RV204:GAIN
RV201:FREQ RESPONSE
RV203:PHASE EQ
RV208:LOW FREQ EQ
RV202:SLICE LEVEL
IC305 UPC1663C PB AMP
RV304:GAIN
RV301:FREQ RESPONSE
RV303:PHASE EQ
RV308:LOW FREQ EQ
RV302:SLICE LEVEL
IC405 UPC1663C PB AMP
RV404:GAIN
RV401:FREQ RESPONSE
RV403:PHASE EQ
RV408:LOW FREQ EQ
RV402:SLICE LEVEL
IC14 MC14002BCP
IC11 UPC319C
IC15 SN74LS123N
CH-1/5 CH-2/6 CH-3/7 CH-4/8 LN28RP (RED)
DRUM LOCK A21C PRD. B16C
SENSE CTRL A20C PRD. B15C
NO RF 1 A21A PRD. B16A
NO RF 2 A21A PRD. B16B
DATA 1 2
~DATA 1 3
RF SW 1 4
2/3
DATA 2 5
~DATA 2 6
2/3
RF SW 2 7 2/3
DATA 3 8
~DATA 3 9
3/3
RF SW 3 10 3/3
DATA 4 11
~DATA 4 12
RF SW 4 13
3/3
DATA 5 2
~DATA 5 3
RF SW 5 4
2/3
DATA 6 5
~DATA 6 6
2/3
RF SW 6 7 2/3
DATA 7 8
~DATA 7 9
3/3
RF SW 7 10 3/3
DATA 8 11
~DATA 8 12
RF SW 8 13
3/3
IC4 MC74HC4051N IC3 UPC4084C RF ENVELOPE SELECTOR (FOR WFM)
RF ENV 1 A18C PRD. B9B
ENV A2 A28C PRD. B11A
RF ENV 2 A18C PRD. B10B
~ENV A2 A28C PRD. B11C
ENV A1 A28B PRD. B10C
ENV A0 A28A PRD. B10A
①
②
③
+5V
-5V
+12V
-12V
A
B
C
D
E
F
G
H
I
J
K
L
1
2
3
4
5

* CHANGE INFORMATION

| REF NO. | DESCRIPTION | SERIAL NO. |
|---|---|---|
| R511,512 | ADD | 10401 – |
| RV111 | ADD | 10401 – |
| IC14 | TC4002BP<br>→ MC14002BCP | 10501 – |

⑤ **DRC-1** (#1) BOARD **(1/3)**
④ **DRC-1** (#2) BOARD **(1/3)**
BOARD NO. 1-628-203-11, 12,13
HDD-1000 ; #10001-

## DRC-1 BOARD (2/3)

Video PB Equalizer and PB Clock PLL

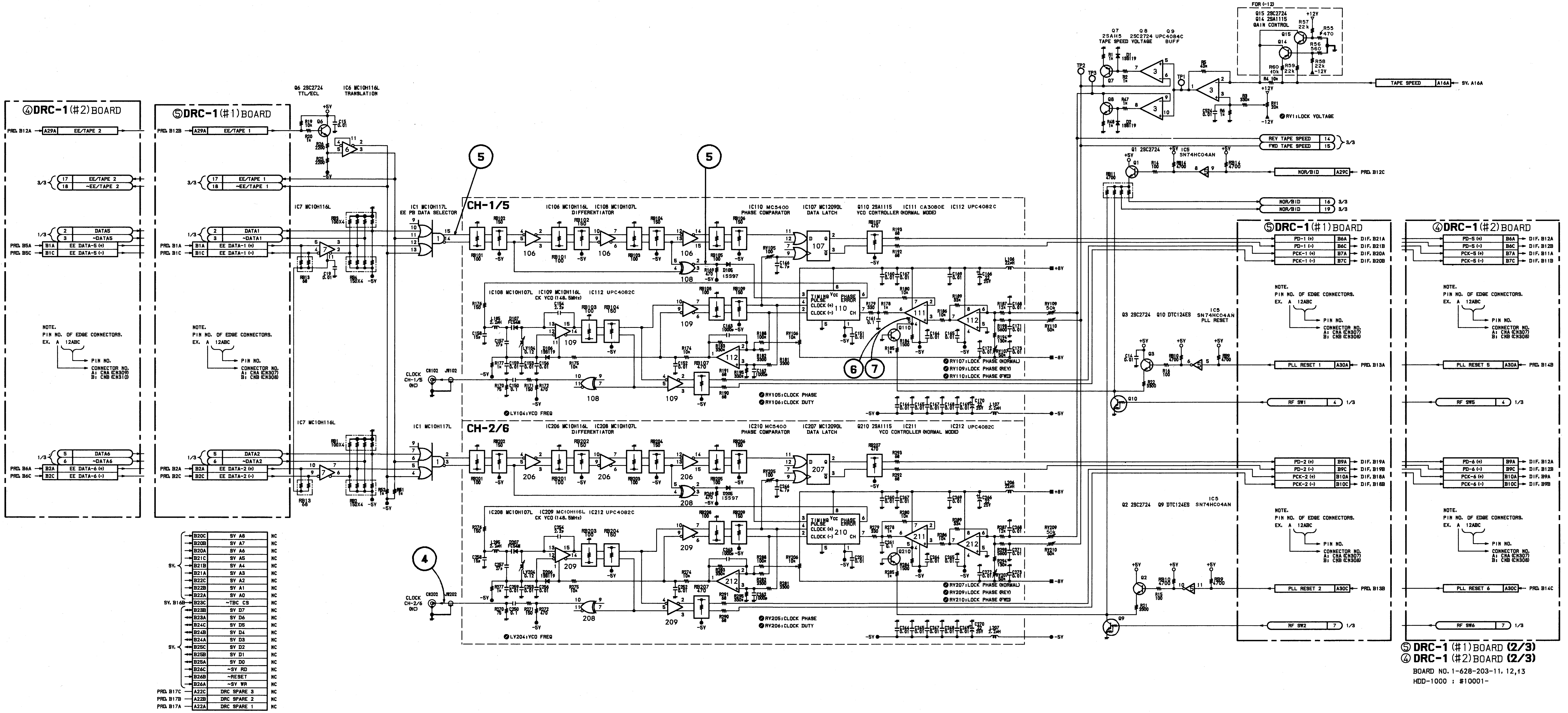
④DRC-1 (#2) BOARD
⑤DRC-1 (#1) BOARD
PRD. B12A A29A EE/TAPE 2
PRD. B12B A29A EE/TAPE 1
3/3 17 EE/TAPE 2
18 ~EE/TAPE 2
3/3 17 EE/TAPE 1
18 ~EE/TAPE 1
1/3 2 DATA5
3 ~DATA5
PRD. B5A B1A EE DATA-5 (+)
PRD. B5C B1C EE DATA-5 (–)
1/3 2 DATA1
3 ~DATA1
PRD. B1A B1A EE DATA-1 (+)
PRD. B1C B1C EE DATA-1 (–)
1/3 5 DATA6
6 ~DATA6
PRD. B6A B2A EE DATA-6 (+)
PRD. B6C B2C EE DATA-6 (–)
1/3 5 DATA2
6 ~DATA2
PRD. B2A B2A EE DATA-2 (+)
PRD. B2C B2C EE DATA-2 (–)
NOTE.
PIN NO. OF EDGE CONNECTORS.
EX. A 12ABC
PIN NO.
CONNECTOR NO.
A: CNA (CN309)
B: CNB (CN310)
A: CNA (CN307)
B: CNB (CN308)
Q6 2SC2724 TTL/ECL
IC6 MC10H116L TRANSLATION
IC7 MC10H116L
IC1 MC10H117L EE PB DATA SELECTOR
CH-1/5
CH-2/6
IC106 MC10H116L IC108 MC10H107L DIFFERENTIATOR
IC110 MC5400 PHASE COMPARATOR
IC107 MC12090L DATA LATCH
Q110 2SA1115 IC111 CA3080E IC112 UPC4082C VCO CONTROLLER (NORMAL MODE)
IC108 MC10H107L IC109 MC10H116L IC112 UPC4082C CK VCO (148.5MHz)
IC206 MC10H116L IC208 MC10H107L DIFFERENTIATOR
IC210 MC5400 PHASE COMPARATOR
IC207 MC12090L DATA LATCH
Q210 2SA1115 IC211 IC212 UPC4082C VCO CONTROLLER (NORMAL MODE)
IC208 MC10H107L IC209 MC10H116L IC212 UPC4082C CK VCO (148.5MHz)
TIMING PULSE CLOCK (+) CLOCK (–) PHASE ERROR
CLOCK CH-1/5 (NC)
CLOCK CH-2/6 (NC)
RV105: CLOCK PHASE
RV106: CLOCK DUTY
RV107: LOCK PHASE (NORMAL)
RV109: LOCK PHASE (REV)
RV110: LOCK PHASE (FWD)
LY104: VCO FREQ
RV205: CLOCK PHASE
RV206: CLOCK DUTY
RV207: LOCK PHASE (NORMAL)
RV209: LOCK PHASE (REV)
RV210: LOCK PHASE (FWD)
LY204: VCO FREQ
④
⑤
⑥
⑦
FOR (–12)
Q15 2SC2724
Q14 2SA1115
GAIN CONTROL
Q7 2SA1115 TAPE SPEED
Q8 2SC2724 VOLTAGE
Q9 UPC4084C BUFF
TP1
TP2
TP3
RV1: LOCK VOLTAGE
TAPE SPEED A16A SV. A16A
REV TAPE SPEED 14
FWD TAPE SPEED 15
3/3
Q1 2SC2724
IC5 SN74HC04AN
NOR/BID A29C PRD. B12C
NOR/BID 16 3/3
NOR/BID 19 3/3
Q3 2SC2724 Q10 DTC124ES
IC5 SN74HC04AN PLL RESET
Q2 2SC2724 Q9 DTC124ES
PD-1 (+) B6A DIF. B21A
PD-1 (–) B6C DIF. B21B
PCK-1 (+) B7A DIF. B20A
PCK-1 (–) B7C DIF. B20B
PD-5 (+) B6A DIF. B12A
PD-5 (–) B6C DIF. B12B
PCK-5 (+) B7A DIF. B11A
PCK-5 (–) B7C DIF. B11B
PLL RESET 1 A30A PRD. B13A
PLL RESET 5 A30A PRD. B14B
RF SW1 4 1/3
RF SW5 4 1/3
PD-2 (+) B9A DIF. B19A
PD-2 (–) B9C DIF. B19B
PCK-2 (+) B10A DIF. B18A
PCK-2 (–) B10C DIF. B18B
PD-6 (+) B9A DIF. B12A
PD-6 (–) B9C DIF. B12B
PCK-6 (+) B10A DIF. B9A
PCK-6 (–) B10C DIF. B9B
PLL RESET 2 A30C PRD. B13B
PLL RESET 6 A30C PRD. B14C
RF SW2 7 1/3
RF SW6 7 1/3
SV. B20C SV A8 NC
B20B SV A7 NC
B20A SV A6 NC
B21C SV A5 NC
B21B SV A4 NC
B21A SV A3 NC
B22C SV A2 NC
B22B SV A1 NC
B22A SV A0 NC
SV. B16B B23C ~TBC CS NC
SV. B23B SV D7 NC
B23A SV D6 NC
B24C SV D5 NC
B24B SV D4 NC
B24A SV D3 NC
B25C SV D2 NC
B25B SV D1 NC
B25A SV D0 NC
B26C ~SV RD NC
B26B ~RESET NC
B26A ~SV WR NC
PRD. B17C A22C DRC SPARE 3 NC
PRD. B17B A22B DRC SPARE 2 NC
PRD. B17A A22A DRC SPARE 1 NC

**⑤ DRC-1** (#1) BOARD **(2/3)**
**④ DRC-1** (#2) BOARD **(2/3)**
BOARD NO. 1-628-203-11, 12,13
HDD-1000 : #10001-

## DRC-1 BOARD (3/3)

Video PB Equalizer and PB Clock PLL

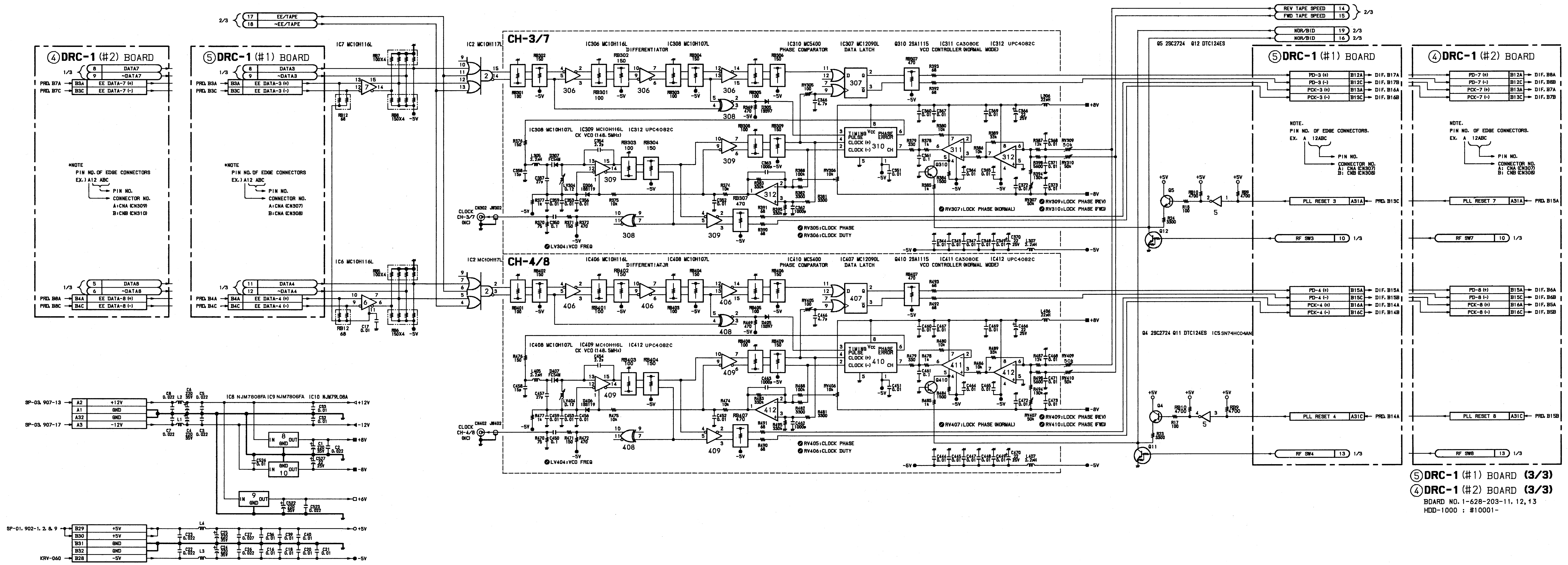
④DRC-1 (#2) BOARD
⑤DRC-1 (#1) BOARD
⑤DRC-1 (#1) BOARD
④DRC-1 (#2) BOARD
CH-3/7
CH-4/8
IC306 MC10H116L DIFFERENTIATOR
IC308 MC10H107L
IC310 MC5400 PHASE COMPARATOR
IC307 MC12090L DATA LATCH
Q310 2SA1115
IC311 CA3080E
IC312 UPC4082C
VCO CONTROLLER(NORMAL MODE)
IC308 MC10H107L
IC309 MC10H116L CK VCO(148.5MHz)
IC312 UPC4082C
IC406 MC10H116L DIFFERENTIATOR
IC408 MC10H107L
IC410 MC5400 PHASE COMPARATOR
IC407 MC12090L DATA LATCH
Q410 2SA1115
IC411 CA3080E
IC412 UPC4082C
IC409 MC10H116L CK VCO(148.5MHz)
IC7 MC10H116L
IC6 MC10H116L
IC2 MC10H117L
Q5 2SC2724
Q12 DTC124ES
Q4 2SC2724
Q11 DTC124ES
IC5 SN74HC04AN
IC8 NJM7808FA
IC9 NJM7806FA
IC10 NJM79L08A
TIMING PULSE
PHASE ERROR
CLOCK (+)
CLOCK (-)
EE/TAPE
~EE/TAPE
REV TAPE SPEED
FWD TAPE SPEED
NOR/BID
NOR/BID
DATA7
~DATA7
EE DATA-7 (+)
EE DATA-7 (-)
DATA3
~DATA3
EE DATA-3 (+)
EE DATA-3 (-)
DATA8
~DATA8
EE DATA-8 (+)
EE DATA-8 (-)
DATA4
~DATA4
EE DATA-4 (+)
EE DATA-4 (-)
PD-3 (+)
PD-3 (-)
PCK-3 (+)
PCK-3 (-)
PD-7 (+)
PD-7 (-)
PCK-7 (+)
PCK-7 (-)
PD-4 (+)
PD-4 (-)
PCK-4 (+)
PCK-4 (-)
PD-8 (+)
PD-8 (-)
PCK-8 (+)
PCK-8 (-)
PLL RESET 3
PLL RESET 7
PLL RESET 4
PLL RESET 8
RF SW3
RF SW7
RF SW4
RF SW8
*NOTE
PIN NO. OF EDGE CONNECTORS
EX.) A12 ABC
PIN NO.
CONNECTOR NO.
A:CNA (CN309)
B:CNB (CN310)
A:CNA (CN307)
B:CNA (CN308)
CLOCK CH-3/7
CLOCK CH-4/8
LV304:VCO FREQ
LV404:VCO FREQ
RV305:CLOCK PHASE
RV306:CLOCK DUTY
RV405:CLOCK PHASE
RV406:CLOCK DUTY
RV307:LOCK PHASE (NORMAL)
RV309:LOCK PHASE (REV)
RV310:LOCK PHASE (FWD)
RV407:LOCK PHASE (NORMAL)
RV409:LOCK PHASE (REV)
RV410:LOCK PHASE (FWD)
SP-03, 907-13
SP-03, 907-17
SP-01, 902-1, 2 & 9
KRY-060
+12V
GND
-12V
+5V
-5V
+8V
-8V
+6V

⑤**DRC-1** (#1) BOARD **(3/3)**
④**DRC-1** (#2) BOARD **(3/3)**
BOARD NO. 1-628-203-11, 12, 13
HDD-1000 ; #10001-

## **PRD-1** **BOARD (1-628-202-11, 12)**

Component Side

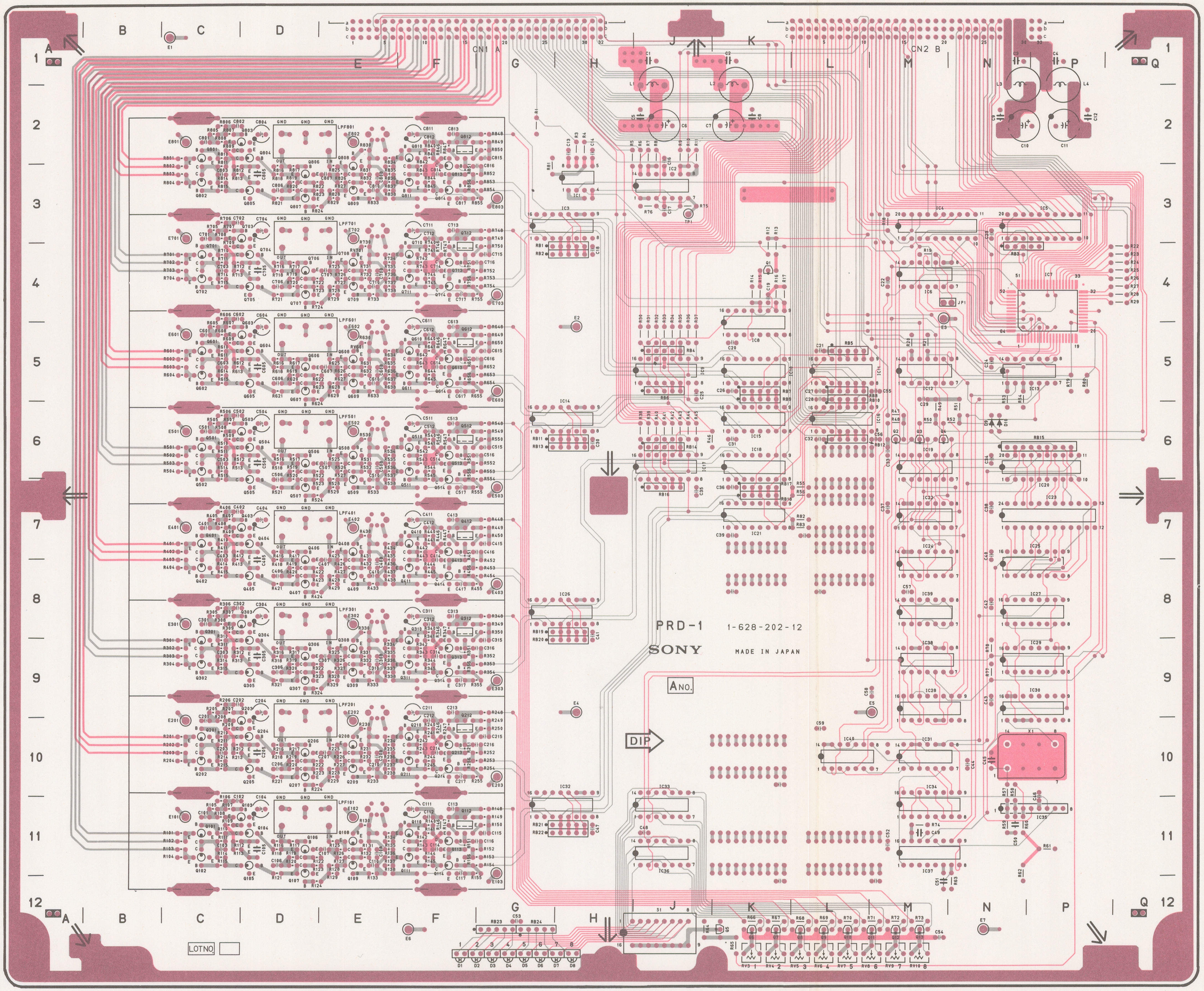

1-628-202-12 COMPONENT SIDE

1-628-202-12 SOLDER SIDE

### **PRD-1 (1-628-202-12)**

**HDD-1000**

| | | | | | | | |
|---|---|---|---|---|---|---|---|
| CN1 | G1 | IC29 | P9 | Q308 | E9 | Q811 | F3 |
| CN2 | M1 | IC30 | P9 | Q309 | E9 | Q812 | F2 |
| | | IC31 | M10 | Q310 | F8 | Q813 | F3 |
| D1 | F12 | IC32 | H10 | Q311 | F9 | Q814 | F3 |
| D2 | G12 | IC33 | J10 | Q312 | F8 | | |
| D3 | G12 | IC34 | M10 | Q313 | F9 | RB1 | G4 |
| D4 | G12 | IC35 | P11 | Q314 | F9 | RB2 | G4 |
| D5 | G12 | IC36 | J11 | Q401 | C7 | RB3 | N4 |
| D6 | G12 | IC37 | M11 | Q402 | C8 | RB4 | J5 |
| D7 | G12 | IC38 | M9 | Q403 | D7 | RB5 | L5 |
| D8 | H12 | IC39 | M8 | Q404 | D7 | RB6 | J5 |
| D9 | N6 | IC40 | L10 | Q405 | D8 | RB7 | K5 |
| D10 | N6 | | | Q406 | D7 | RB8 | M5 |
| | | JP1 | N4 | Q407 | D8 | RB9 | K5 |
| E1 | C1 | | | Q408 | E7 | RB10 | M5 |
| E2 | H4 | JS1 | M4 | Q409 | E8 | RB11 | G6 |
| E3 | M5 | | | Q410 | F7 | RB12 | M6 |
| E4 | H9 | LPF101 | E11 | Q411 | F8 | RB13 | G6 |
| E5 | M9 | LPF201 | E9 | Q412 | F7 | RB14 | J6 |
| E6 | F12 | LPF301 | E8 | Q413 | F8 | RB15 | P6 |
| E7 | N12 | LPF401 | E7 | Q414 | F8 | RB16 | J7 |
| E101 | C11 | LPF501 | E6 | Q501 | C6 | RB17 | K7 |
| E102 | E11 | LPF601 | E5 | Q502 | C7 | RB18 | K7 |
| E103 | G12 | LPF701 | E3 | Q503 | D6 | RB19 | G8 |
| E201 | C10 | LPF801 | E2 | Q504 | D6 | RB20 | G8 |
| E202 | E9 | | | Q505 | D7 | RB21 | G11 |
| E203 | G10 | Q1 | K4 | Q506 | D6 | RB22 | G11 |
| E301 | C8 | Q2 | M6 | Q507 | D7 | RB23 | G12 |
| E302 | E8 | Q3 | M6 | Q508 | E6 | RB24 | G12 |
| E303 | G9 | Q4 | M6 | Q509 | E7 | | |
| E401 | C7 | Q5 | K12 | Q510 | F6 | RV3 | K12 |
| E402 | E7 | Q6 | K12 | Q511 | F7 | RV4 | K12 |
| E403 | G8 | Q7 | K12 | Q512 | F6 | RV5 | L12 |
| E501 | C6 | Q8 | L12 | Q513 | F6 | RV6 | L12 |
| E502 | E6 | Q9 | L12 | Q514 | F7 | RV7 | L12 |
| E503 | G7 | Q10 | L12 | Q601 | C5 | RV8 | L12 |
| E601 | C5 | Q11 | M12 | Q602 | C5 | RV9 | M12 |
| E602 | E5 | Q12 | M12 | Q603 | D5 | RV10 | M12 |
| E603 | G5 | Q13 | M12 | Q604 | D5 | | |
| E701 | C3 | Q101 | C11 | Q605 | D5 | S1 | J12 |
| E702 | E3 | Q102 | C11 | Q606 | D5 | | |
| E703 | G4 | Q103 | D11 | Q607 | D5 | TP1 | J3 |
| E801 | C2 | Q104 | D11 | Q608 | E5 | | |
| E802 | E2 | Q105 | D12 | Q609 | E5 | X1 | P10 |
| E803 | G3 | Q106 | D11 | Q610 | F5 | | |
| | | Q107 | D12 | Q611 | F5 | | |
| IC1 | H3 | Q108 | E11 | Q612 | F5 | | |
| IC2 | J3 | Q109 | E12 | Q613 | F5 | | |
| IC3 | H3 | Q110 | F11 | Q614 | F5 | | |
| IC4 | M3 | Q111 | F11 | Q701 | C4 | | |
| IC5 | P3 | Q112 | F11 | Q702 | C4 | | |
| IC6 | M4 | Q113 | F11 | Q703 | D3 | | |
| IC7 | P4 | Q114 | F11 | Q704 | D4 | | |
| IC8 | K5 | Q201 | C10 | Q705 | D4 | | |
| IC9 | J5 | Q202 | C10 | Q706 | D4 | | |
| IC10 | K5 | Q203 | D9 | Q707 | D4 | | |
| IC11 | M5 | Q204 | D10 | Q708 | E4 | | |
| IC12 | M5 | Q205 | D10 | Q709 | E4 | | |
| IC13 | P5 | Q206 | D10 | Q710 | F4 | | |
| IC14 | H6 | Q207 | D10 | Q711 | F4 | | |
| IC15 | K6 | Q208 | E10 | Q712 | F3 | | |
| IC16 | M6 | Q209 | E10 | Q713 | F4 | | |
| IC17 | J6 | Q210 | F10 | Q714 | F4 | | |
| IC18 | K6 | Q211 | F10 | Q801 | C2 | | |
| IC19 | M6 | Q212 | F9 | Q802 | C3 | | |
| IC20 | P7 | Q213 | F10 | Q803 | D2 | | |
| IC21 | K7 | Q214 | F10 | Q804 | D2 | | |
| IC22 | M7 | Q301 | C8 | Q805 | D3 | | |
| IC23 | P7 | Q302 | C9 | Q806 | D2 | | |
| IC24 | M7 | Q303 | D8 | Q806 | D3 | | |
| IC25 | P7 | Q304 | D8 | Q807 | D3 | | |
| IC26 | H8 | Q305 | D9 | Q808 | E2 | | |
| IC27 | P8 | Q306 | D9 | Q809 | E3 | | |
| IC28 | M9 | Q307 | D9 | Q810 | F2 | | |

## PRD-1 BOARD WAVEFORMS

OSCILLOSCOPE : TEKTRONIX 2465
VERTICAL : indicated on the photo itself
HORIZONTAL : indicated on the photo itself
FREQUENCY RESPONSE : 300 MHz or 20 MHz

①
REC
1/3 Q108

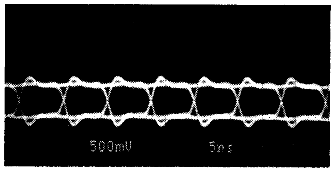

②
REC
1/3 R103

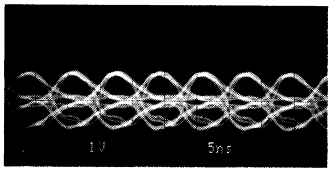

③
PLAY

3/3 CN305-21a

3/3 CN306-11b

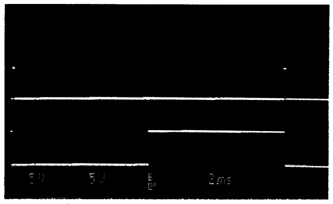

V周期部拡大
⇩

④
PLAY

3/3 CN305-21a

3/3 CN306-11b

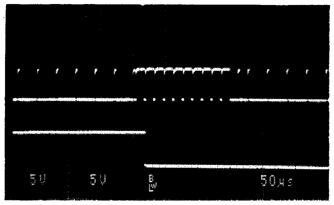

⑤ CTL
PLAY
3/3 TP1

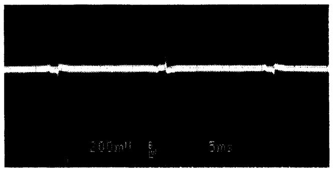

⑥ RF ENV
PLAY
3/3 TP1

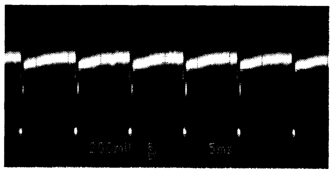

⑦
REC

3/3 CN306-27a

3/3 CN306-27c

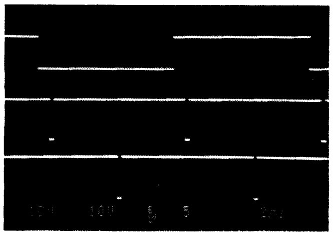

⑧
REC

3/3 CN305-4a

3/3 CN305-4b

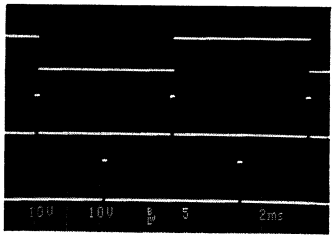

## PRD-1 BOARD (1/3)

Video REC Equalizer

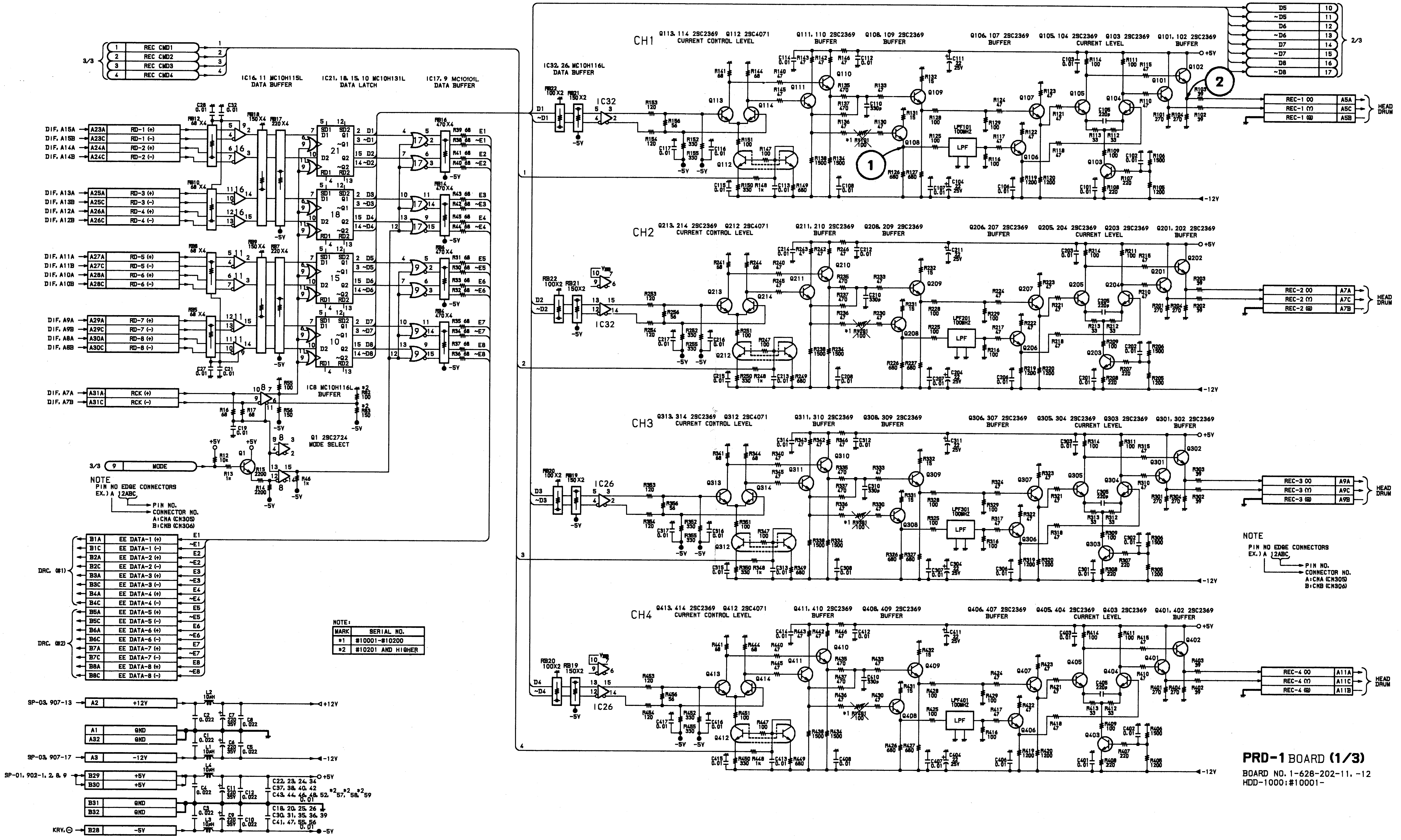
CH1
CH2
CH3
CH4
IC16, 11 MC10H115L DATA BUFFER
IC21, 18, 15, 10 MC10H131L DATA LATCH
IC17, 9 MC10101L DATA BUFFER
IC32, 26, MC10H116L DATA BUFFER
IC8 MC10H116L BUFFER
Q1 2SC2724 MODE SELECT
Q113, 114 2SC2369 Q112 2SC4071 CURRENT CONTROL LEVEL
Q111, 110 2SC2369 BUFFER
Q108, 109 2SC2369 BUFFER
Q106, 107 2SC2369 BUFFER
Q105, 104 2SC2369 Q103 2SC2369 CURRENT LEVEL
Q101, 102 2SC2369 BUFFER
LPF
REC-1 (X)
REC-1 (Y)
REC-1 (G)
HEAD DRUM
REC CMD1
REC CMD2
REC CMD3
REC CMD4
MODE
EE DATA-1 (+)
EE DATA-1 (-)
DRC (#1)
DRC (#2)
RCK (+)
RCK (-)
+12V
-12V
+5V
-5V
GND
SP-03, 907-13
SP-03, 907-17
SP-01, 902-1, 2, & 9
KRV.⊖
2/3
3/3
NOTE
PIN NO EDGE CONNECTORS
EX.) A 12ABC
PIN NO.
CONNECTOR NO.
A:CNA (CN305)
B:CNB (CN306)
①
②

NOTE:

| MARK | SERIAL NO. |
|---|---|
| *1 | #10001-#10200 |
| *2 | #10201 AND HIGHER |

**PRD-1** BOARD **(1/3)**
BOARD NO. 1-628-202-11, -12
HDD-1000:#10001-

## **PRD-1 BOARD (2/3)**

Video REC Equalizer

NOTE:

| MARK | SERIAL NO. |
|---|---|
| *1 | #10001-#10200 |

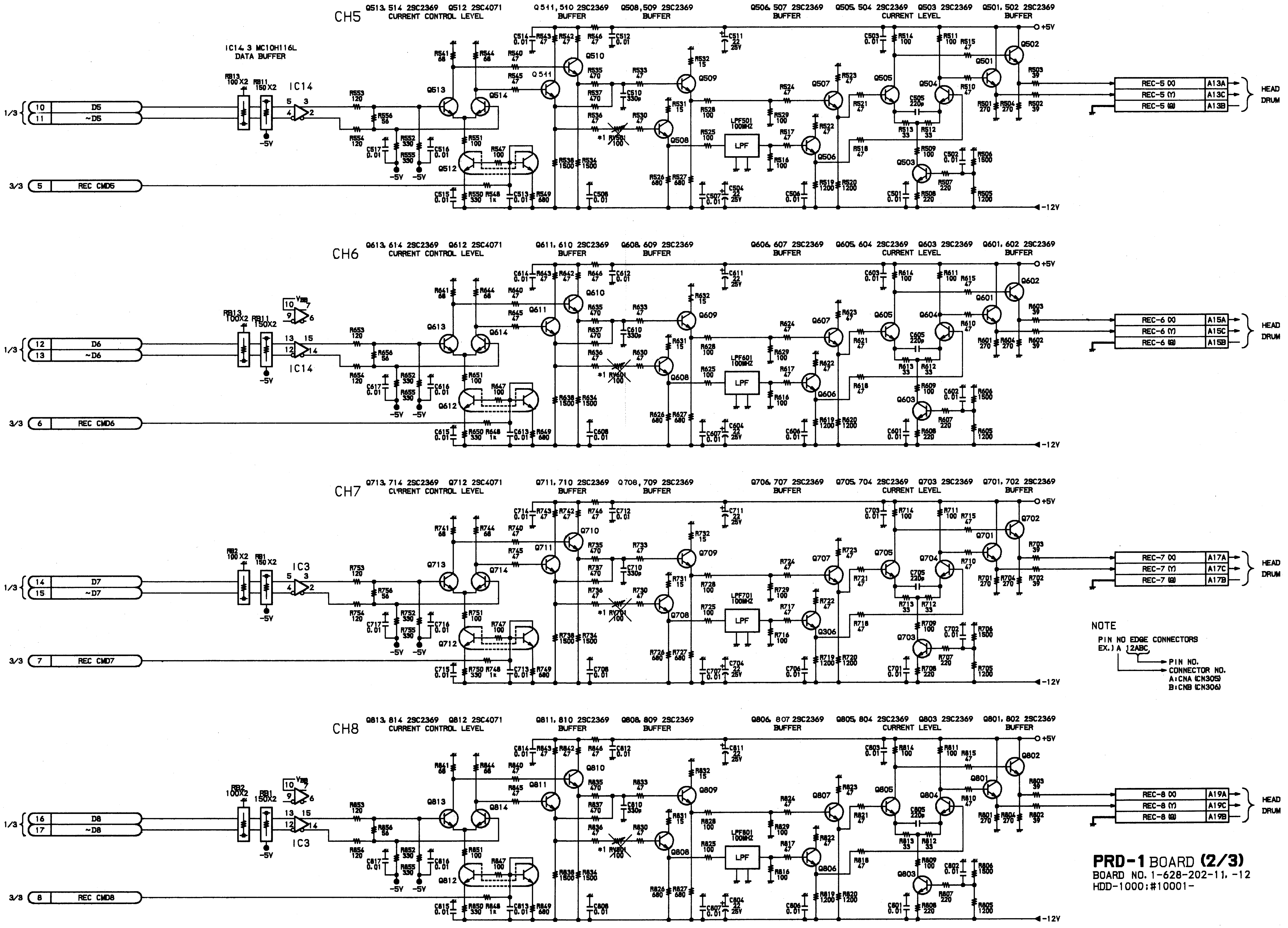
CH5
Q513, 514 2SC2369 Q512 2SC4071 CURRENT CONTROL LEVEL
Q511, 510 2SC2369 BUFFER
Q508, 509 2SC2369 BUFFER
Q506, 507 2SC2369 BUFFER
Q505, 504 2SC2369 Q503 2SC2369 CURRENT LEVEL
Q501, 502 2SC2369 BUFFER
IC14, 3 MC10H116L DATA BUFFER
IC14
1/3
D5
~D5
3/3
REC CMD5
LPF501 100MHz
LPF
+5V
-12V
-5V
REC-5 (X) A13A
REC-5 (Y) A13C
REC-5 (G) A13B
HEAD DRUM
CH6
Q613, 614 2SC2369 Q612 2SC4071 CURRENT CONTROL LEVEL
Q611, 610 2SC2369 BUFFER
Q608, 609 2SC2369 BUFFER
Q606, 607 2SC2369 BUFFER
Q605, 604 2SC2369 Q603 2SC2369 CURRENT LEVEL
Q601, 602 2SC2369 BUFFER
D6
~D6
REC CMD6
LPF601 100MHz
REC-6 (X) A15A
REC-6 (Y) A15C
REC-6 (G) A15B
CH7
Q713, 714 2SC2369 Q712 2SC4071 CURRENT CONTROL LEVEL
Q711, 710 2SC2369 BUFFER
Q708, 709 2SC2369 BUFFER
Q706, 707 2SC2369 BUFFER
Q705, 704 2SC2369 Q703 2SC2369 CURRENT LEVEL
Q701, 702 2SC2369 BUFFER
IC3
D7
~D7
REC CMD7
LPF701 100MHz
REC-7 (X) A17A
REC-7 (Y) A17C
REC-7 (G) A17B
CH8
Q813, 814 2SC2369 Q812 2SC4071 CURRENT CONTROL LEVEL
Q811, 810 2SC2369 BUFFER
Q808, 809 2SC2369 BUFFER
Q806, 807 2SC2369 BUFFER
Q805, 804 2SC2369 Q803 2SC2369 CURRENT LEVEL
Q801, 802 2SC2369 BUFFER
D8
~D8
REC CMD8
LPF801 100MHz
REC-8 (X) A19A
REC-8 (Y) A19C
REC-8 (G) A19B

NOTE

PIN NO EDGE CONNECTORS
EX.) A 12ABC
PIN NO.
CONNECTOR NO.
A:CNA (CN305)
B:CNB (CN306)

**PRD-1** BOARD **(2/3)**
BOARD NO. 1-628-202-11, -12
HDD-1000;#10001-

## PRD-1 BOARD (3/3)

Video REC Equalizer

S/N up to 10199

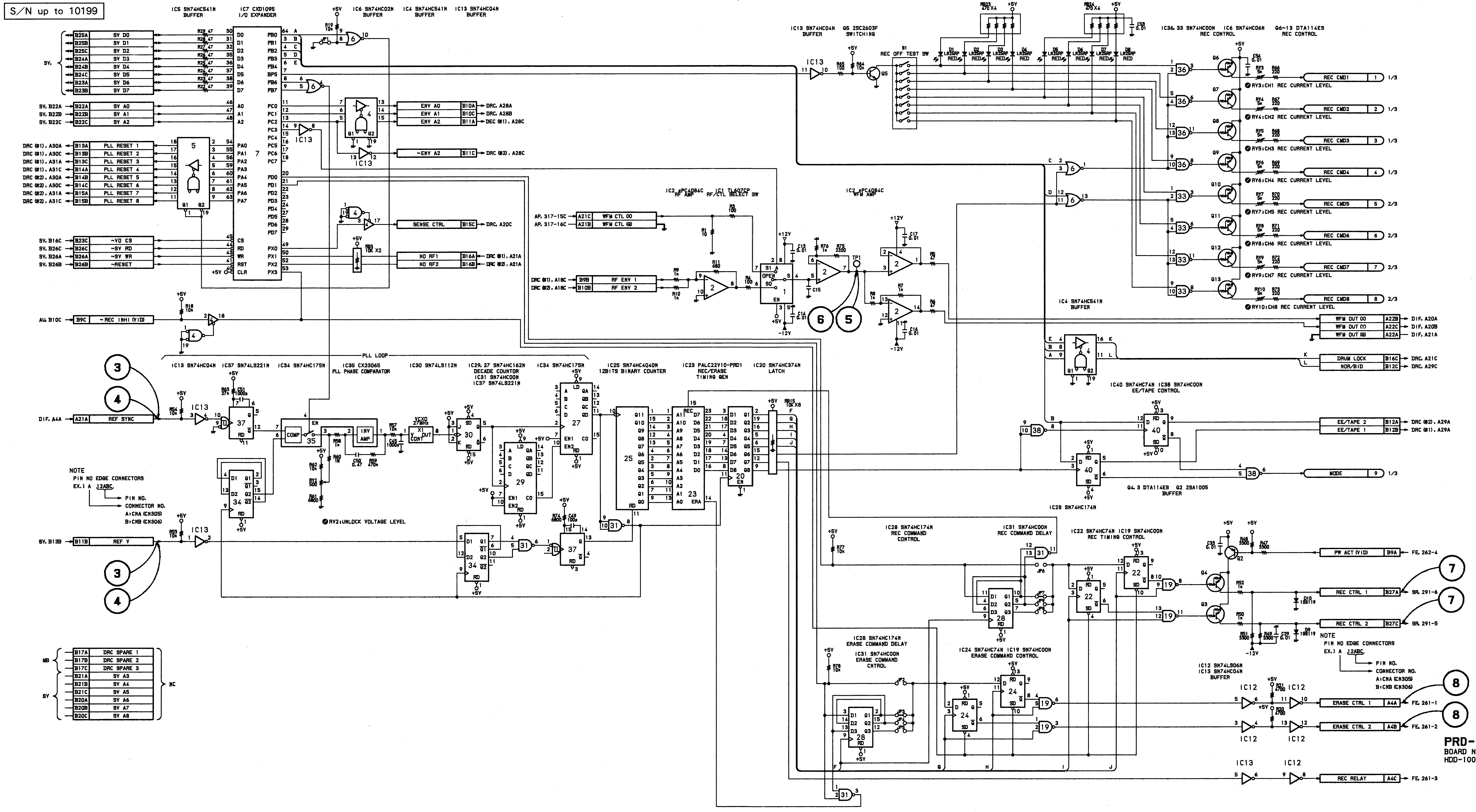
IC5 SN74HC541N BUFFER
IC7 CXD1095 I/O EXPANDER
IC6 SN74HC02N BUFFER
IC4 SN74HC541N BUFFER
IC13 SN74HC04N BUFFER
SY DO
SY D1
SY D2
SY D3
SY D4
SY D5
SY D6
SY D7
SY A0
SY A1
SY A2
PLL RESET 1
PLL RESET 2
PLL RESET 3
PLL RESET 4
PLL RESET 5
PLL RESET 6
PLL RESET 7
PLL RESET 8
~YO CS
~SY RD
~SY WR
~RESET
ENV A0
ENV A1
ENV A2
~ENV A2
SENSE CTRL
NO RF1
NO RF2
~REC INHI (VID)
PLL LOOP
IC13 SN74HC04N
IC37 SN74LS221N
IC34 SN74HC175N
IC35 CX23065 PLL PHASE COMPARATOR
IC30 SN74LS112N
IC29, 27 SN74HC162N DECADE COUNTOR
IC31 SN74HC00N
IC37 SN74LS221N
IC34 SN74HC175N
IC25 SN74HC4040N 12BITS BINARY COUNTER
IC23 PALC22V10-PRD1 REC/ERASE TIMING GEN
IC20 SN74HC374N LATCH
REF SYNC
REF V
COMP
INV AMP
VCXO 27MHz
RV2:UNLOCK VOLTAGE LEVEL
NOTE
PIN NO EDGE CONNECTORS
EX.) A J2ABC
PIN NO.
CONNECTOR NO.
A:CNA (CN305)
B:CNB (CN306)
DRC SPARE 1
DRC SPARE 2
DRC SPARE 3
SY A3
SY A4
SY A5
SY A6
SY A7
SY A8
IC2 μPC4084C RF AMP
IC1 TL497CP RF/CYL SELECT SW
IC2 μPC4084C WFM AMP
WFM CTL 00
WFM CTL (1)
RF ENV 1
RF ENV 2
TP1
IC13 SN74HC04N BUFFER
Q5 2SC2603F SWITCHING
REC OFF TEST SW
IC36, 33 SN74HC00N REC CONTROL
IC6 SN74HC06N
Q6-13 DTA114ES REC CONTROL
REC CMD1
REC CMD2
REC CMD3
REC CMD4
REC CMD5
REC CMD6
REC CMD7
REC CMD8
RV3:CH1 REC CURRENT LEVEL
RV4:CH2 REC CURRENT LEVEL
RV5:CH3 REC CURRENT LEVEL
RV6:CH4 REC CURRENT LEVEL
RV7:CH5 REC CURRENT LEVEL
RV8:CH6 REC CURRENT LEVEL
RV9:CH7 REC CURRENT LEVEL
RV10:CH8 REC CURRENT LEVEL
IC4 SN74HC541N BUFFER
WFM OUT 00
WFM OUT (1)
WFM OUT (2)
DRUM LOCK
NOR/BID
IC40 SN74HC74N IC38 SN74HC00N EE/TAPE CONTROL
EE/TAPE 2
EE/TAPE 1
MODE
Q4, 3 DTA114ES Q2 2SA1005 BUFFER
IC28 SN74HC174N
IC28 SN74HC174N REC COMMAND CONTROL
IC31 SN74HC00N REC COMMAND DELAY
IC22 SN74HC74N IC19 SN74HC00N REC TIMING CONTROL
PW ACT (VID)
REC CTRL 1
REC CTRL 2
IC28 SN74HC174N ERASE COMMAND DELAY
IC31 SN74HC00N ERASE COMMAND CNTROL
IC24 SN74HC74N IC19 SN74HC00N ERASE COMMAND CONTROL
IC12 SN74LS06N IC13 SN74HC04N BUFFER
ERASE CTRL 1
ERASE CTRL 2
REC RELAY
FE. 262-4
SR. 291-6
SR. 291-5
FE. 261-1
FE. 261-2
FE. 261-3
③
④
⑤
⑥
⑦
⑧

**PRD-1** BOARD (3/3)
BOARD NO. 1-628-202-11
HDD-1000:#10001-10199

## PRD-1 BOARD (3/3)

Video REC Equalizer

S/N 10201 and higher

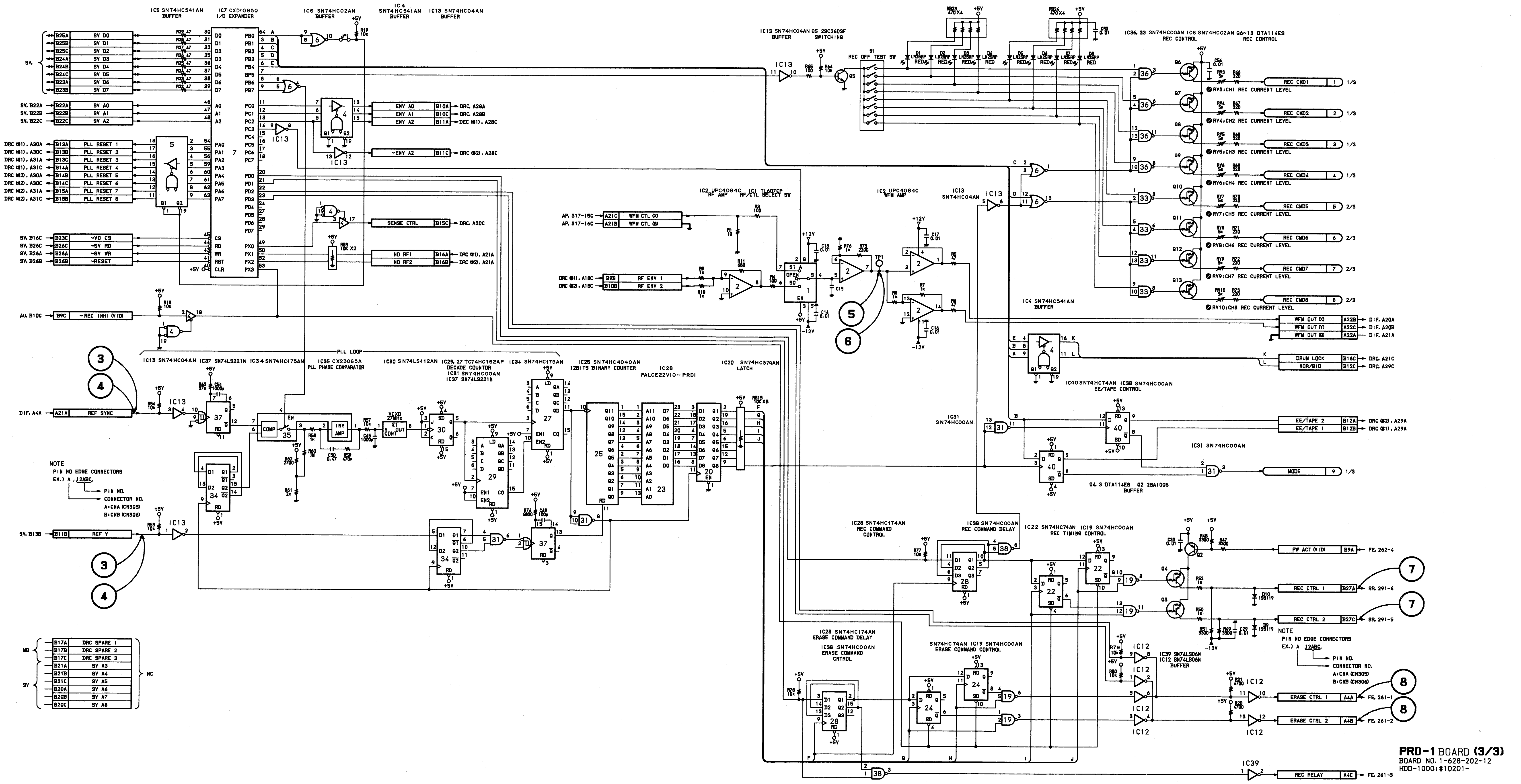
IC5 SN74HC541AN BUFFER
IC7 CXD1095Q I/O EXPANDER
IC6 SN74HC02AN BUFFER
IC4 SN74HC541AN BUFFER
IC13 SN74HC04AN BUFFER
SY D0
SY D1
SY D2
SY D3
SY D4
SY D5
SY D6
SY D7
SY A0
SY A1
SY A2
PLL RESET 1
PLL RESET 2
PLL RESET 3
PLL RESET 4
PLL RESET 5
PLL RESET 6
PLL RESET 7
PLL RESET 8
~YO CS
~SY RD
~SY WR
~RESET
ENV A0
ENV A1
ENV A2
~ENV A2
SENSE CTRL
NO RF1
NO RF2
~REC INH1 (VID)
PLL LOOP
IC15 SN74HC04AN
IC37 SN74LS221N
IC34 SN74HC175AN
IC35 CX23065A PLL PHASE COMPARATOR
IC30 SN74LS112AN
IC29, 27 TC74HC162AP DECADE COUNTOR
IC31 SN74HC00AN
IC37 SN74LS221N
IC34 SN74HC175AN
IC25 SN74HC4040AN 12BITS BINARY COUNTER
IC28 PALCE22V10-PRD1
IC20 SN74HC374AN LATCH
REF SYNC
REF Y
COMP
INV AMP
VCXO
NOTE
PIN NO EDGE CONNECTORS
EX.) A 12ABC
PIN NO.
CONNECTOR NO.
A:CNA (CN305)
B:CNB (CN306)
DRC SPARE 1
DRC SPARE 2
DRC SPARE 3
SY A3
SY A4
SY A5
SY A6
SY A7
SY A8
NC
IC13 SN74HC04AN
Q5 2SC2603F SWITCHING
S1 REC OFF TEST SW
IC2 UPC4084C RF AMP
IC1 TL607CP RF/CTL SELECT SW
IC2 UPC4084C WFM AMP
WFM CTL 00
WFM CTL 60
RF ENV 1
RF ENV 2
IC36, 33 SN74HC00AN REC CONTROL
IC6 SN74HC02AN
Q6-13 DTA114ES REC CONTROL
REC CMD1
REC CMD2
REC CMD3
REC CMD4
REC CMD5
REC CMD6
REC CMD7
REC CMD8
RY3:CH1 REC CURRENT LEVEL
RY4:CH2 REC CURRENT LEVEL
RY5:CH3 REC CURRENT LEVEL
RY6:CH4 REC CURRENT LEVEL
RY7:CH5 REC CURRENT LEVEL
RY8:CH6 REC CURRENT LEVEL
RY9:CH7 REC CURRENT LEVEL
RY10:CH8 REC CURRENT LEVEL
IC4 SN74HC541AN BUFFER
WFM OUT 00
WFM OUT (Y)
WFM OUT 60
DRUM LOCK
NOR/BID
IC40 SN74HC74AN
IC38 SN74HC00AN EE/TAPE CONTROL
EE/TAPE 2
EE/TAPE 1
IC31 SN74HC00AN
MODE
Q4, 3 DTA114ES
Q2 2SA1005 BUFFER
IC28 SN74HC174AN REC COMMAND CONTROL
IC38 SN74HC00AN REC COMMAND DELAY
IC22 SN74HC74AN
IC19 SN74HC00AN REC TIMING CONTROL
PW ACT (VID)
REC CTRL 1
REC CTRL 2
IC28 SN74HC174AN ERASE COMMAND DELAY
IC38 SN74HC00AN ERASE COMMAND CNTROL
SN74HC74AN IC19 SN74HC00AN ERASE COMMAND CONTROL
IC39 SN74LS06N
IC12 SN74LS06N BUFFER
ERASE CTRL 1
ERASE CTRL 2
REC RELAY
1/3
2/3
3
4
5
6
7
8
A
B
C
D
E
F
G
H
I
J
K
L
1
2
3
4
5

**PRD-1** BOARD **(3/3)**
BOARD NO. 1-628-202-12
HDD-1000:#10201-

## AU-109 BOARD (1-628-201-11)

S/N up to 10199

Component Side

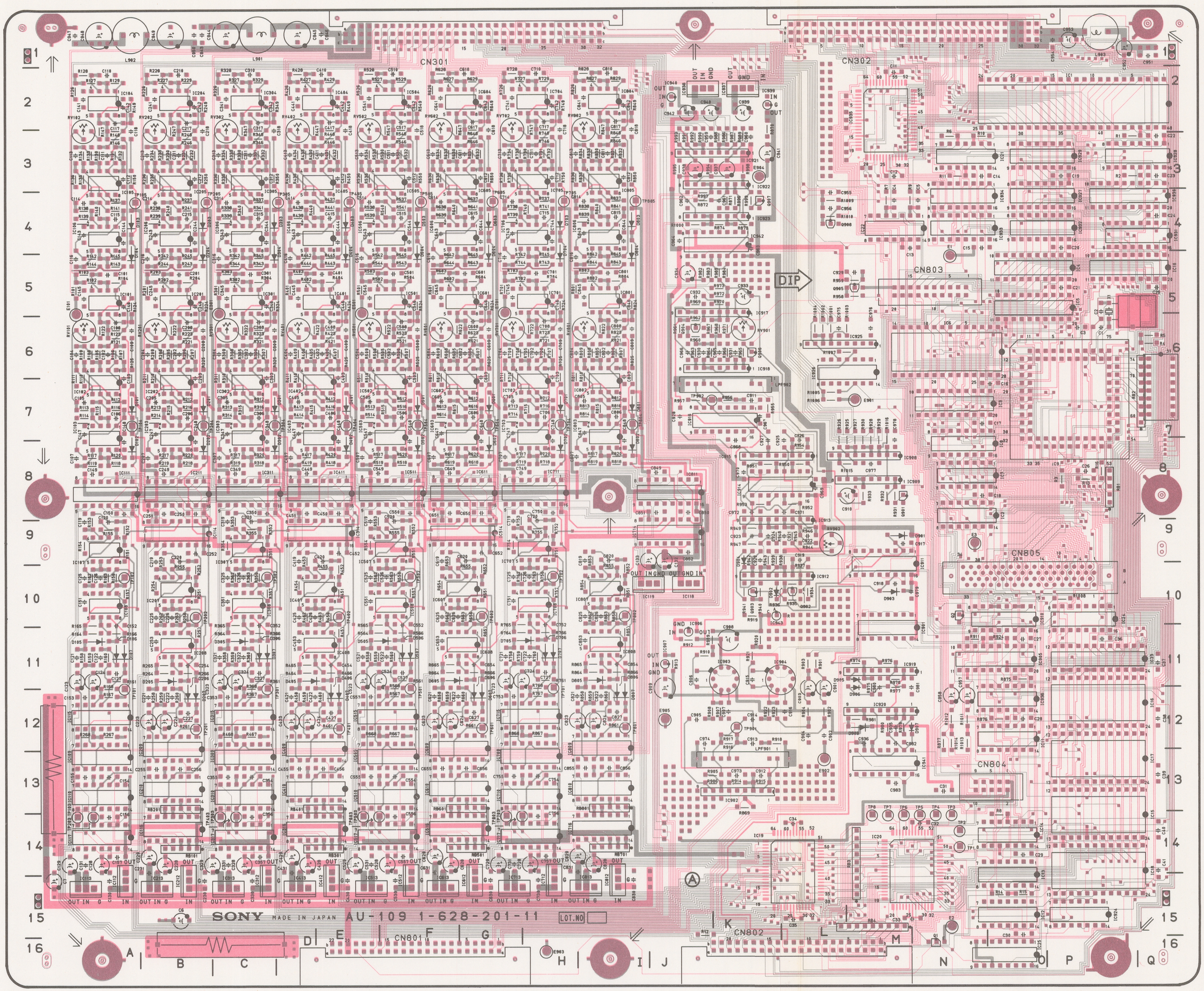

1-628-201-11 COMPONENT SIDE

1-628-201-11 SOLDER SIDE

**AU-109(1-628-201-11)**

**HDD-1000**

| | |
|---|---|
| CN301 | F1 |
| CN302 | M1 |
| CN801 | F15 |
| CN802 | K15 |
| CN803 | N5 |
| CN804 | N13 |
| CN805 | O9 |
| D101 | A7 |
| D102 | A8 |
| D103 | A4 |
| D104 | A5 |
| D105 | A11 |
| D106 | A11 |
| D107 | A11 |
| D201 | B7 |
| D202 | B8 |
| D203 | B4 |
| D204 | B5 |
| D205 | B11 |
| D206 | B11 |
| D207 | B12 |
| D301 | D7 |
| D302 | D8 |
| D303 | D4 |
| D304 | D5 |
| D305 | C11 |
| D306 | C11 |
| D307 | C11 |
| D401 | E7 |
| D402 | E8 |
| D403 | E4 |
| D404 | E5 |
| D405 | D11 |
| D406 | E11 |
| D407 | E12 |
| D501 | F7 |
| D502 | F8 |
| D503 | F4 |
| D504 | F5 |
| D505 | E11 |
| D506 | F11 |
| D507 | F11 |
| D601 | G7 |
| D602 | G8 |
| D603 | G4 |
| D604 | G5 |
| D605 | F11 |
| D606 | G11 |
| D607 | G12 |
| D701 | H7 |
| D702 | H8 |
| D703 | H4 |
| D704 | H5 |
| D705 | G11 |
| D706 | H11 |
| D707 | H11 |
| D801 | I7 |
| D802 | I8 |
| D803 | I4 |
| D804 | I5 |
| D805 | I11 |
| D806 | I11 |
| D807 | I12 |
| D901 | N9 |
| D902 | K10 |
| D903 | M10 |
| D904 | K9 |
| D905 | L11 |
| D906 | M12 |
| D907 | N12 |
| D908 | M12 |
| E1 | N4 |
| E2 | N15 |
| E3 | N9 |
| E101 | A5 |
| E301 | C5 |
| E501 | E5 |
| E701 | G5 |
| E901 | M7 |
| E902 | L13 |
| E903 | H16 |
| E904 | K3 |
| E905 | J12 |
| IC1 | P2 |
| IC2 | O8 |
| IC3 | O7 |
| IC4 | P5 |
| IC5 | P5 |
| IC6 | N6 |
| IC7 | O8 |
| IC8 | O8 |
| IC9 | P8 |
| IC10 | Q5 |
| IC11 | O12 |
| IC12 | O15 |
| IC13 | O15 |
| IC14 | O14 |
| IC15 | Q14 |
| IC16 | Q12 |
| IC17 | Q13 |
| IC18 | Q14 |
| IC19 | K14 |
| IC20 | M14 |
| IC21 | O3 |
| IC22 | M4 |
| IC23 | Q11 |
| IC24 | P10 |
| IC25 | O16 |
| IC101 | A5 |
| IC102 | A7 |
| IC103 | A7 |
| IC104 | A2 |
| IC105 | A3 |
| IC106 | A4 |
| IC107 | A9 |
| IC108 | A10 |
| IC109 | A13 |
| IC110 | A13 |
| IC111 | A8 |
| IC112 | A15 |
| IC113 | A15 |
| IC114 | C9 |
| IC115 | A12 |
| IC116 | B14 |
| IC117 | A14 |
| IC118 | J10 |
| IC119 | I10 |
| IC201 | B5 |
| IC202 | B7 |
| IC203 | B7 |
| IC204 | B2 |
| IC205 | B3 |
| IC206 | B4 |
| IC207 | B10 |
| IC208 | B11 |
| IC209 | B12 |
| IC210 | B13 |
| IC211 | B8 |
| IC212 | B15 |
| IC213 | B15 |
| IC301 | C5 |
| IC302 | C7 |
| IC303 | C7 |
| IC304 | C2 |
| IC305 | C3 |
| IC306 | C4 |
| IC307 | C9 |
| IC308 | C10 |
| IC309 | C13 |
| IC310 | C13 |
| IC311 | C8 |
| IC312 | C15 |
| IC313 | C15 |
| IC314 | E9 |
| IC315 | C12 |
| IC316 | D14 |
| IC317 | C14 |
| IC401 | E5 |
| IC402 | D7 |
| IC403 | D7 |
| IC404 | E2 |
| IC405 | E3 |
| IC406 | D4 |
| IC407 | D10 |
| IC408 | E11 |
| IC409 | D12 |
| IC410 | D13 |
| IC411 | E8 |
| IC412 | E15 |
| IC413 | D15 |
| IC501 | F5 |
| IC502 | E7 |
| IC503 | E7 |
| IC504 | F2 |
| IC505 | F3 |
| IC506 | E4 |
| IC507 | E9 |
| IC508 | F10 |
| IC509 | E13 |
| IC510 | E13 |
| IC511 | F8 |
| IC512 | F15 |
| IC513 | E15 |
| IC514 | G9 |
| IC515 | E12 |
| IC516 | F14 |
| IC517 | E14 |
| IC601 | G5 |
| IC602 | F7 |
| IC603 | F7 |
| IC604 | G2 |
| IC605 | G3 |
| IC606 | F4 |
| IC607 | F10 |
| IC608 | G11 |
| IC609 | F12 |
| IC610 | F13 |
| IC611 | G8 |
| IC612 | G15 |
| IC613 | F15 |
| IC701 | H5 |
| IC702 | G7 |
| IC703 | G7 |
| IC704 | H2 |
| IC705 | H3 |
| IC706 | G4 |
| IC707 | G9 |
| IC708 | H10 |
| IC709 | G13 |
| IC710 | G13 |
| IC711 | H8 |
| IC712 | H15 |
| IC713 | G15 |
| IC714 | I9 |
| IC715 | G12 |
| IC716 | H14 |
| IC717 | G14 |
| IC801 | I5 |
| IC802 | I7 |
| IC803 | I7 |
| IC804 | I2 |
| IC805 | I3 |
| IC806 | I4 |
| IC807 | I10 |
| IC808 | I11 |
| IC809 | H12 |
| IC810 | H13 |
| IC811 | J8 |
| IC812 | I15 |
| IC813 | I15 |
| IC901 | N11 |
| IC902 | K13 |
| IC903 | K11 |
| IC904 | K11 |
| IC905 | O11 |
| IC906 | J11 |
| IC907 | J11 |
| IC908 | M8 |
| IC909 | M8 |
| IC910 | O10 |
| IC911 | N10 |
| IC912 | L10 |
| IC913 | L8 |
| IC914 | K8 |
| IC915 | K8 |
| IC916 | J7 |
| IC917 | K5 |
| IC918 | K6 |
| IC919 | M11 |
| IC920 | M12 |
| IC921 | K3 |
| IC922 | K3 |
| IC923 | K4 |
| IC924 | P15 |
| IC925 | M6 |
| IC926 | L6 |
| IC927 | P4 |
| IC928 | Q3 |
| IC929 | P3 |
| IC930 | Q4 |
| IC931 | Q4 |
| IC932 | P4 |
| 1C933 | O4 |
| IC934 | O4 |
| IC935 | M2 |
| IC936 | O12 |
| IC937 | K2 |
| IC938 | J2 |
| IC939 | K2 |
| IC940 | J2 |
| IC941 | N13 |
| IC942 | K4 |
| IC943 | K10 |
| LPF901 | K13 |
| LPF902 | K7 |
| Q1 | N16 |
| Q2 | N10 |
| Q901 | M8 |
| Q902 | L10 |
| Q903 | K10 |
| Q904 | J6 |
| Q905 | L5 |
| Q906 | K6 |
| Q907 | K4 |
| Q908 | M4 |
| RB1 | P8 |
| RB2 | P7 |
| RB3 | M14 |
| RB4 | M15 |
| RB101 | B14 |
| RB201 | B13 |
| RB301 | E14 |
| RB401 | D13 |
| RB501 | G14 |
| RB601 | F13 |
| RB701 | I14 |
| RB801 | I13 |
| RV101 | A6 |
| RV102 | A2 |
| RV201 | B6 |
| RV202 | B2 |
| RV301 | C6 |
| RV302 | C2 |
| RV401 | D6 |
| RV402 | D2 |
| RV501 | E6 |
| RV502 | E2 |
| RV601 | F6 |
| RV602 | F2 |
| RV701 | G6 |
| RV702 | G2 |
| RV801 | H6 |
| RV802 | H2 |
| RV901 | K6 |
| RV902 | L9 |
| S1 | Q6 |
| TP1 | N14 |
| TP2 | N14 |
| TP3 | N13 |
| TP4 | N13 |
| TP5 | N13 |
| TP6 | M13 |
| TP7 | M13 |
| TP8 | M13 |
| TP101 | A12 |
| TP102 | A10 |
| TP103 | A13 |
| TP104 | A7 |
| TP105 | A4 |
| TP201 | B12 |
| TP202 | B10 |
| TP203 | A14 |
| TP204 | B7 |
| TP205 | B4 |
| TP301 | D12 |
| TP302 | D10 |
| TP303 | C14 |
| TP304 | D7 |
| TP305 | D4 |
| TP401 | E12 |
| TP402 | E10 |
| TP403 | B14 |
| TP404 | E7 |
| TP405 | E4 |
| TP501 | F12 |
| TP502 | F10 |
| TP503 | E14 |
| TP504 | F7 |
| TP505 | F4 |
| TP601 | G12 |
| TP602 | G10 |
| TP603 | E14 |
| TP604 | G7 |
| TP605 | G4 |
| TP701 | H12 |
| TP702 | H10 |
| TP703 | G14 |
| TP704 | H7 |
| TP705 | H4 |
| TP801 | I12 |
| TP802 | I10 |
| TP803 | G14 |
| TP804 | I7 |
| TP805 | I4 |
| TP901 | K12 |
| TP902 | J7 |
| X1 | P5 |

## AU-109 BOARD (1-628-201-12, 13)

S/N 10201 and higher

Component Side

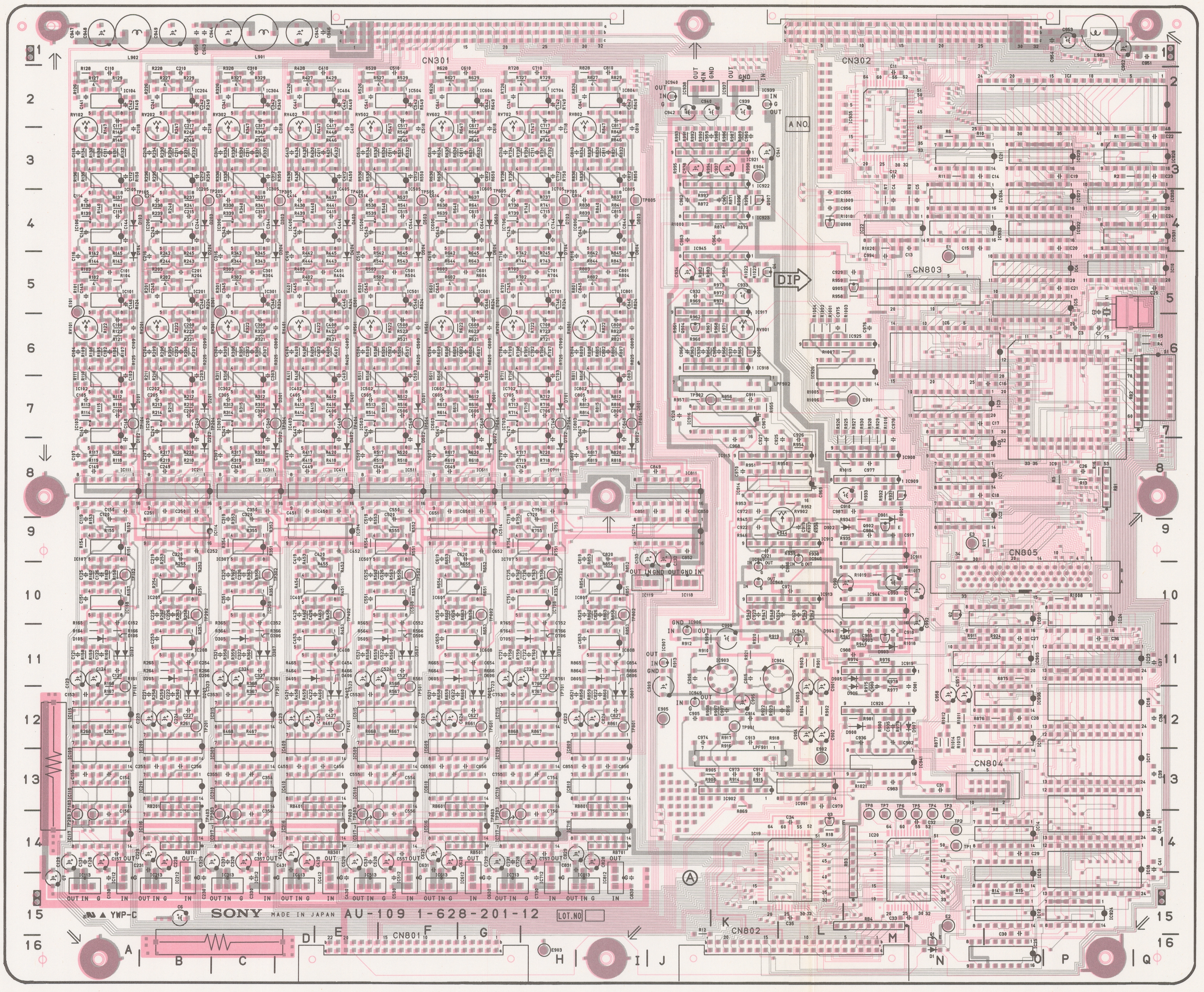

1-628-201-12 COMPONENT SIDE

1-628-201-12 SOLDER SIDE

**AU-109(1-628-201-12)**

**HDD-1000**

| | |
|---|---|
| CN301 | F1 |
| CN302 | M1 |
| CN801 | F16 |
| CN802 | K15 |
| CN803 | N5 |
| CN804 | N13 |
| CN805 | O9 |
| D1 | N16 |
| D101 | A7 |
| D102 | A8 |
| D103 | A4 |
| D104 | A5 |
| D105 | A11 |
| D106 | A11 |
| D107 | A11 |
| D201 | B7 |
| D202 | B8 |
| D203 | B4 |
| D204 | B5 |
| D205 | B11 |
| D206 | B11 |
| D207 | B12 |
| D301 | D7 |
| D302 | D8 |
| D303 | D4 |
| D304 | D5 |
| D305 | C11 |
| D306 | C11 |
| D307 | C11 |
| D401 | E7 |
| D402 | E8 |
| D403 | E4 |
| D404 | E5 |
| D405 | D11 |
| D406 | E11 |
| D407 | E12 |
| D501 | F7 |
| D502 | F8 |
| D503 | F4 |
| D504 | F5 |
| D505 | E11 |
| D506 | F11 |
| D507 | F11 |
| D601 | G7 |
| D602 | G8 |
| D603 | G4 |
| D604 | G5 |
| D605 | F11 |
| D606 | G11 |
| D607 | G12 |
| D701 | H7 |
| D702 | H8 |
| D703 | H4 |
| D704 | H5 |
| D705 | G11 |
| D706 | H11 |
| D707 | H11 |
| D801 | I7 |
| D802 | I8 |
| D803 | I4 |
| D804 | I5 |
| D805 | I11 |
| D806 | I11 |
| D807 | I12 |
| D901 | M8 |
| D902 | L9 |
| D903 | M11 |
| D904 | L11 |
| D905 | L11 |
| D906 | M12 |
| D907 | N12 |
| D908 | M12 |
| E1 | N4 |
| E2 | N15 |
| E3 | N9 |
| E101 | A5 |
| E301 | C5 |
| E501 | E5 |
| E701 | G5 |
| E901 | M7 |
| E902 | L13 |
| E903 | H16 |
| E904 | K3 |
| E905 | J12 |
| IC1 | P2 |
| IC2 | O8 |
| IC3 | O7 |
| IC4 | P5 |
| IC5 | P5 |
| IC6 | N6 |
| IC7 | O8 |
| IC8 | O8 |
| IC9 | P8 |
| IC10 | Q5 |
| IC11 | O12 |
| IC12 | O15 |
| IC13 | O15 |
| IC14 | O14 |
| IC15 | Q14 |
| IC16 | Q12 |
| IC17 | Q13 |
| IC18 | Q14 |
| IC19 | K14 |
| IC20 | M14 |
| IC21 | O3 |
| IC22 | M4 |
| IC23 | Q11 |
| IC24 | P10 |
| IC25 | O16 |
| IC101 | A5 |
| IC102 | A7 |
| IC103 | A7 |
| IC104 | A2 |
| IC105 | A3 |
| IC106 | A4 |
| IC107 | A9 |
| IC108 | A10 |
| IC109 | A13 |
| IC110 | A13 |
| IC111 | A8 |
| IC112 | A15 |
| IC113 | A15 |
| IC114 | C9 |
| IC115 | A12 |
| IC116 | B14 |
| IC117 | A14 |
| IC118 | J10 |
| IC119 | I10 |
| IC201 | B5 |
| IC202 | B7 |
| IC203 | B7 |
| IC204 | B2 |
| IC205 | B3 |
| IC206 | B4 |
| IC207 | B10 |
| IC208 | B11 |
| IC209 | B12 |
| IC210 | B13 |
| IC211 | B8 |
| IC212 | B15 |
| IC213 | B15 |
| IC301 | C5 |
| IC302 | C7 |
| IC303 | C7 |
| IC304 | C2 |
| IC305 | C3 |
| IC306 | C4 |
| IC307 | C9 |
| IC308 | C10 |
| IC309 | C13 |
| IC310 | C13 |
| IC311 | C8 |
| IC312 | C15 |
| IC313 | C15 |
| IC314 | E9 |
| IC315 | C12 |
| IC316 | D14 |
| IC317 | C14 |
| IC401 | E5 |
| IC402 | D7 |
| IC403 | D7 |
| IC404 | E2 |
| IC405 | E3 |
| IC406 | D4 |
| IC407 | D10 |
| IC408 | E11 |
| IC409 | D12 |
| IC410 | D13 |
| IC411 | E8 |
| IC412 | E15 |
| IC413 | D15 |
| IC501 | F5 |
| IC502 | E7 |
| IC503 | E7 |
| IC504 | F2 |
| IC505 | F3 |
| IC506 | E4 |
| IC507 | E9 |
| IC508 | F10 |
| IC509 | E13 |
| IC510 | E13 |
| IC511 | F8 |
| IC512 | F15 |
| IC513 | E15 |
| IC514 | G9 |
| IC515 | E12 |
| IC516 | F14 |
| IC517 | E14 |
| IC601 | G5 |
| IC602 | F7 |
| IC603 | F7 |
| IC604 | G2 |
| IC605 | G3 |
| IC606 | F4 |
| IC607 | F10 |
| IC608 | G11 |
| IC609 | F12 |
| IC610 | F13 |
| IC611 | G8 |
| IC612 | G15 |
| IC613 | F15 |
| IC701 | H5 |
| IC702 | G7 |
| IC703 | G7 |
| IC704 | H2 |
| IC705 | H3 |
| IC706 | G4 |
| IC707 | G9 |
| IC708 | H10 |
| IC709 | G13 |
| IC710 | G13 |
| IC711 | H8 |
| IC712 | H15 |
| IC713 | G15 |
| IC714 | I9 |
| IC715 | G12 |
| IC716 | H14 |
| IC717 | G14 |
| IC801 | I5 |
| IC802 | I7 |
| IC803 | I7 |
| IC804 | I2 |
| IC805 | I3 |
| IC806 | H4 |
| IC807 | I10 |
| IC808 | I11 |
| IC809 | H12 |
| IC810 | H13 |
| IC811 | J8 |
| IC812 | I15 |
| IC813 | I15 |
| IC901 | L13 |
| IC902 | K13 |
| IC903 | K11 |
| IC904 | K11 |
| IC905 | O11 |
| IC906 | J10 |
| IC907 | J11 |
| IC908 | M8 |
| IC909 | M8 |
| IC910 | O10 |
| IC911 | N9 |
| IC912 | L9 |
| IC913 | L10 |
| IC914 | K8 |
| IC915 | K8 |
| IC916 | J7 |
| IC917 | K5 |
| IC918 | K6 |
| IC919 | M11 |
| IC920 | M12 |
| IC921 | K3 |
| IC922 | K3 |
| IC924 | P15 |
| IC925 | M6 |
| IC926 | L6 |
| IC927 | P4 |
| IC928 | Q3 |
| IC929 | P3 |
| IC930 | Q4 |
| IC931 | Q4 |
| IC932 | P4 |
| IC933 | O4 |
| IC934 | O4 |
| IC935 | M2 |
| IC936 | O12 |
| IC937 | K2 |
| IC938 | J2 |
| IC939 | K2 |
| IC940 | J2 |
| IC941 | N13 |
| IC943 | K10 |
| IC944 | M10 |
| IC945 | J4 |
| IC946 | L9 |
| IC947 | K9 |
| IC948 | K10 |
| IC949 | J12 |
| LPF901 | K13 |
| LPF902 | K7 |
| Q1 | N16 |
| Q2 | N10 |
| Q4 | K5 |
| Q901 | M8 |
| Q902 | M9 |
| Q903 | M11 |
| Q904 | J6 |
| Q905 | L5 |
| Q906 | K6 |
| Q907 | K4 |
| Q908 | M4 |
| RB1 | P8 |
| RB2 | P7 |
| RB3 | M14 |
| RB4 | M15 |
| RB101 | B14 |
| RB201 | B13 |
| RB301 | E14 |
| RB401 | D13 |
| RB501 | G14 |
| RB601 | F13 |
| RB701 | I14 |
| RB801 | I13 |
| RV101 | A6 |
| RV102 | A2 |
| RV201 | B6 |
| RV202 | B2 |
| RV301 | C6 |
| RV302 | C2 |
| RV401 | D6 |
| RV402 | D2 |
| RV501 | E6 |
| RV502 | E2 |
| RV601 | F6 |
| RV602 | F2 |
| RV701 | G6 |
| RV702 | G2 |
| RV801 | H6 |
| RV802 | H2 |
| RV901 | K6 |
| RV902 | L8 |
| S1 | Q6 |
| TP1 | N14 |
| TP2 | N14 |
| TP3 | N13 |
| TP4 | N13 |
| TP5 | N13 |
| TP6 | M13 |
| TP7 | M13 |
| TP8 | M13 |
| TP101 | A12 |
| TP102 | A10 |
| TP103 | A13 |
| TP104 | A7 |
| TP105 | A4 |
| TP201 | B12 |
| TP202 | B10 |
| TP203 | A14 |
| TP204 | B7 |
| TP205 | B4 |
| TP301 | D12 |
| TP302 | C10 |
| TP303 | C14 |
| TP304 | D7 |
| TP305 | D4 |
| TP401 | E12 |
| TP402 | E10 |
| TP403 | B14 |
| TP404 | E7 |
| TP405 | E4 |
| TP501 | F12 |
| TP502 | F10 |
| TP503 | E14 |
| TP504 | F7 |
| TP505 | F4 |
| TP601 | G12 |
| TP602 | G10 |
| TP603 | E14 |
| TP604 | G7 |
| TP605 | G4 |
| TP701 | H12 |
| TP702 | H10 |
| TP703 | G14 |
| TP704 | H7 |
| TP705 | H4 |
| TP801 | I12 |
| TP802 | I10 |
| TP803 | G14 |
| TP804 | I7 |
| TP805 | I4 |
| TP901 | K12 |
| TP902 | J7 |
| X1 | P5 |

## AU-109 BOARD WAVEFORMS

PLAYER MODE : PLAY
OSCILLOSCOPE : TEKTRONIX 2465
VERTICAL : indicated on the photo itself
HORIZONTAL : indicated on the photo itself
FREQUENCY RESPONSE : 300 MHz or 20 MHz

①
1/8 TP104
1/8 TP101

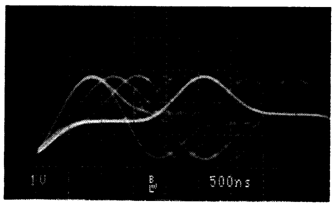

②
1/8 TP102

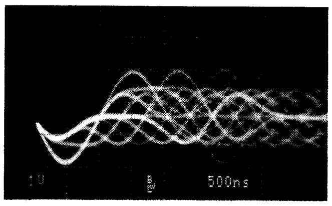

③
1/8 TP103

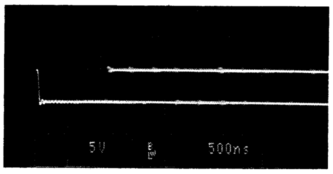

④
5/8 TP901

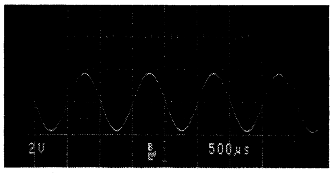

⑤
5/8 IC911-6

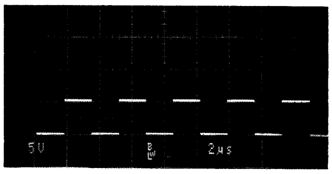

⑥
5/8 IC944-9

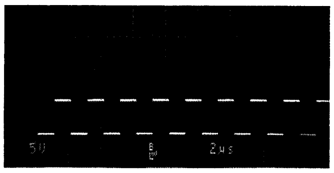

⑦
5/8 TP902

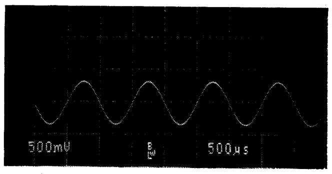

⑧
5/8 CN302-12B

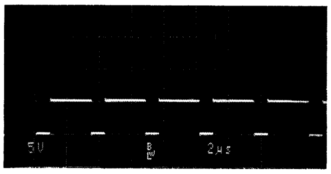

⑨
5/8 CN302-11B

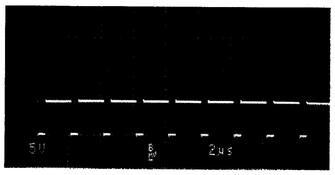

⑩
6/8 CN301-23B

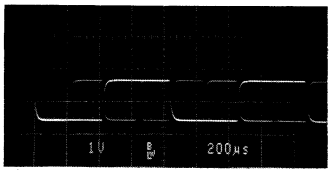

⑪
8/8 IC23-18

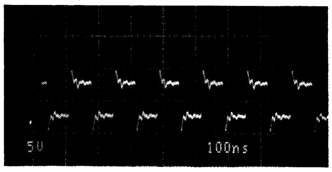

⑫
8/8 CN302-19C

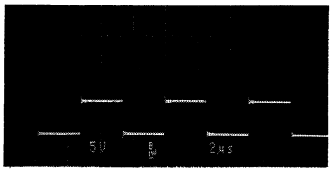

## AU-109 BOARD (1/8)

Audio TR1 – TR4 PB Eq and Zero Cross Det

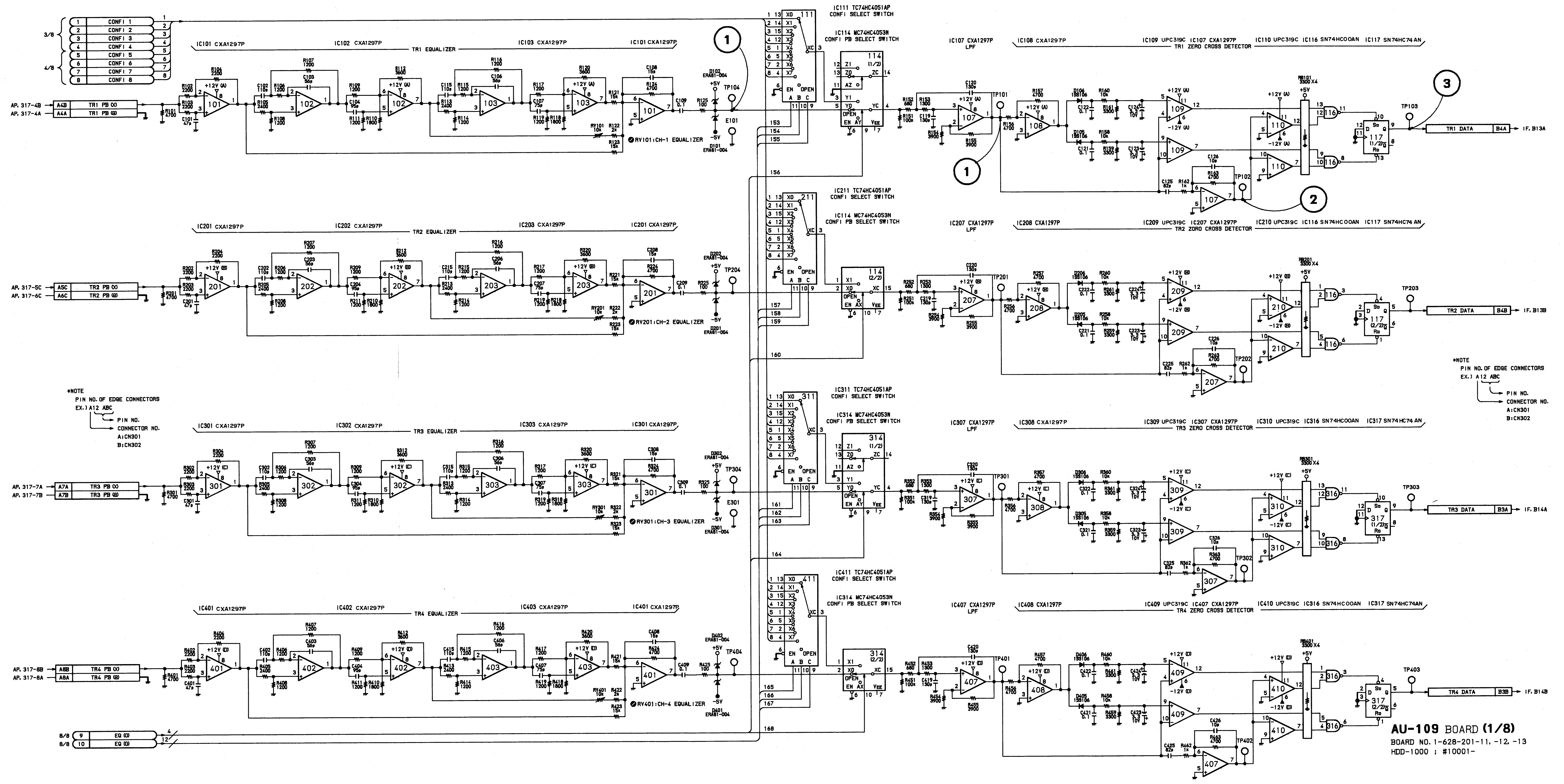
CONFI 1
CONFI 2
CONFI 3
CONFI 4
CONFI 5
CONFI 6
CONFI 7
CONFI 8
3/8
4/8
AP, 317-4B
AP, 317-4A
TR1 PB (+)
TR1 PB (-)
AP, 317-5C
AP, 317-6C
TR2 PB (+)
TR2 PB (-)
AP, 317-7A
AP, 317-7B
TR3 PB (+)
TR3 PB (-)
AP, 317-8B
AP, 317-8A
TR4 PB (+)
TR4 PB (-)
8/8
EQ (+)
EQ (-)
IC101 CXA1297P
IC102 CXA1297P
IC103 CXA1297P
TR1 EQUALIZER
IC201 CXA1297P
IC202 CXA1297P
IC203 CXA1297P
TR2 EQUALIZER
IC301 CXA1297P
IC302 CXA1297P
IC303 CXA1297P
TR3 EQUALIZER
IC401 CXA1297P
IC402 CXA1297P
IC403 CXA1297P
TR4 EQUALIZER
RV101:CH-1 EQUALIZER
RV201:CH-2 EQUALIZER
RV301:CH-3 EQUALIZER
RV401:CH-4 EQUALIZER
TP104
TP204
TP304
TP404
E101
E301
IC111 TC74HC4051AP CONFI SELECT SWITCH
IC114 MC74HC4053N CONFI PB SELECT SWITCH
IC211 TC74HC4051AP CONFI SELECT SWITCH
IC311 TC74HC4051AP CONFI SELECT SWITCH
IC314 MC74HC4053N CONFI PB SELECT SWITCH
IC411 TC74HC4051AP CONFI SELECT SWITCH
IC107 CXA1297P LPF
IC108 CXA1297P
IC109 UPC319C IC107 CXA1297P TR1 ZERO CROSS DETECTOR
IC110 UPC319C IC116 SN74HC00AN IC117 SN74HC74AN
IC207 CXA1297P LPF
IC208 CXA1297P
IC209 UPC319C IC207 CXA1297P TR2 ZERO CROSS DETECTOR
IC210 UPC319C IC116 SN74HC00AN IC117 SN74HC74AN
IC307 CXA1297P LPF
IC308 CXA1297P
IC309 UPC319C IC307 CXA1297P TR3 ZERO CROSS DETECTOR
IC310 UPC319C IC316 SN74HC00AN IC317 SN74HC74AN
IC407 CXA1297P LPF
IC408 CXA1297P
IC409 UPC319C IC407 CXA1297P TR4 ZERO CROSS DETECTOR
IC410 UPC319C IC316 SN74HC00AN IC317 SN74HC74AN
TP101
TP102
TP103
TP201
TP202
TP203
TP301
TP302
TP303
TP401
TP402
TP403
TR1 DATA
TR2 DATA
TR3 DATA
TR4 DATA
IF, B13A
IF, B13B
IF, B14A
IF, B14B
①
②
③
*NOTE
PIN NO. OF EDGE CONNECTORS
EX.) A12 ABC
PIN NO.
CONNECTOR NO.
A:CN301
B:CN302
AU-109 BOARD (1/8)
BOARD NO. 1-628-201-11, -12, -13
HDD-1000 ; #10001-

## AU-109 BOARD (2/8)

Audio TR5 – TR8 PB Eq and Zero Cross Det

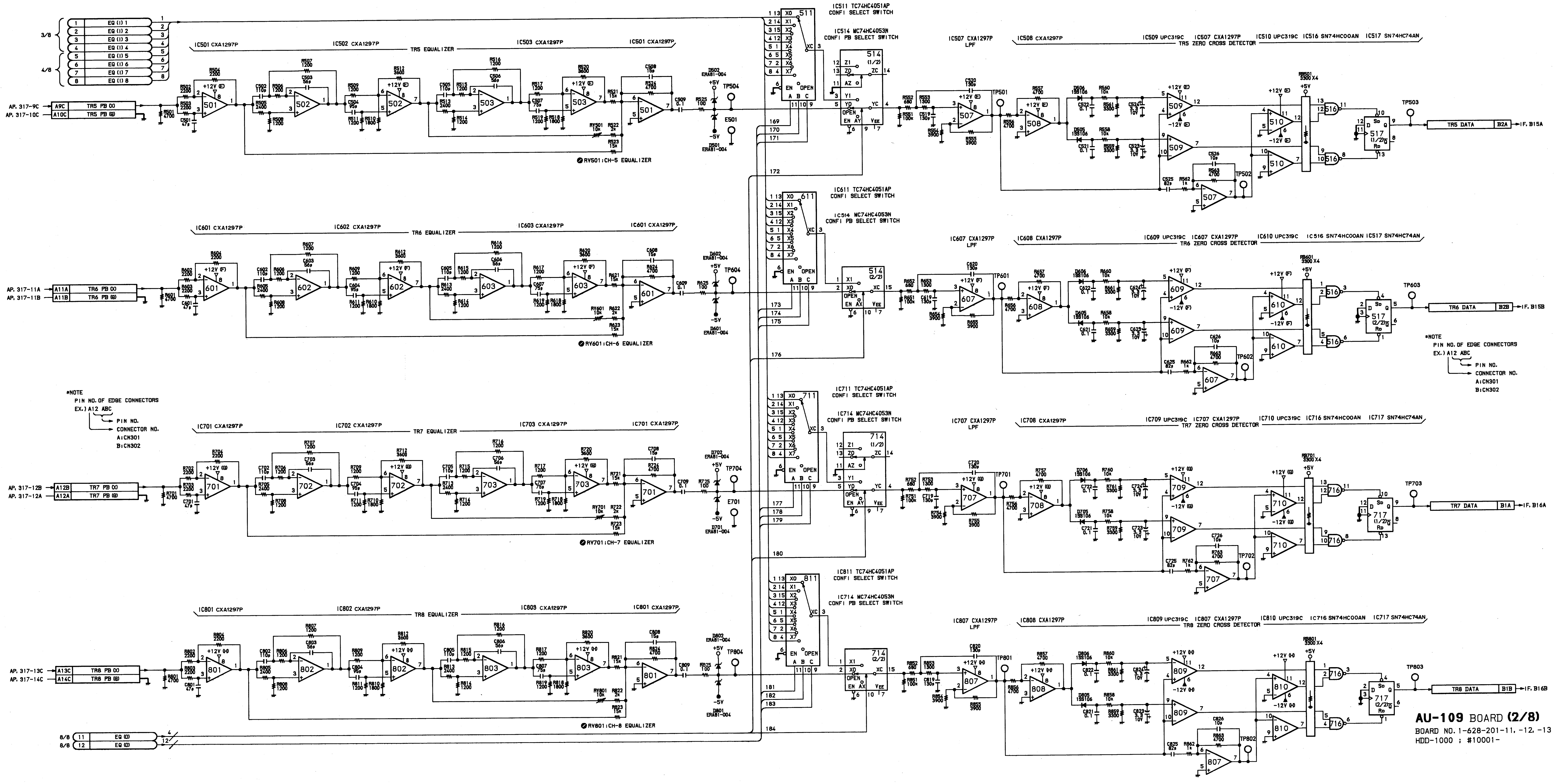
3/8
4/8
EQ (I) 1
EQ (I) 2
EQ (I) 3
EQ (I) 4
EQ (I) 5
EQ (I) 6
EQ (I) 7
EQ (I) 8
AP. 317-9C
AP. 317-10C
A9C TR5 PB (X)
A10C TR5 PB (G)
IC501 CXA1297P
IC502 CXA1297P
TR5 EQUALIZER
IC503 CXA1297P
IC501 CXA1297P
RV501:CH-5 EQUALIZER
TP504
E501
IC511 TC74HC4051AP
CONFI SELECT SWITCH
IC514 MC74HC4053N
CONFI PB SELECT SWITCH
IC507 CXA1297P
LPF
IC508 CXA1297P
IC509 UPC319C
IC507 CXA1297P
TR5 ZERO CROSS DETECTOR
IC510 UPC319C
IC516 SN74HC00AN
IC517 SN74HC74AN
TP501
TP502
TP503
TR5 DATA B2A
IF. B15A
AP. 317-11A
AP. 317-11B
A11A TR6 PB (X)
A11B TR6 PB (G)
IC601 CXA1297P
IC602 CXA1297P
TR6 EQUALIZER
IC603 CXA1297P
IC601 CXA1297P
RV601:CH-6 EQUALIZER
TP604
IC611 TC74HC4051AP
CONFI SELECT SWITCH
IC514 MC74HC4053N
CONFI PB SELECT SWITCH
IC607 CXA1297P
LPF
IC608 CXA1297P
IC609 UPC319C
IC607 CXA1297P
TR6 ZERO CROSS DETECTOR
IC610 UPC319C
IC516 SN74HC00AN
IC517 SN74HC74AN
TP601
TP602
TP603
TR6 DATA B2B
IF. B15B
*NOTE
PIN NO. OF EDGE CONNECTORS
EX.) A12 ABC
PIN NO.
CONNECTOR NO.
A:CN301
B:CN302
AP. 317-12B
AP. 317-12A
A12B TR7 PB (X)
A12A TR7 PB (G)
IC701 CXA1297P
IC702 CXA1297P
TR7 EQUALIZER
IC703 CXA1297P
IC701 CXA1297P
RV701:CH-7 EQUALIZER
TP704
E701
IC711 TC74HC4051AP
CONFI SELECT SWITCH
IC714 MC74HC4053N
CONFI PB SELECT SWITCH
IC707 CXA1297P
LPF
IC708 CXA1297P
IC709 UPC319C
IC707 CXA1297P
TR7 ZERO CROSS DETECTOR
IC710 UPC319C
IC716 SN74HC00AN
IC717 SN74HC74AN
TP701
TP702
TP703
TR7 DATA B1A
IF. B16A
AP. 317-13C
AP. 317-14C
A13C TR8 PB (X)
A14C TR8 PB (G)
IC801 CXA1297P
IC802 CXA1297P
TR8 EQUALIZER
IC803 CXA1297P
IC801 CXA1297P
RV801:CH-8 EQUALIZER
TP804
IC811 TC74HC4051AP
CONFI SELECT SWITCH
IC714 MC74HC4053N
CONFI PB SELECT SWITCH
IC807 CXA1297P
LPF
IC808 CXA1297P
IC809 UPC319C
IC807 CXA1297P
TR8 ZERO CROSS DETECTOR
IC810 UPC319C
IC716 SN74HC00AN
IC717 SN74HC74AN
TP801
TP802
TP803
TR8 DATA B1B
IF. B16B
8/8 11 EQ (X)
8/8 12 EQ (G)

**AU-109** BOARD **(2/8)**

BOARD NO. 1-628-201-11, -12, -13
HDD-1000 ; #10001-

## AU-109 BOARD (3/8)

Audio TR1 – TR4 Confi Eq

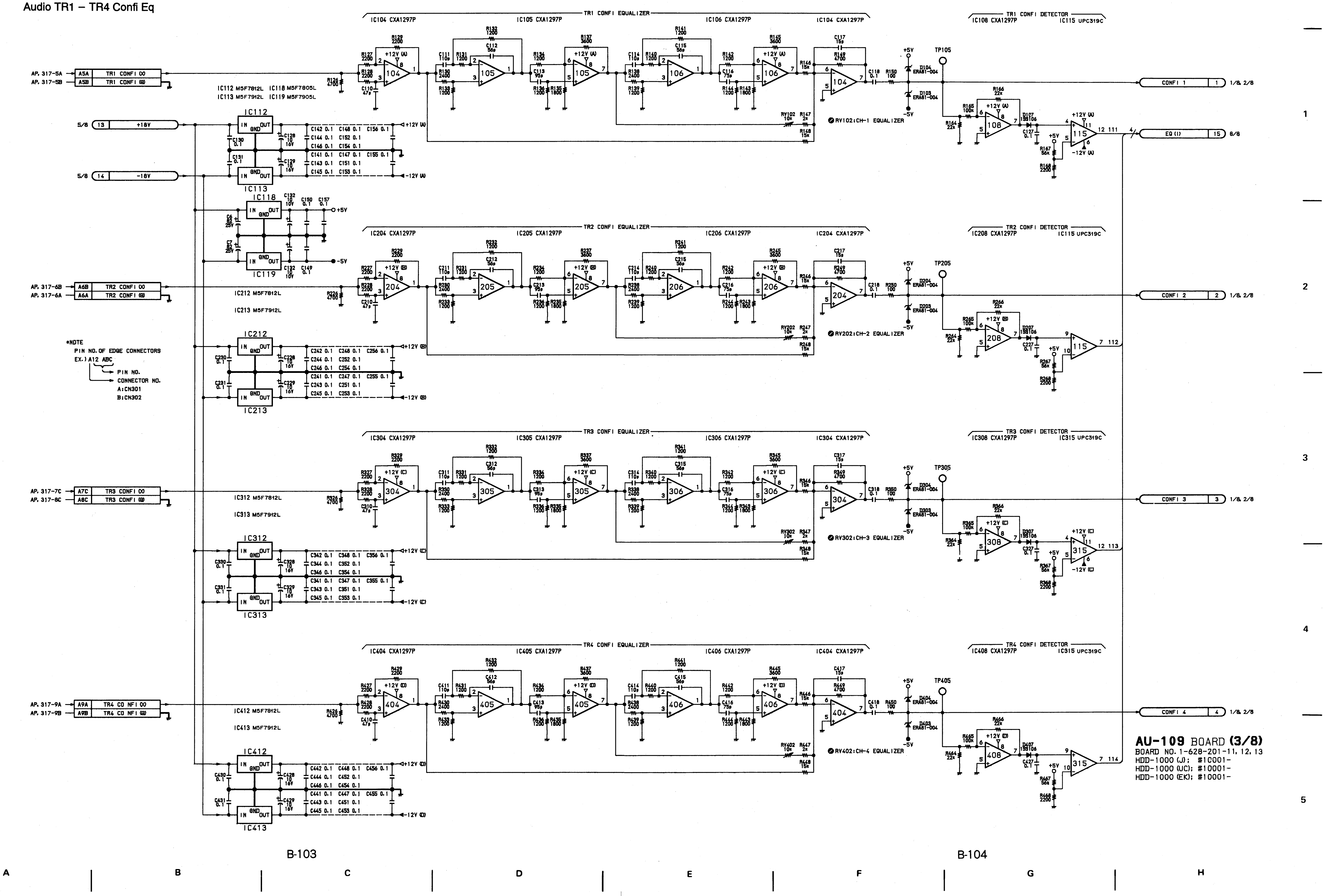
TR1 CONFI EQUALIZER
IC104 CXA1297P
IC105 CXA1297P
IC106 CXA1297P
TR1 CONFI DETECTOR
IC108 CXA1297P
IC115 UPC319C
AP. 317-5A
AP. 317-5B
A5A TR1 CONFI (X)
A5B TR1 CONFI (G)
IC112 M5F7812L
IC113 M5F7912L
IC118 M5F7805L
IC119 M5F7905L
5/8 13 +18V
5/8 14 -18V
+12V (A)
-12V (A)
+5V
-5V
TP105
D104 ERA81-004
D103 ERA81-004
D107 1SS106
RV102:CH-1 EQUALIZER
CONFI 1
1/8, 2/8
EQ (1)
15 8/8
TR2 CONFI EQUALIZER
IC204 CXA1297P
IC205 CXA1297P
IC206 CXA1297P
TR2 CONFI DETECTOR
IC208 CXA1297P
AP. 317-6B
AP. 317-6A
A6B TR2 CONFI (X)
A6A TR2 CONFI (G)
IC212 M5F7812L
IC213 M5F7912L
TP205
RV202:CH-2 EQUALIZER
CONFI 2
+12V (B)
-12V (B)
*NOTE
PIN NO. OF EDGE CONNECTORS
EX.) A12 ABC
PIN NO.
CONNECTOR NO.
A:CN301
B:CN302
TR3 CONFI EQUALIZER
IC304 CXA1297P
IC305 CXA1297P
IC306 CXA1297P
TR3 CONFI DETECTOR
IC308 CXA1297P
IC315 UPC319C
AP. 317-7C
AP. 317-8C
A7C TR3 CONFI (X)
A8C TR3 CONFI (G)
IC312 M5F7812L
IC313 M5F7912L
TP305
RV302:CH-3 EQUALIZER
CONFI 3
+12V (C)
-12V (C)
TR4 CONFI EQUALIZER
IC404 CXA1297P
IC405 CXA1297P
IC406 CXA1297P
TR4 CONFI DETECTOR
IC408 CXA1297P
AP. 317-9A
AP. 317-9B
A9A TR4 CONFI (X)
A9B TR4 CONFI (G)
IC412 M5F7812L
IC413 M5F7912L
TP405
RV402:CH-4 EQUALIZER
CONFI 4
+12V (D)
-12V (D)
A
B
C
D
E
F
G
H
1
2
3
4
5

**AU-109** BOARD **(3/8)**
BOARD NO. 1-628-201-11, 12, 13
HDD-1000 (J); #10001-
HDD-1000 (UC); #10001-
HDD-1000 (EK); #10001-

## AU-109 BOARD (4/8)

Audio TR5 – TR8 Confi Eq

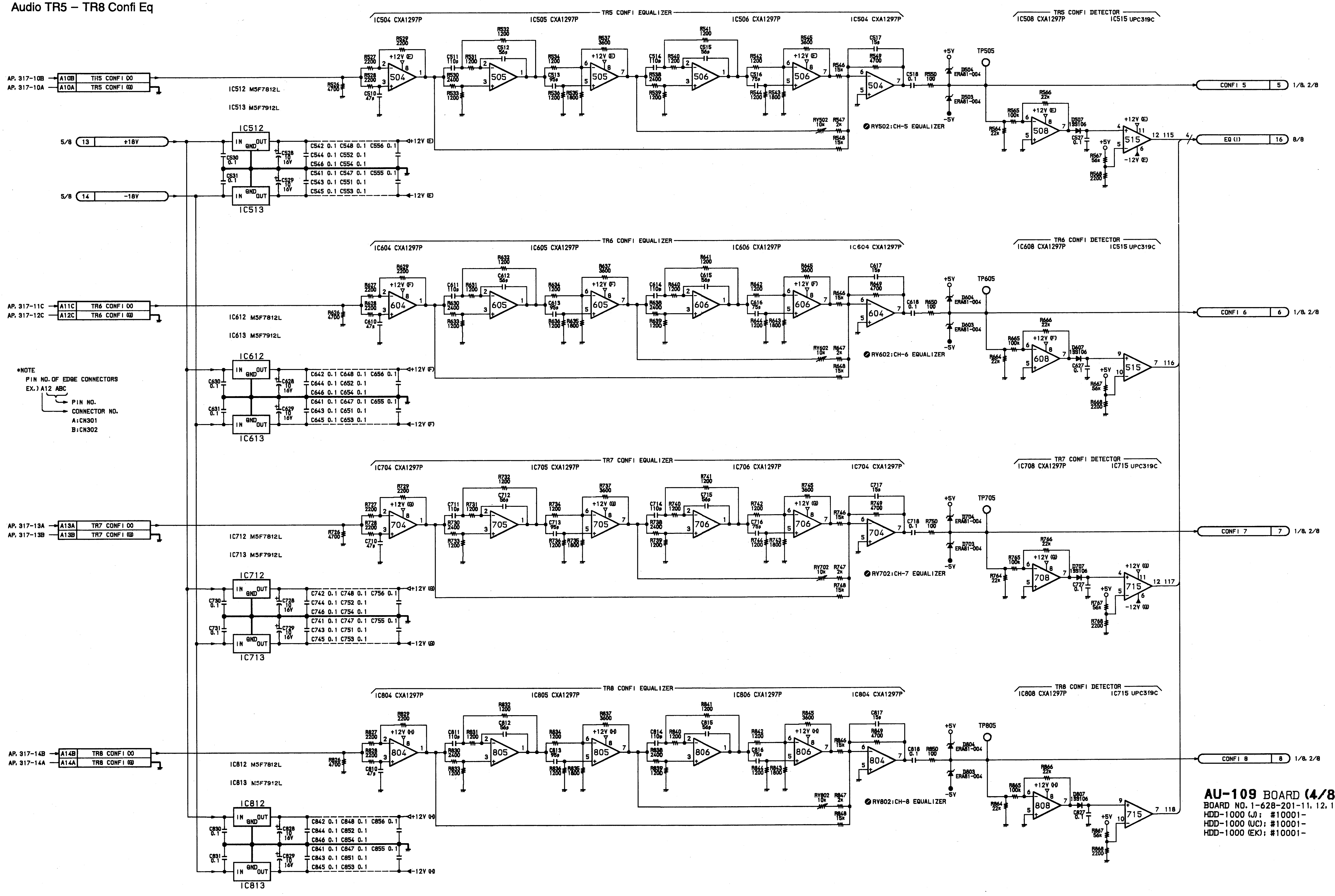
TR5 CONFI EQUALIZER
IC504 CXA1297P
IC505 CXA1297P
IC506 CXA1297P
TR5 CONFI DETECTOR
IC508 CXA1297P
IC515 UPC319C
AP, 317-10B
AP, 317-10A
TR5 CONFI (X)
TR5 CONFI (G)
IC512 M5F7812L
IC513 M5F7912L
5/8 13 +18V
5/8 14 -18V
TP505
RV502:CH-5 EQUALIZER
CONFI 5
1/8, 2/8
EQ (1)
8/8
TR6 CONFI EQUALIZER
IC604 CXA1297P
IC605 CXA1297P
IC606 CXA1297P
TR6 CONFI DETECTOR
IC608 CXA1297P
AP, 317-11C
AP, 317-12C
TR6 CONFI (X)
TR6 CONFI (G)
IC612 M5F7812L
IC613 M5F7912L
TP605
RV602:CH-6 EQUALIZER
CONFI 6
*NOTE
PIN NO. OF EDGE CONNECTORS
EX.) A12 ABC
PIN NO.
CONNECTOR NO.
A:CN301
B:CN302
TR7 CONFI EQUALIZER
IC704 CXA1297P
IC705 CXA1297P
IC706 CXA1297P
TR7 CONFI DETECTOR
IC708 CXA1297P
IC715 UPC319C
AP, 317-13A
AP, 317-13B
TR7 CONFI (X)
TR7 CONFI (G)
IC712 M5F7812L
IC713 M5F7912L
TP705
RV702:CH-7 EQUALIZER
CONFI 7
TR8 CONFI EQUALIZER
IC804 CXA1297P
IC805 CXA1297P
IC806 CXA1297P
TR8 CONFI DETECTOR
IC808 CXA1297P
AP, 317-14B
AP, 317-14A
TR8 CONFI (X)
TR8 CONFI (G)
IC812 M5F7812L
IC813 M5F7912L
TP805
RV802:CH-8 EQUALIZER
CONFI 8

**AU-109** BOARD **(4/8)**
BOARD NO. 1-628-201-11, 12, 13
HDD-1000 (J); #10001-
HDD-1000 (UC); #10001-
HDD-1000 (EK); #10001-

## AU-109 BOARD (5/8)

S/N up to 10199

Cue Mod/Demod

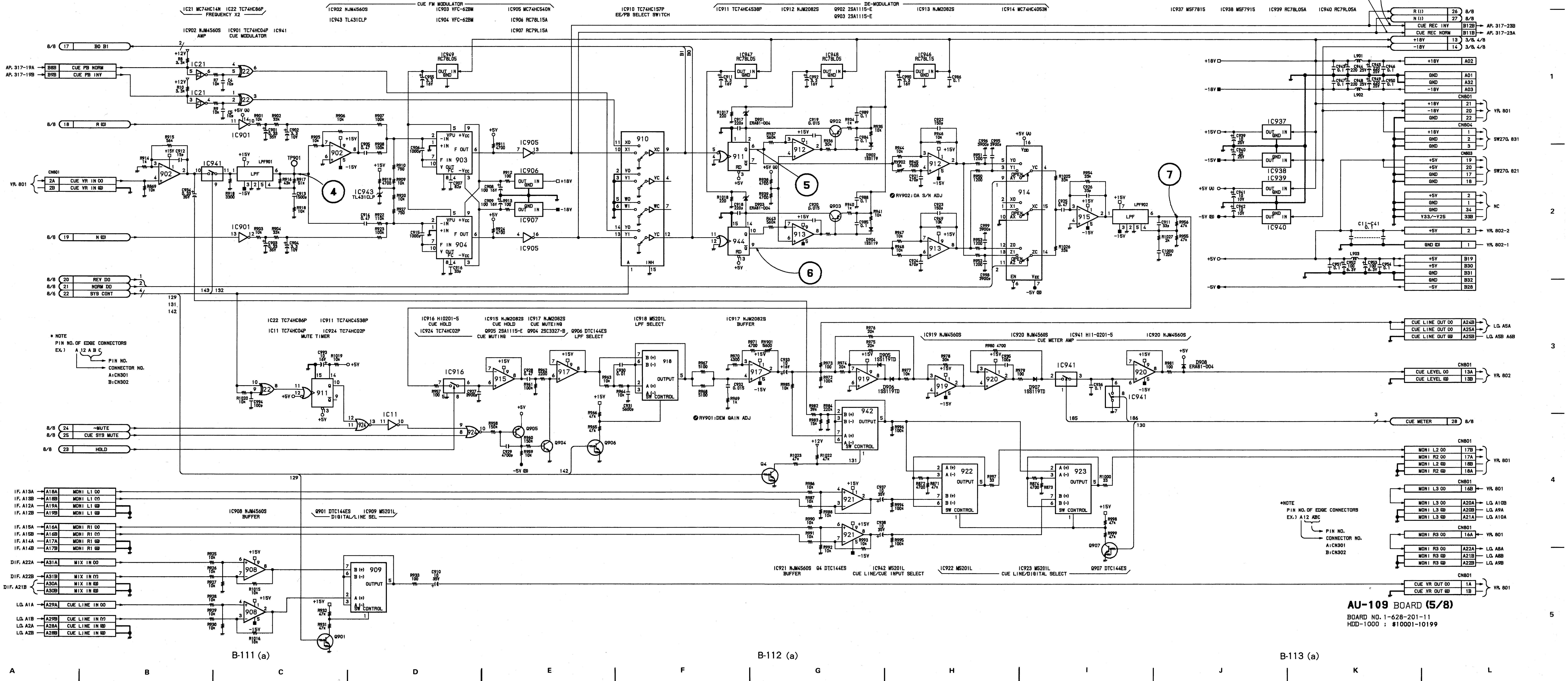
IC21 MC74HC14N IC22 TC74HC86P
FREQUENCY X2
IC902 NJM4560S AMP
IC901 TC74HC04P IC941 CUE MODULATOR
CUE FM MODULATOR
IC902 NJM4560S
IC943 TL431CLP
IC903 VFC-62BM
IC904 VFC-62BM
IC905 MC74HC540N
IC906 RC78L15A
IC907 RC79L15A
IC910 TC74HC157P
EE/PB SELECT SWITCH
DE-MODULATOR
IC911 TC74HC4538P
IC912 NJM2082S
Q902 2SA1115-E
Q903 2SA1115-E
IC913 NJM2082S
IC914 MC74HC4053N
IC937 MSF7815
IC938 MSF7915
IC939 RC78L05A
IC940 RC79L05A
BO B1
CUE PB NORM
CUE PB INV
R (I)
N (I)
CUE VR IN (+)
CUE VR IN (-)
REV DO
NORM DO
SYS CONT
LPF
LPF901
LPF902
TP901
RV902: DA S/N ADJ
RV901: DEM GAIN ADJ
R (I)
N (I)
CUE REC INV
CUE REC NORM
+18V
-18V
AP. 317-23B
AP. 317-23A
3/6, 4/8
GND
-18V
CN801
VR. 801
CN804
SW270, 831
CN803
SW270, 821
NC
Y33/-Y25
VR. 802-2
VR. 802-1
IC937
IC938
IC939
IC940
* NOTE
PIN NO. OF EDGE CONNECTORS
EX.) A12 ABC
PIN NO.
CONNECTOR NO.
A:CN301
B:CN302
IC22 TC74HC86P
IC911 TC74HC4538P
IC11 TC74HC04P
IC924 TC74HC02P
MUTE TIMER
IC916 HI0201-5
CUE HOLD
IC924 TC74HC02P
IC915 NJM2082S
CUE HOLD
CUE MUTEING
IC917 NJM2082S
CUE MUTEING
Q905 2SA1115-E
Q904 2SC3327-B
Q906 DTC144ES
LPF SELECT
IC918 M5201L
LPF SELECT
IC917 NJM2082S
BUFFER
IC919 NJM4560S
IC920 NJM4560S
IC941 HI1-0201-5
IC920 NJM4560S
CUE METER AMP
-MUTE
CUE SYS MUTE
HOLD
CUE LINE OUT (+)
CUE LINE OUT (-)
CUE LINE OUT (G)
LG. A5A
LG. A5B A6B
CUE LEVEL (+)
CUE LEVEL (G)
VR. 802
CUE METER
MONI L2 (+)
MONI L2 (-)
MONI L2 (G)
MONI L3 (G)
MONI L3 (+)
LG. A10B
LG. A9A
LG. A10A
MONI R3 (G)
LG. A8A
LG. A8B
LG. A9B
CUE VR OUT (+)
CUE VR OUT (G)
MONI L1 (+)
MONI L1 (-)
MONI L1 (G)
MONI R1 (+)
MONI R1 (-)
MONI R1 (G)
MIX IN (+)
MIX IN (-)
MIX IN (G)
CUE LINE IN (+)
CUE LINE IN (-)
CUE LINE IN (G)
IF. A13A
IF. A13B
IF. A12A
IF. A12B
IF. A15A
IF. A15B
IF. A14A
IF. A14B
DIF. A22A
DIF. A22B
DIF. A21B
LG. A1A
LG. A1B
LG. A2A
LG. A2B
IC908 NJM4560S
BUFFER
Q901 DTC144ES
IC909 M5201L
DIGITAL/LINE SEL
IC921 NJM4560S
BUFFER
Q4 DTC144ES
IC942 M5201L
CUE LINE/CUE INPUT SELECT
IC922 M5201L
IC923 M5201L
CUE LINE/DIGITAL SELECT
Q907 DTC144ES
SW CONTROL
OUTPUT
④
⑤
⑥
⑦
⑧
⑨
B-111 (a)
B-112 (a)
B-113 (a)
A
B
C
D
E
F
G
H
I
J
K
L
1
2
3
4
5

**AU-109** BOARD **(5/8)**
BOARD NO. 1-628-201-11
HDD-1000 ; #10001-10199

## AU-109 BOARD (5/8)

S/N 10201 and higher

Cue Mod/Demod

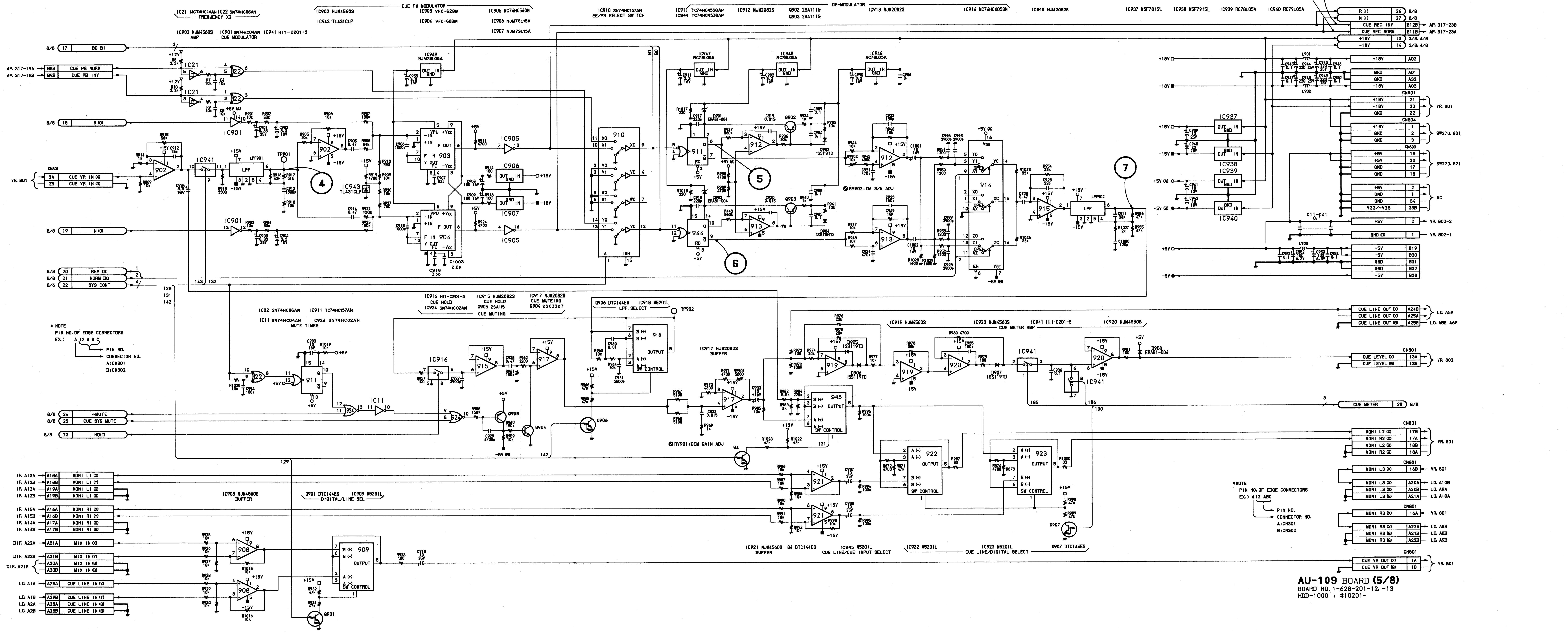
IC21 MC74HC14AN IC22 SN74HC86AN FREQUENCY X2
IC902 NJM4560S AMP
IC901 SN74HC04AN CUE MODULATOR
IC941 H11-0201-5
CUE FM MODULATOR
IC902 NJM4560S
IC943 TL431CLP
IC903 VFC-628M
IC904 VFC-628M
IC905 MC74HC540N
IC906 NJM78L15A
IC907 NJM79L15A
IC910 SN74HC157AN EE/PB SELECT SWITCH
DE-MODULATOR
IC911 TC74HC4538AP
IC944 TC74HC4538AP
IC912 NJM2082S
Q902 2SA1115
Q903 2SA1115
IC913 NJM2082S
IC914 MC74HC4053N
IC915 NJM2082S
IC937 M5F7815L
IC938 M5F7915L
IC939 RC78L05A
IC940 RC79L05A
8/8 17 B0 B1
AP. 317-19A B8B CUE PB NORM
AP. 317-19B B9B CUE PB INV
8/8 18 R (I)
YR. 801 CN801 2A CUE YR IN (I) 2B CUE YR IN (G)
8/8 19 N (I)
8/8 20 REV (O)
8/8 21 NORM (O)
8/6 22 SYS CONT
LPF901
TP901
IC949 NJM78L05A
IC947 RC78L05A
IC948 RC78L05A
IC946 RC78L05A
RV902: DA S/N ADJ
LPF902
R (I) 26 8/8
N (I) 27 8/8
CUE REC INV B12B AP. 317-23B
CUE REC NORM B11B AP. 317-23A
+18V 13 3/8, 4/8
-18V 14 3/8, 4/8
+18V A02
GND A01
GND A32
-18V A03
CN801 +18V 21 -18V 20 GND 22 YR. 801
CN804 +18V 1 GND 2 GND 3 SW270, 831
CN803 +5V 19 +5V 20 GND 17 GND 18 SW270, 821
+5V 2 GND 1 GND 34 Y33/~Y25 33B NC
+5V 2 YR. 802-2
GND (D) 1 YR. 802-1
+5V B19 +5V B30 GND B31 GND B32 -5V B28
IC937 IC938 IC939 IC940
* NOTE
PIN NO. OF EDGE CONNECTORS
EX.) A 12 A B C
PIN NO.
CONNECTOR NO.
A:CN301
B:CN302
IC22 SN74HC86AN
IC911 TC74HC157AN
IC11 SN74HC04AN
IC924 SN74HC02AN
MUTE TIMER
IC916 H11-0201-5 CUE HOLD
IC924 SN74HC02AN
IC915 NJM2082S CUE HOLD
Q905 2SA115
IC917 NJM2082S CUE MUTEING
Q904 2SC3327
CUE MUTING
Q906 DTC144ES
IC918 M5201L
LPF SELECT
TP902
IC917 NJM2082S BUFFER
RV901: DEM GAIN ADJ
8/8 24 ~MUTE
8/8 25 CUE SYS MUTE
8/8 23 HOLD
IC919 NJM4560S
IC920 NJM4560S
IC941 H11-0201-5
IC920 NJM4560S
CUE METER AMP
CUE LINE OUT (O) A24B
CUE LINE OUT (O) A25A
CUE LINE OUT (G) A25B
LG. A5A
LG. A5B A6B
CN801 CUE LEVEL (O) 13A CUE LEVEL (G) 13B YR. 802
CUE METER 28 8/8
CN801 MONI L2 (O) 17B MONI R2 (O) 17A MONI L2 (G) 18B MONI R2 (G) 18A YR. 801
CN801 MONI L3 (O) 16B YR. 801
MONI L3 (O) A20A MONI L3 (G) A20B MONI L3 (G) A21A LG. A10B LG. A9A LG. A10A
CN801 MONI R3 (O) 16A YR. 801
MONI R3 (O) A22A MONI R3 (G) A21B MONI R3 (G) A22B LG. A8A LG. A8B LG. A9B
CN801 CUE YR OUT (O) 1A CUE YR OUT (G) 1B YR. 801
IF. A13A A18A MONI L1 (O)
IF. A13B A18B MONI L1 (Y)
IF. A12A A19A MONI L1 (G)
IF. A12B A19B MONI L1 (G)
IF. A15A A16A MONI R1 (O)
IF. A15B A16B MONI R1 (Y)
IF. A14A A17A MONI R1 (G)
IF. A14B A17B MONI R1 (G)
DIF. A22A A31A MIX IN (O)
DIF. A22B A31B MIX IN (Y)
DIF. A21B A30A MIX IN (G) A30B MIX IN (G)
LG. A1A A29A CUE LINE IN (O)
LG. A1B A29B CUE LINE IN (Y)
LG. A2A A28A CUE LINE IN (G)
LG. A2B A28B CUE LINE IN (G)
IC908 NJM4560S BUFFER
Q901 DTC144ES
IC909 M5201L
DIGITAL/LINE SEL
IC921 NJM4560S BUFFER
Q4 DTC144ES
IC945 M5201L CUE LINE/CUE INPUT SELECT
IC922 M5201L
IC923 M5201L CUE LINE/DIGITAL SELECT
Q907 DTC144ES
*NOTE
PIN NO. OF EDGE CONNECTORS
EX.) A12 ABC
PIN NO.
CONNECTOR NO.
A:CN301
B:CN302
④ ⑤ ⑥ ⑦ ⑧ ⑨
1 2 3 4 5

**AU-109** BOARD **(5/8)**
BOARD NO. 1-628-201-12, -13
HDD-1000 ; #10201-

## AU-109 BOARD (6/8)

SV BUS Interface and TC Selector

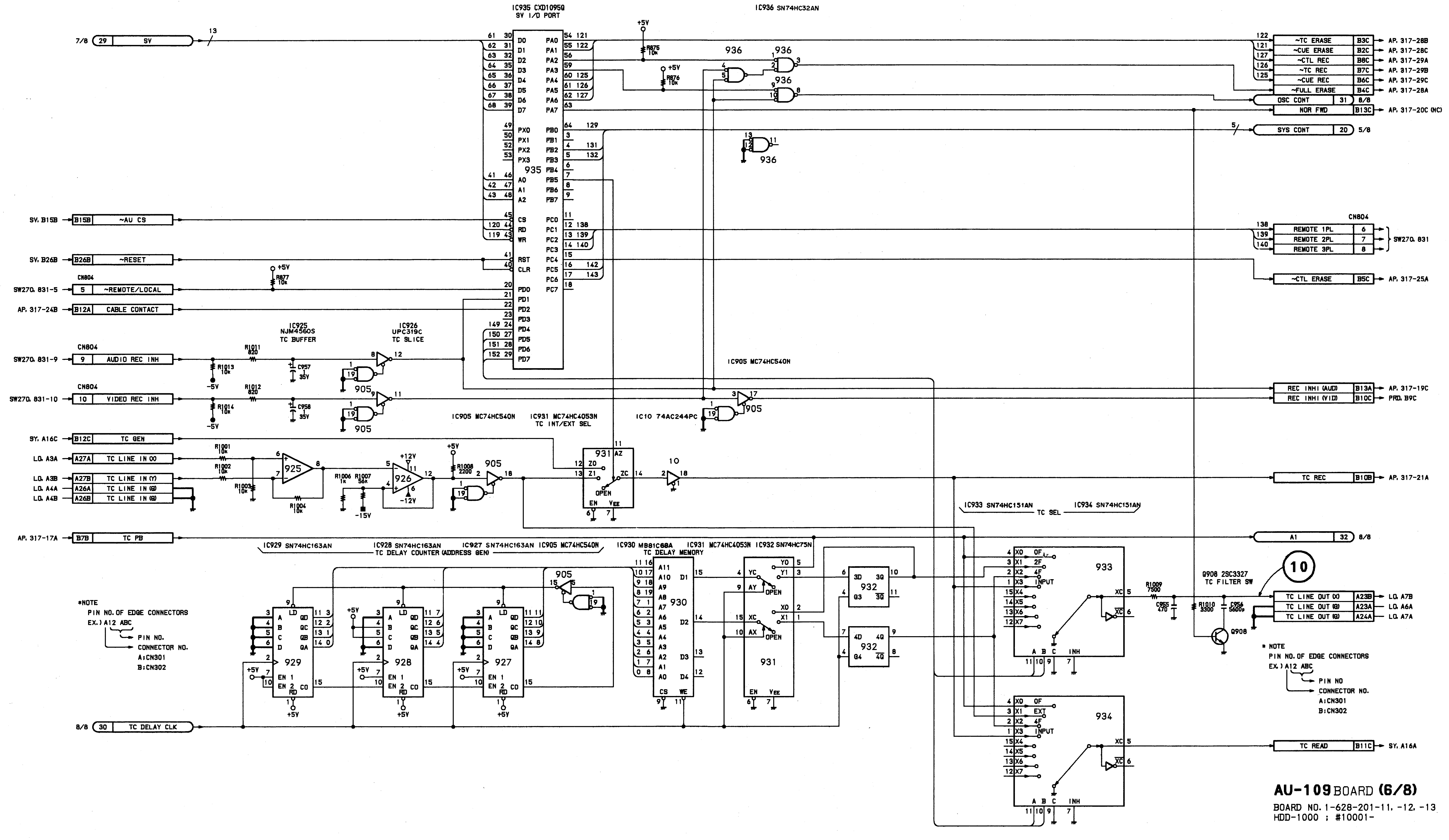
IC935 CXD1095Q
SV I/O PORT
IC936 SN74HC32AN
7/8 29 SV
SV. B15B B15B ~AU CS
SV. B26B B26B ~RESET
SW270. 831-5 5 ~REMOTE/LOCAL
AP. 317-24B B12A CABLE CONTACT
IC925 NJM4560S TC BUFFER
IC926 UPC319C TC SLICE
SW270. 831-9 9 AUDIO REC INH
SW270. 831-10 10 VIDEO REC INH
SY. A16C B12C TC GEN
LO. A3A A27A TC LINE IN (X)
LO. A3B A27B TC LINE IN (Y)
LO. A4A A26A TC LINE IN (G)
LO. A4B A26B TC LINE IN (B)
AP. 317-17A B7B TC PB
8/8 30 TC DELAY CLK
IC905 MC74HC540N
IC931 MC74HC4053N TC INT/EXT SEL
IC10 74AC244PC
IC933 SN74HC151AN
IC934 SN74HC151AN
TC SEL
IC929 SN74HC163AN
IC928 SN74HC163AN
IC927 SN74HC163AN
IC905 MC74HC540N
TC DELAY COUNTER (ADDRESS GEN)
IC930 MB81C68A
IC931 MC74HC4053N
IC932 SN74HC75N
TC DELAY MEMORY
Q908 2SC3327 TC FILTER SW
~TC ERASE B3C AP. 317-28B
~CUE ERASE B2C AP. 317-28C
~CTL REC B8C AP. 317-29A
~TC REC B7C AP. 317-29B
~CUE REC B6C AP. 317-29C
~FULL ERASE B4C AP. 317-28A
OSC CONT 31 8/8
NOR FWD B13C AP. 317-20C (NC)
SYS CONT 20 5/8
CN804
REMOTE 1PL 6
REMOTE 2PL 7
REMOTE 3PL 8
SW270. 831
~CTL ERASE B5C AP. 317-25A
REC INHI (AUD) B13A AP. 317-19C
REC INHI (VID) B10C PRD. B9C
TC REC B10B AP. 317-21A
A1 32 8/8
TC LINE OUT (X) A23B LO. A7B
TC LINE OUT (G) A23A LO. A6A
TC LINE OUT (B) A24A LO. A7A
TC READ B11C SY. A16A
10

*NOTE
PIN NO. OF EDGE CONNECTORS
EX.) A12 ABC
PIN NO.
CONNECTOR NO.
A:CN301
B:CN302

**AU-109** BOARD **(6/8)**
BOARD NO. 1-628-201-11, -12, -13
HDD-1000 ; #10001-

## AU-109 BOARD (7/8)

CPU

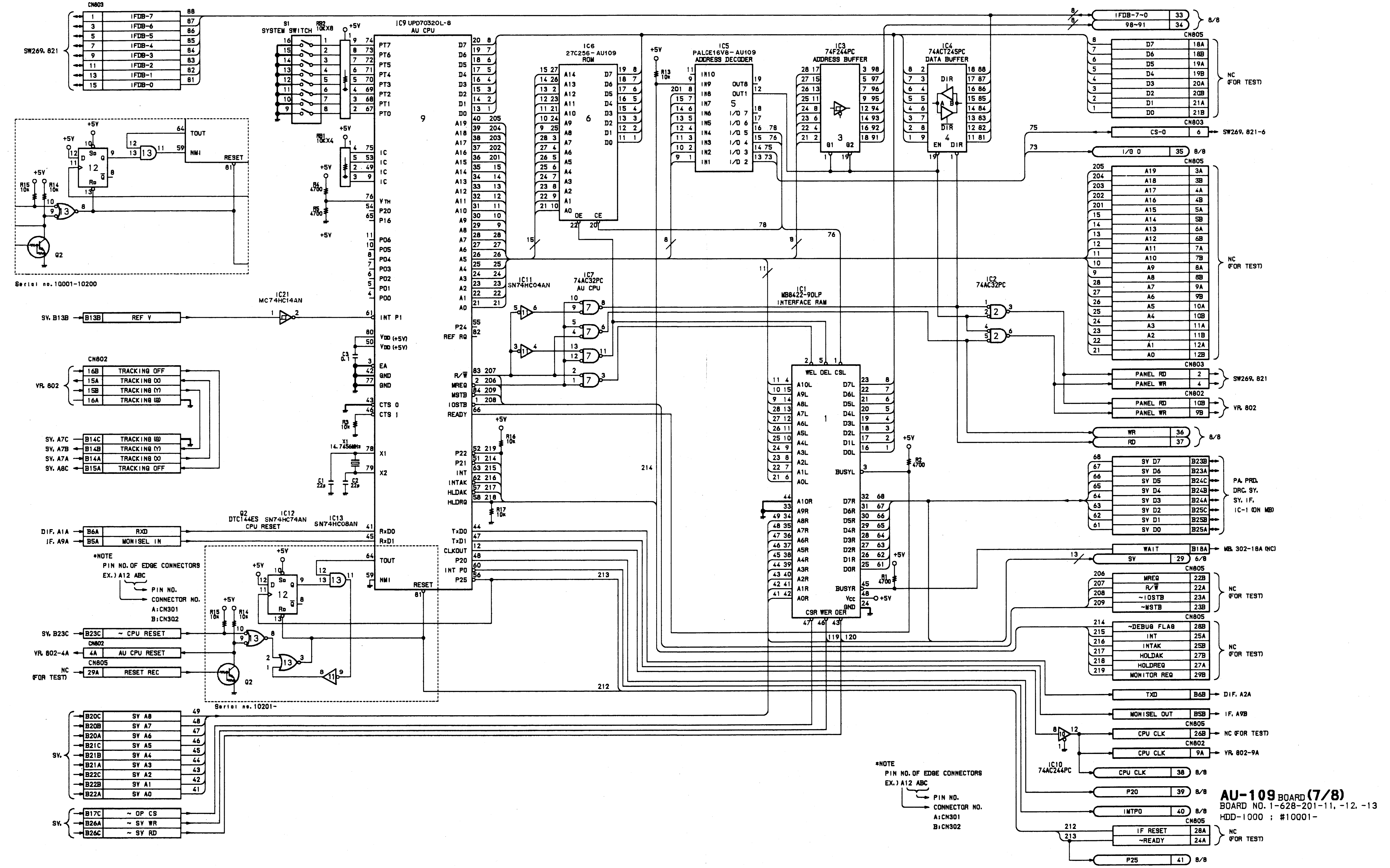
CN803
IFDB-7
IFDB-6
IFDB-5
IFDB-4
IFDB-3
IFDB-2
IFDB-1
IFDB-0
SW269, 821
S1 SYSTEM SWITCH
RB2 10KX8
RB1 10KX4
IC9 UPD70320L-8 AU CPU
PT7
PT6
PT5
PT4
PT3
PT2
PT1
PT0
IC
VTH
P20
P16
P06
P05
P04
P03
P02
P01
P00
INT P1
VDD (+5V)
EA
GND
CTS 0
CTS 1
X1
X2
RxD0
RxD1
TOUT
NMI
RESET
D7
D6
D5
D4
D3
D2
D1
D0
A19
A18
A17
A16
A15
A14
A13
A12
A11
A10
A9
A8
A7
A6
A5
A4
A3
A2
A1
A0
P24
REF RQ
R/W
MREQ
MSTB
IOSTB
READY
P22
P21
INT
INTAK
HLDAK
HLDRQ
TxD0
TxD1
CLKOUT
P20
INT P0
P25
IC6 27C256-AU109 ROM
OE
CE
IC5 PALCE16V8-AU109 ADDRESS DECODER
IN10
IN9
IN8
IN7
IN6
IN5
IN4
IN3
IN2
IN1
OUT8
OUT1
I/O 7
I/O 6
I/O 5
I/O 4
I/O 3
I/O 2
IC3 74F244PC ADDRESS BUFFER
G1
G2
IC4 74ACT245PC DATA BUFFER
DIR
EN
IC11 SN74HC04AN
IC7 74AC32PC AU CPU
IC2 74AC32PC
IC1 MB8422-90LP INTERFACE RAM
WEL OEL CSL
A10L
A9L
A8L
A7L
A6L
A5L
A4L
A3L
A2L
A1L
A0L
D7L
D6L
D5L
D4L
D3L
D2L
D1L
D0L
BUSYL
A10R
A9R
A8R
A7R
A6R
A5R
A4R
A3R
A2R
A1R
A0R
D7R
D6R
D5R
D4R
D3R
D2R
D1R
D0R
BUSYR
Vcc
GND
CSR WER OER
+5V
Serial no.10001-10200
TOUT
NMI
RESET
Q2
R15 10k
R14 10k
IC21 MC74HC14AN
SV. B13B
B13B
REF V
CN802
VR. 802
16B TRACKING OFF
15A TRACKING 00
15B TRACKING (Y)
16A TRACKING (G)
SV. A7C
SV. A7B
SV. A7A
SV. A8C
B14C TRACKING (G)
B14B TRACKING (Y)
B14A TRACKING 00
B15A TRACKING OFF
X1 14.7456MHz
C1 22p
C2 22p
R3 10k
R4 4700
R5 4700
R16 10k
R17 10k
R2 4700
R1 4700
R13 10k
Q2 DTC144ES
IC12 SN74HC74AN CPU RESET
IC13 SN74HC08AN
DIF. A1A
IF. A9A
B6A RXD
B5A MONISEL IN
*NOTE
PIN NO. OF EDGE CONNECTORS
EX.) A12 ABC
PIN NO.
CONNECTOR NO.
A:CN301
B:CN302
SV. B23C
B23C ~ CPU RESET
VR. 802-4A
4A AU CPU RESET
NC (FOR TEST)
CN805
29A RESET REC
Serial no.10201-
SV.
B20C SV A8
B20B SV A7
B20A SV A6
B21C SV A5
B21B SV A4
B21A SV A3
B22C SV A2
B22B SV A1
B22A SV A0
B17C ~ OP CS
B26A ~ SV WR
B26C ~ SV RD
IFDB-7~0 33
98~91 34
8/8
CN805
D7 18A
D6 18B
D5 19A
D4 19B
D3 20A
D2 20B
D1 21A
D0 21B
NC (FOR TEST)
CN803
CS-0 6
SW269, 821-6
I/O 0 35
8/8
CN805
A19 3A
A18 3B
A17 4A
A16 4B
A15 5A
A14 5B
A13 6A
A12 6B
A11 7A
A10 7B
A9 8A
A8 8B
A7 9A
A6 9B
A5 10A
A4 10B
A3 11A
A2 11B
A1 12A
A0 12B
NC (FOR TEST)
CN803
PANEL RD 2
PANEL WR 4
SW269, 821
CN802
PANEL RD 10B
PANEL WR 9B
VR. 802
WR 36
RD 37
8/8
SV D7 B23B
SV D6 B23A
SV D5 B24C
SV D4 B24B
SV D3 B24A
SV D2 B25C
SV D1 B25B
SV D0 B25A
PA. PRD.
DRC. SY.
SY. IF.
IC-1 (ON MB)
WAIT B18A
MB. 302-18A (NC)
SV 29
6/8
CN805
MREQ 22B
R/W 22A
~IOSTB 23A
~MSTB 23B
NC (FOR TEST)
CN805
~DEBUG FLAG 26B
INT 25A
INTAK 25B
HOLDAK 27B
HOLDREQ 27A
MONITOR REQ 29B
NC (FOR TEST)
TXD B6B
DIF. A2A
MONISEL OUT B5B
IF. A9B
CPU CLK 26B
NC (FOR TEST)
CN802
CPU CLK 9A
VR. 802-9A
IC10 74AC244PC
CPU CLK 38
8/8
P20 39
8/8
IMTP0 40
8/8
CN805
IF RESET 28A
~READY 24A
NC (FOR TEST)
P25 41
8/8
*NOTE
PIN NO. OF EDGE CONNECTORS
EX.) A12 ABC
PIN NO.
CONNECTOR NO.
A:CN301
B:CN302

**AU-109** BOARD (7/8)
BOARD NO. 1-628-201-11, -12, -13
HDD-1000 ; #10001-

## AU-109 BOARD (8/8)

Level Control Data Interface

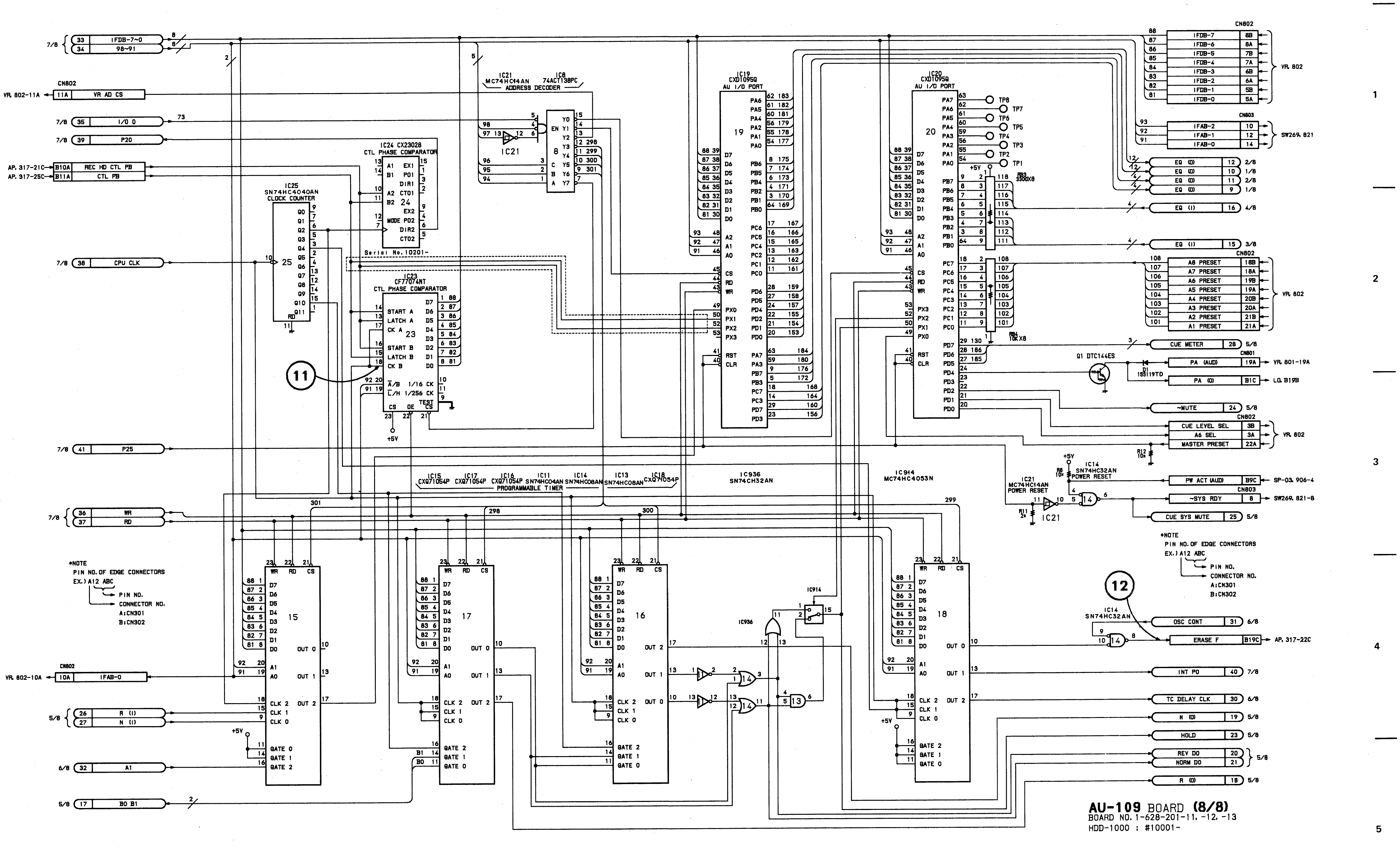
IC21 MC74HC14AN
IC8 74ACT138PC
ADDRESS DECODER
IC24 CX23028
CTL PHASE COMPARATOR
IC25 SN74HC4040AN
CLOCK COUNTER
IC23 CF77074NT
CTL PHASE COMPARATOR
Serial No.10201-
IC19 CXD1095Q AU I/O PORT
IC20 CXD1095Q AU I/O PORT
IC15 CXQ71054P
IC17 CXQ71054P
IC16 CXQ71054P
IC11 SN74HC04AN
IC14 SN74HC08AN
IC13 SN74HC08AN
IC18 CXQ71054P
PROGRAMMABLE TIMER
IC936 SN74CH32AN
IC914 MC74HC4053N
IC21 MC74HC14AN POWER RESET
IC14 SN74HC32AN POWER RESET
IC14 SN74HC32AN
Q1 DTC144ES
D1 1SS119TD
RB3 3300X8
RB4 10K X8
R12 10k
R11 2k
CN802
CN803
CN801
IFDB-7~0
98~91
VR AD CS
I/O 0
P20
REC HD CTL PB
CTL PB
CPU CLK
P25
WR
RD
IFAB-0
R (I)
N (I)
A1
B0 B1
IFDB-7
IFDB-6
IFDB-5
IFDB-4
IFDB-3
IFDB-2
IFDB-1
IFDB-0
IFAB-2
IFAB-1
IFAB-0
EQ (O)
EQ (I)
A8 PRESET
A7 PRESET
A6 PRESET
A5 PRESET
A4 PRESET
A3 PRESET
A2 PRESET
A1 PRESET
CUE METER
PA (AUD)
PA (O)
~MUTE
CUE LEVEL SEL
A6 SEL
MASTER PRESET
PW ACT (AUD)
~SYS RDY
CUE SYS MUTE
OSC CONT
ERASE F
INT PO
TC DELAY CLK
N (O)
HOLD
REV DO
NORM DO
R (O)
TP1
TP2
TP3
TP4
TP5
TP6
TP7
TP8
VR 802
SW269, 821
SW269, 821-8
SP-03, 906-4
VR 801-19A
LG B19B
AP, 317-22C
AP, 317-21C
AP, 317-25C
VR 802-11A
VR 802-10A
11
12
*NOTE
PIN NO. OF EDGE CONNECTORS
EX.) A12 ABC
PIN NO.
CONNECTOR NO.
A:CN301
B:CN302
+5V

**AU-109** BOARD **(8/8)**
BOARD NO. 1-628-201-11, -12, -13
HDD-1000 : #10001-

## AP-22 BOARD (1-628-200-11)

S/N up to 10299

Component Side

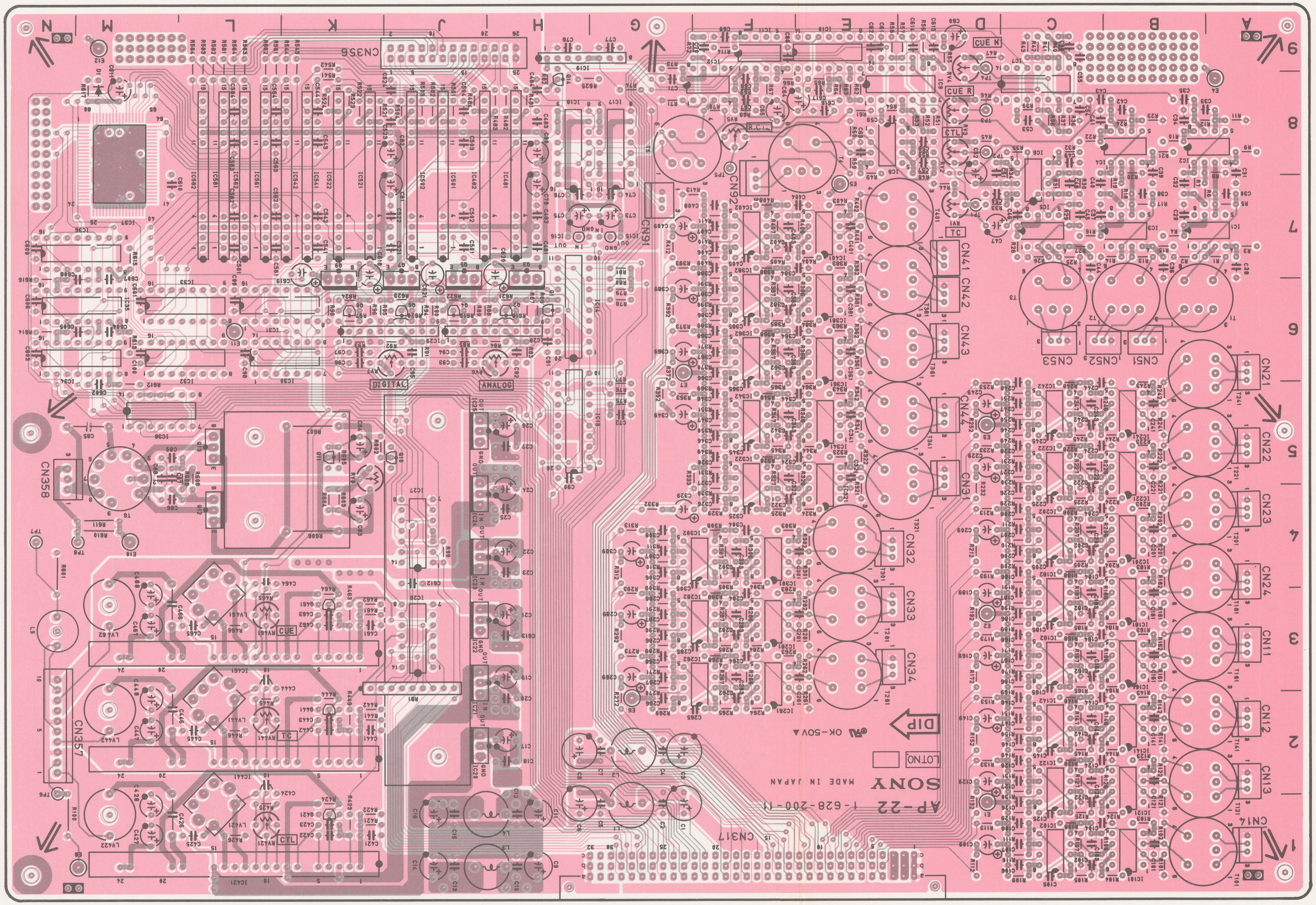
N
M
L
K
J
H
G
F
E
D
C
B
A
9
8
7
6
5
4
3
2
1
CN356
CN358
CN357
CN317
CN91
CN92
CN41
CN42
CN43
CN44
CN31
CN32
CN33
CN34
CN53
CN52
CN51
CN21
CN22
CN23
CN24
CN11
CN12
CN13
CN14
DIGITAL
ANALOG
CUE
TC
CTL
CUE N
CUE R
R.CTL
DIP
OK-50V
LOTNO
SONY
MADE IN JAPAN
AP-22 1-628-200-11

1-628-200-11 COMPONENT SIDE

1-628-200-11 SOLDER SIDE

**AP-22 (1-628-200-11)**

**HDD-1000**

| | |
|---|---|
| CN11 | A3 |
| CN12 | A2 |
| CN13 | A2 |
| CN14 | A1 |
| CN21 | A6 |
| CN22 | A5 |
| CN23 | A4 |
| CN24 | A4 |
| CN31 | D5 |
| CN32 | D4 |
| CN33 | D3 |
| CN34 | D3 |
| CN41 | D7 |
| CN42 | D6 |
| CN43 | D6 |
| CN44 | D5 |
| CN51 | B6 |
| CN52 | B6 |
| CN53 | C6 |
| CN91 | G7 |
| CN92 | F7 |
| CN317 | F1 |
| CN356 | K9 |
| CN357 | N2 |
| CN358 | N5 |
| D1 | M8 |
| E1 | D1 |
| E2 | D3 |
| E3 | D5 |
| E4 | A8 |
| E5 | E7 |
| E6 | G2 |
| E7 | G5 |
| E8 | N1 |
| E10 | M4 |
| E11 | L6 |
| E12 | M9 |
| IC1 | A7 |
| IC2 | B8 |
| IC3 | B7 |
| IC4 | C8 |
| IC5 | C7 |
| IC6 | C8 |
| IC7 | C9 |
| IC8 | E8 |
| IC9 | D8 |
| IC10 | E9 |
| IC11 | F9 |
| IC12 | F9 |
| IC13 | G5 |
| IC14 | G6 |
| IC15 | G7 |
| IC16 | H7 |
| IC17 | G8 |
| IC18 | H8 |
| IC19 | H9 |
| IC20 | J2 |
| IC21 | J2 |
| IC22 | J3 |
| IC23 | J4 |
| IC24 | J4 |
| IC25 | J5 |
| IC26 | J3 |
| IC27 | J4 |
| IC28 | H6 |
| IC29 | J6 |
| IC30 | K6 |
| IC31 | L6 |
| IC32 | L6 |
| IC33 | L6 |
| IC34 | N6 |
| IC35 | M6 |
| IC36 | M7 |
| IC37 | M7 |
| IC38 | M5 |
| IC101 | B1 |
| IC102 | C1 |
| IC121 | B1 |
| IC122 | C2 |
| IC141 | B2 |
| IC142 | C2 |
| IC161 | B3 |
| IC162 | C3 |
| IC181 | B3 |
| IC182 | C4 |
| IC201 | B4 |
| IC202 | C4 |
| IC221 | B4 |
| IC222 | C5 |
| IC241 | B5 |
| IC242 | C5 |
| IC261 | F2 |
| IC262 | F3 |
| IC281 | F3 |
| IC282 | F3 |
| IC301 | F4 |
| IC302 | F4 |
| IC321 | E4 |
| IC322 | F5 |
| IC341 | E5 |
| IC342 | F5 |
| IC361 | E5 |
| IC362 | F6 |
| IC381 | E6 |
| IC382 | F7 |
| IC401 | E7 |
| IC402 | F7 |
| IC421 | L1 |
| IC441 | L2 |
| IC461 | L3 |
| IC481 | H7 |
| IC482 | J7 |
| IC501 | J7 |
| IC502 | J7 |
| IC521 | K7 |
| IC522 | K7 |
| IC541 | K7 |
| IC542 | K7 |
| IC561 | L7 |
| IC562 | L7 |
| IC581 | L7 |
| IC582 | L7 |
| LV421 | L1 |
| LV422 | M1 |
| LV441 | L2 |
| LV422 | M2 |
| LV461 | L3 |
| LV462 | M3 |
| Q1 | H6 |
| Q2 | H6 |
| Q3 | H7 |
| Q4 | J6 |
| Q5 | J7 |
| Q6 | J6 |
| Q7 | J7 |
| Q8 | K6 |
| Q9 | K7 |
| Q10 | J5 |
| Q11 | K5 |
| Q12 | L4 |
| Q13 | L5 |
| Q14 | H8 |
| Q421 | K1 |
| Q441 | K2 |
| Q461 | K3 |
| RB1 | J2 |
| RV1 | D7 |
| RV2 | D8 |
| RV3 | D8 |
| RV4 | D8 |
| RV5 | F8 |
| RV6 | J6 |
| RV7 | K6 |
| RV8 | K5 |
| RV421 | L1 |
| RV441 | L2 |
| RV461 | L3 |
| T1 | A6 |
| T2 | C6 |
| T3 | C6 |
| T4 | E8 |
| T5 | G8 |
| T6 | M4 |
| T101 | A1 |
| T121 | A1 |
| T141 | A2 |
| T161 | A3 |
| T181 | A3 |
| T201 | A4 |
| T221 | A5 |
| T241 | A5 |
| T261 | E2 |
| T281 | E3 |
| T301 | E4 |
| T321 | D4 |
| T341 | D5 |
| T361 | D6 |
| T381 | D6 |
| T401 | D7 |
| TP1 | D7 |
| TP2 | D8 |
| TP3 | D8 |
| TP4 | D8 |
| TP5 | F8 |
| TP6 | N2 |
| TP7 | N4 |
| TP8 | N4 |

**AP-22** **BOARD (1-628-200-12)** S/N 10301and higher

Component Side

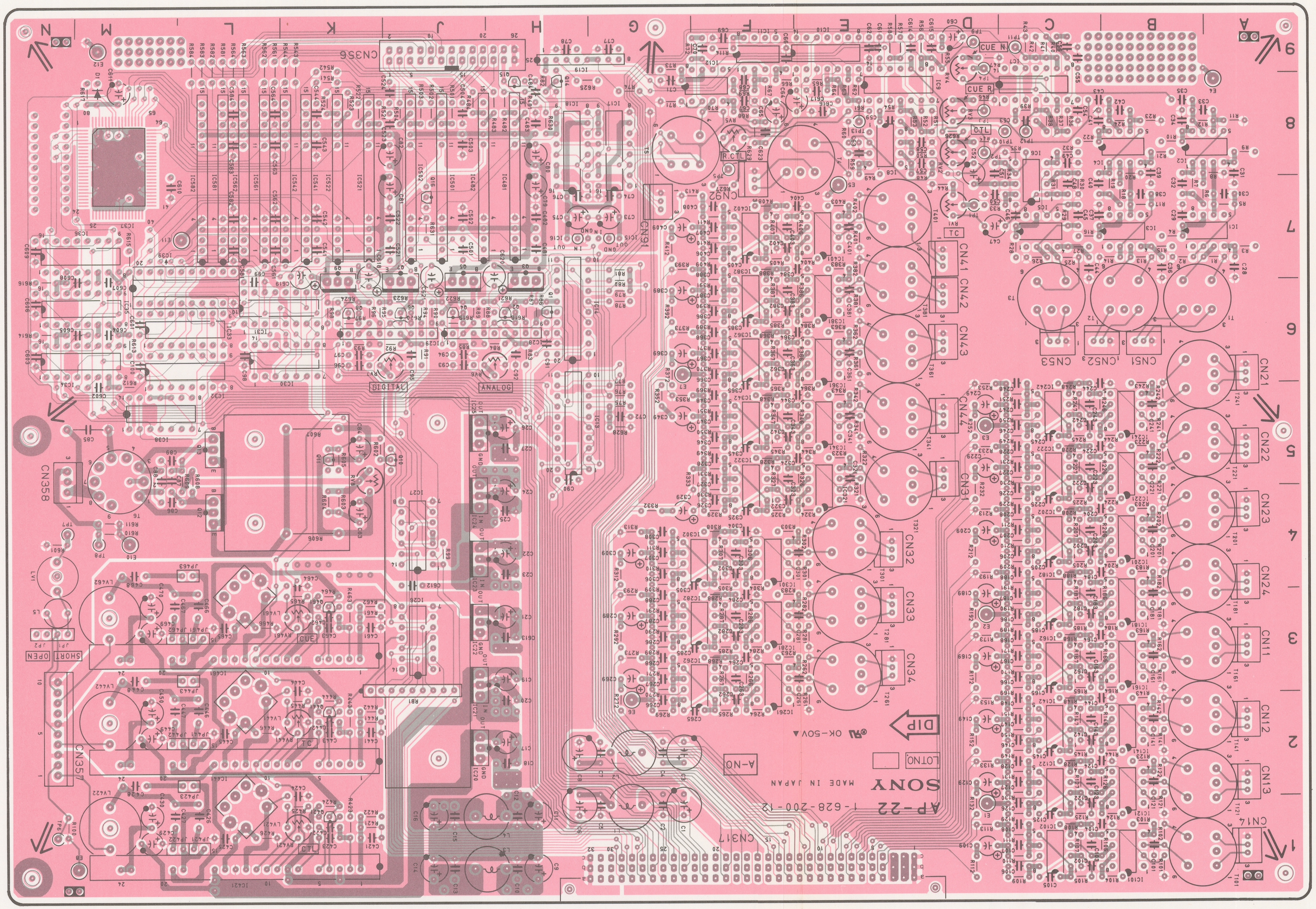
N
M
L
K
J
H
G
F
E
D
C
B
A
1
2
3
4
5
6
7
8
9
CN356
CN358
CN357
CN317
CN91
CN92
CN41
CN42
CN43
CN44
CN31
CN32
CN33
CN34
CN51
CN52
CN53
CN21
CN22
CN23
CN24
CN11
CN12
CN13
CN14
DIGITAL
ANALOG
CUE
TC
CTL
CUE N
CUE R
R.CTL
SHORT
OPEN
DIP
OK-50V
LOTNO
A-NO
SONY
AP-22
1-628-200-12
MADE IN JAPAN

1-628-200-12 COMPONENT SIDE

1-628-200-12 SOLDER SIDE

**AP-22 (1-628-200-12)**

**HDD-1000**

| | |
|---|---|
| CN11 | A3 |
| CN12 | A2 |
| CN13 | A2 |
| CN14 | A1 |
| CN21 | A6 |
| CN22 | A5 |
| CN23 | A4 |
| CN24 | A4 |
| CN31 | D5 |
| CN32 | D4 |
| CN33 | D3 |
| CN34 | D3 |
| CN41 | D7 |
| CN42 | D6 |
| CN43 | D6 |
| CN44 | D5 |
| CN51 | B6 |
| CN52 | B6 |
| CN53 | C6 |
| CN91 | G7 |
| CN92 | F7 |
| CN317 | F1 |
| CN356 | K9 |
| CN357 | N2 |
| CN358 | N5 |
| D1 | M8 |
| E1 | D1 |
| E2 | D3 |
| E3 | D5 |
| E4 | A8 |
| E5 | E7 |
| E6 | G2 |
| E7 | G5 |
| E8 | N1 |
| E10 | M4 |
| E11 | M7 |
| E12 | M9 |
| IC1 | A7 |
| IC2 | B8 |
| IC3 | B7 |
| IC4 | C8 |
| IC5 | C7 |
| IC6 | C8 |
| IC8 | E8 |
| IC9 | D8 |
| IC10 | E9 |
| IC11 | F9 |
| IC12 | F9 |
| IC13 | G5 |
| IC14 | G6 |
| IC15 | G7 |
| IC16 | H7 |
| IC17 | G8 |
| IC18 | H8 |
| IC19 | H9 |
| IC20 | J2 |
| IC21 | J2 |
| IC22 | J3 |
| IC23 | J4 |
| IC24 | J4 |
| IC25 | J5 |
| IC26 | J3 |
| IC27 | J4 |
| IC28 | H6 |
| IC29 | J6 |
| IC30 | K6 |
| IC31 | L6 |
| IC32 | L5 |
| IC33 | L6 |
| IC34 | N6 |
| IC35 | M6 |
| IC37 | M7 |
| IC38 | M5 |
| IC39 | M7 |
| IC101 | B1 |
| IC102 | C1 |
| IC121 | B1 |
| IC122 | C2 |
| IC141 | B2 |
| IC142 | C2 |
| IC161 | B3 |
| IC162 | C3 |
| IC181 | B3 |
| IC182 | C4 |
| IC201 | B4 |
| IC202 | C4 |
| IC221 | B4 |
| IC222 | C5 |
| IC241 | B5 |
| IC242 | C5 |
| IC261 | F2 |
| IC262 | F3 |
| IC281 | F3 |
| IC282 | F3 |
| IC301 | F4 |
| IC302 | F4 |
| IC321 | E4 |
| IC322 | F5 |
| IC341 | E5 |
| IC342 | F5 |
| IC361 | E5 |
| IC362 | F6 |
| IC381 | E6 |
| IC382 | F7 |
| IC401 | E7 |
| IC402 | F7 |
| IC421 | L1 |
| IC441 | L2 |
| IC461 | L3 |
| IC481 | H7 |
| IC482 | J7 |
| IC501 | J7 |
| IC502 | J7 |
| IC521 | K7 |
| IC522 | K7 |
| IC541 | K7 |
| IC542 | K7 |
| IC561 | L7 |
| IC562 | L7 |
| IC581 | L7 |
| IC582 | L7 |
| LV1 | N4 |
| LV421 | L1 |
| LV422 | M2 |
| LV441 | L2 |
| LV442 | M3 |
| LV461 | L3 |
| LV462 | M4 |
| Q1 | H6 |
| Q2 | H6 |
| Q3 | H7 |
| Q4 | J6 |
| Q5 | J7 |
| Q6 | J6 |
| Q7 | J7 |
| Q8 | K6 |
| Q9 | K7 |
| Q10 | J5 |
| Q11 | K5 |
| Q12 | L4 |
| Q13 | L5 |
| Q14 | H8 |
| Q15 | H8 |
| Q16 | J7 |
| Q421 | K1 |
| Q441 | K2 |
| Q461 | K3 |
| RB1 | J2 |
| RV1 | D7 |
| RV2 | D8 |
| RV3 | D8 |
| RV4 | D8 |
| RV5 | F8 |
| RV6 | J6 |
| RV7 | K6 |
| RV8 | K5 |
| RV421 | K1 |
| RV441 | K2 |
| RV461 | K3 |
| T1 | A6 |
| T2 | C6 |
| T3 | C6 |
| T4 | E8 |
| T5 | G8 |
| T6 | M4 |
| T101 | A1 |
| T121 | A1 |
| T141 | A2 |
| T161 | A3 |
| T181 | A3 |
| T201 | A4 |
| T221 | A5 |
| T241 | A5 |
| T261 | E2 |
| T281 | E3 |
| T301 | E4 |
| T321 | D4 |
| T341 | D5 |
| T361 | D6 |
| T381 | D6 |
| T401 | D7 |
| TP1 | D7 |
| TP2 | D8 |
| TP3 | D8 |
| TP4 | D8 |
| TP5 | F8 |
| TP6 | N1 |
| TP7 | N4 |
| TP8 | M4 |
| TP9 | D9 |
| TP10 | C8 |
| TP11 | C9 |
| TP12 | C8 |
| TP13 | E8 |

## AP-22 BOARD WAVEFORMS

OSCILLOSCOPE : TEKTRONIX 2465
VERTICAL : indicated on the photo itself
HORIZONTAL : indicated on the photo itself
FREQUENCY RESPONSE : 300 MHz or 20 MHz

①
PLAY
1/5 CN317-26C
1/5 CN317-27A

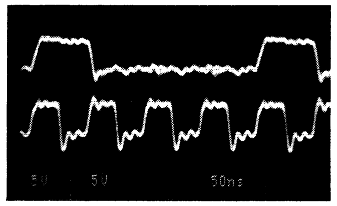

②
PLAY
1/5 CN317-26A

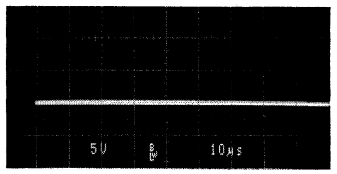

拡大
⇩

③
PLAY
1/5 CN317-26A

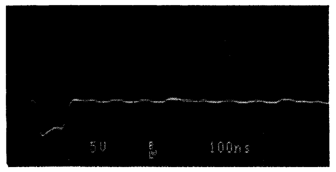

④
PLAY
1/5 IC582-11

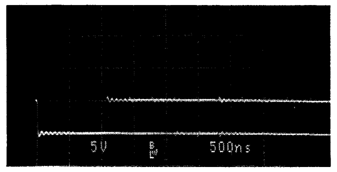

⑤
REC
2/5 IC501-1

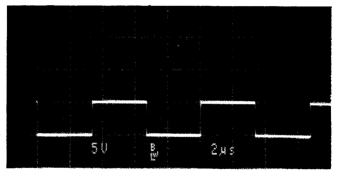

⑥
REC
2/5 IC482-1

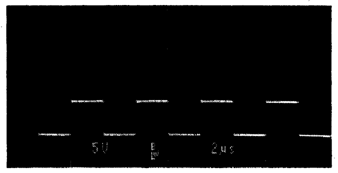

⑦
REC
2/5 IC481-1

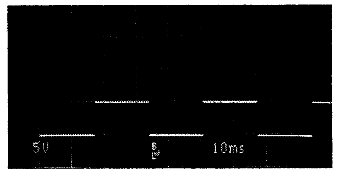

⑧
REC
2/5 CN317-22C

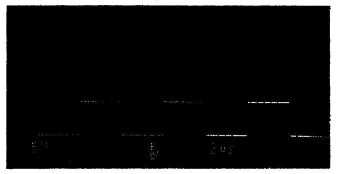

⑨
PLAY
3/5 TP4
WITHOUT SIGNAL

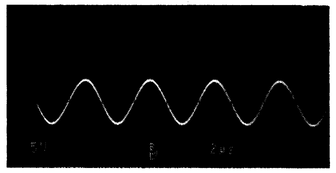

⑩
PLAY
3/5 TP4
WITH SIGNAL

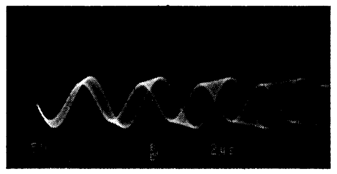

⑪
PLAY
3/5 TP3
WITHOUT SIGNAL

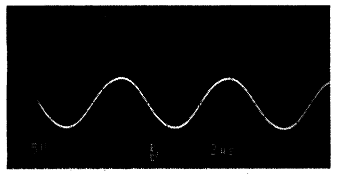

⑫
PLAY
3/5 TP3
WITH SIGNAL

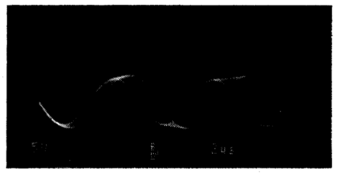

⑬
PLAY
3/5 TP1

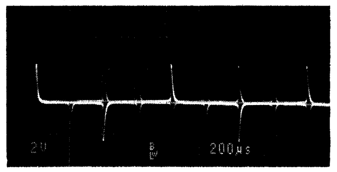

⑭
PLAY
3/5 TP10

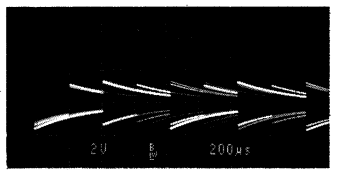

⑮
PLAY
3/5 TP2

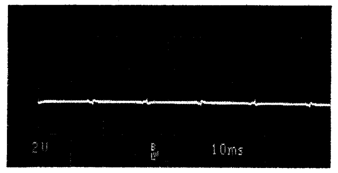

⑯
PLAY
3/5 TP9

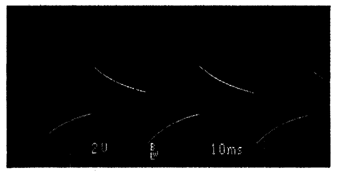

## **AP-22 BOARD (1/5)** Audio TR1 – TR8 Rec Amplifier

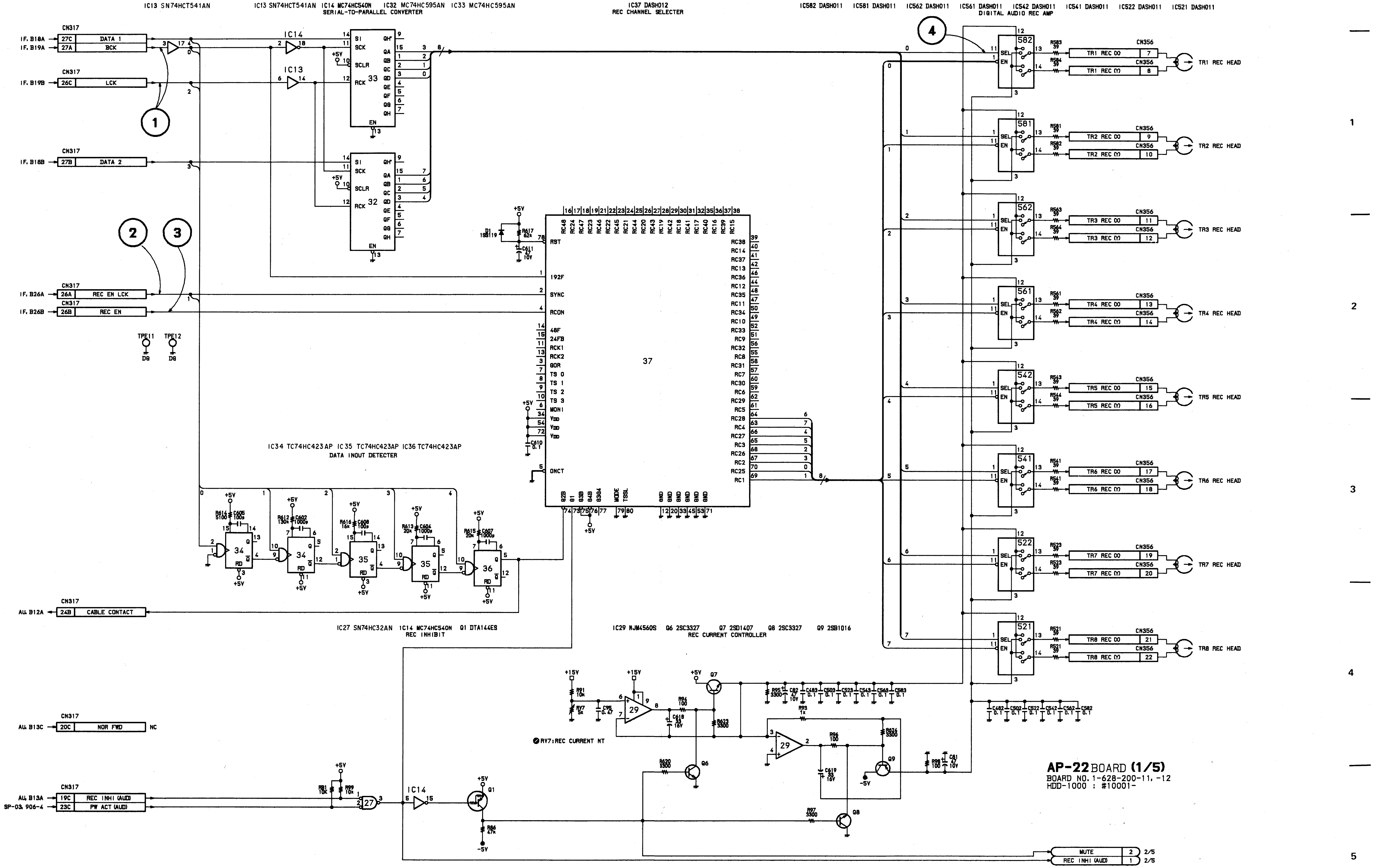
IC13 SN74HCT541AN
IC13 SN74HCT541AN IC14 MC74HC540N IC32 MC74HC595AN IC33 MC74HC595AN
SERIAL-TO-PARALLEL CONVERTER
IC37 DASH012
REC CHANNEL SELECTER
IC582 DASH011 IC581 DASH011 IC562 DASH011 IC561 DASH011 IC542 DASH011 IC541 DASH011 IC522 DASH011 IC521 DASH011
DIGITAL AUDIO REC AMP
CN317
IF. B18A
IF. B19A
DATA 1
BCK
IF. B19B
LCK
IF. B18B
DATA 2
IF. B26A
REC EN LCK
IF. B26B
REC EN
TPE11
TPE12
DG
1
2
3
4
IC14
IC13
SI
SCK
SCLR
RCK
EN
33
32
+5V
RST
192F
SYNC
RCON
48F
24FB
RCK1
RCK2
GOR
TS 0
TS 1
TS 2
TS 3
MONI
VDD
ONCT
37
D1
1SS119
R617
62k
C611
47
10V
C610
0.1
SEL
EN
582
581
562
561
542
541
522
521
CN356
TR1 REC (X)
TR1 REC (Y)
TR1 REC HEAD
TR2 REC (X)
TR2 REC (Y)
TR2 REC HEAD
TR3 REC (X)
TR3 REC (Y)
TR3 REC HEAD
TR4 REC (X)
TR4 REC (Y)
TR4 REC HEAD
TR5 REC (X)
TR5 REC (Y)
TR5 REC HEAD
TR6 REC (X)
TR6 REC (Y)
TR6 REC HEAD
TR7 REC (X)
TR7 REC (Y)
TR7 REC HEAD
TR8 REC (X)
TR8 REC (Y)
TR8 REC HEAD
IC34 TC74HC423AP IC35 TC74HC423AP IC36 TC74HC423AP
DATA INOUT DETECTER
34
35
36
AU. B12A
CABLE CONTACT
IC27 SN74HC32AN IC14 MC74HC540N Q1 DTA144ES
REC INHIBIT
IC29 NJM4560S Q6 2SC3327 Q7 2SD1407 Q8 2SC3327 Q9 2SB1016
REC CURRENT CONTROLLER
AU. B13C
NOR FWD
NC
AU. B13A
SP-03, 906-4
REC INHI (AUD)
PW ACT (AUD)
27
Q1
+15V
-5V
RV7:REC CURRENT NT
29
Q6
Q7
Q8
Q9
MUTE
REC INHI (AUD)
2/5
AP-22 BOARD (1/5)
BOARD NO. 1-628-200-11, -12
HDD-1000 : #10001-
1
2
3
4
5

## AP-22 BOARD (2/5) Cue/TC/CTL Rec Amplifier and Erase Amplifier

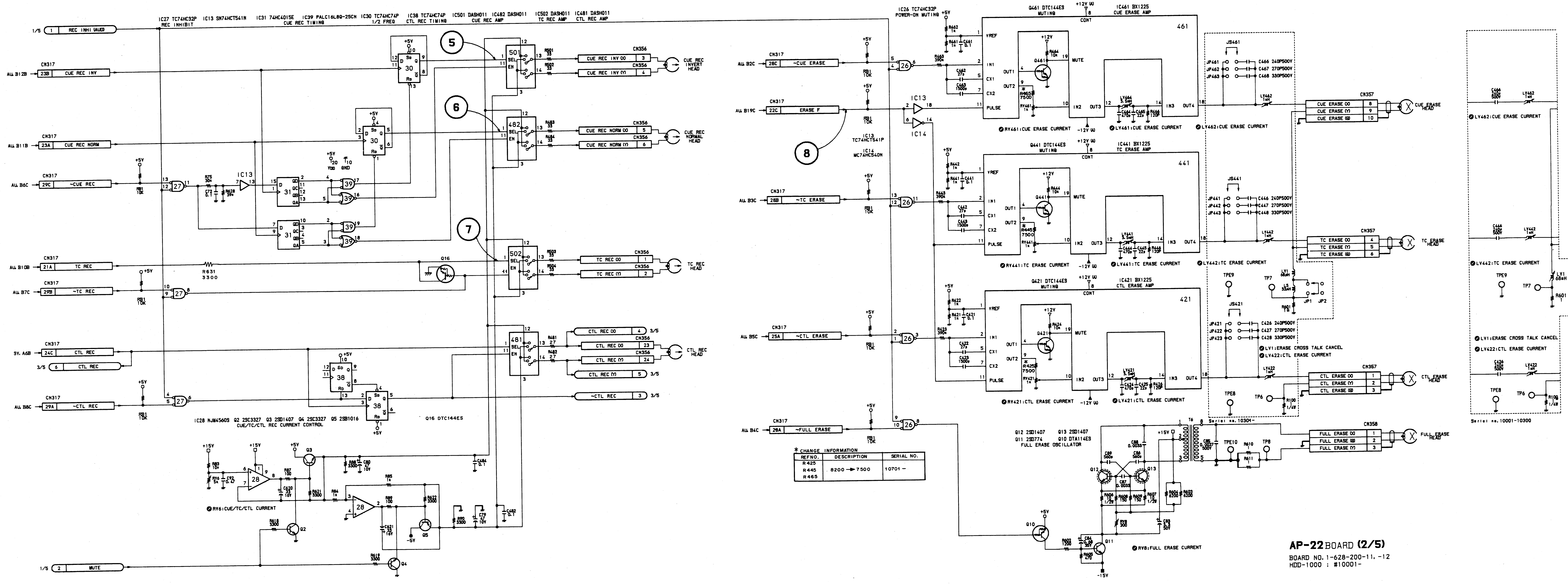
IC27 TC74HC32P REC INHIBIT
IC13 SN74HCT541N
IC31 74HC4015E CUE REC TIMING
IC39 PALC16L8Q-25CN
IC30 TC74HC74P 1/2 FREQ
IC38 TC74HC74P CTL REC TIMING
IC501 DASH011 CUE REC AMP
IC482 DASH011
IC502 DASH011 TC REC AMP
IC481 DASH011 CTL REC AMP
REC INHI (AUD)
CUE REC INV
CUE REC NORM
~CUE REC
TC REC
~TC REC
CTL REC
~CTL REC
MUTE
CUE REC INV (X)
CUE REC INV (Y)
CUE REC INVERT HEAD
CUE REC NORM (X)
CUE REC NORM (Y)
CUE REC NORMAL HEAD
TC REC (X)
TC REC (Y)
TC REC HEAD
CTL REC (X)
CTL REC (Y)
CTL REC HEAD
IC28 NJM4560S Q2 2SC3327 Q3 2SD1407 Q4 2SC3327 Q5 2SB1016
CUE/TC/CTL REC CURRENT CONTROL
Q16 DTC144ES
RV6:CUE/TC/CTL CURRENT
IC26 TC74HC32P POWER-ON MUTING
~CUE ERASE
ERASE F
~TC ERASE
~CTL ERASE
~FULL ERASE
IC13 TC74HCT541P
IC14 MC74HC540N
Q461 DTC144ES MUTING
IC461 BX1225 CUE ERASE AMP
Q441 DTC144ES MUTING
IC441 BX1225 TC ERASE AMP
Q421 DTC144ES MUTING
IC421 BX1225 CTL ERASE AMP
RV461:CUE ERASE CURRENT
LV461:CUE ERASE CURRENT
LV462:CUE ERASE CURRENT
RV441:TC ERASE CURRENT
LV441:TC ERASE CURRENT
LV442:TC ERASE CURRENT
RV421:CTL ERASE CURRENT
LV421:CTL ERASE CURRENT
LV1:ERASE CROSS TALK CANCEL
LV422:CTL ERASE CURRENT
CUE ERASE (X)
CUE ERASE (Y)
CUE ERASE (G)
CUE ERASE HEAD
TC ERASE (X)
TC ERASE (Y)
TC ERASE (G)
TC ERASE HEAD
CTL ERASE (X)
CTL ERASE (Y)
CTL ERASE (G)
CTL ERASE HEAD
Q12 2SD1407 Q13 2SD1407
Q11 2SD774 Q10 DTA114ES
FULL ERASE OSCILLATOR
RV8:FULL ERASE CURRENT
FULL ERASE (X)
FULL ERASE (G)
FULL ERASE (Y)
FULL ERASE HEAD
Serial no.10301-
Serial no.10001-10300
5
6
7
8

* CHANGE INFORMATION

| REFNO. | DESCRIPTION | SERIAL NO. |
|---|---|---|
| R425<br>R445<br>R465 | 8200 → 7500 | 10701 – |

**AP-22** BOARD **(2/5)**
BOARD NO. 1-628-200-11, -12
HDD-1000 : #10001-

## **AP-22 BOARD (3/5)** Cue/TC/CTL PB Amplifier

S/N up to 10603 (J)
S/N up to 10600 (UC)
S/N up to 10617 (EK)

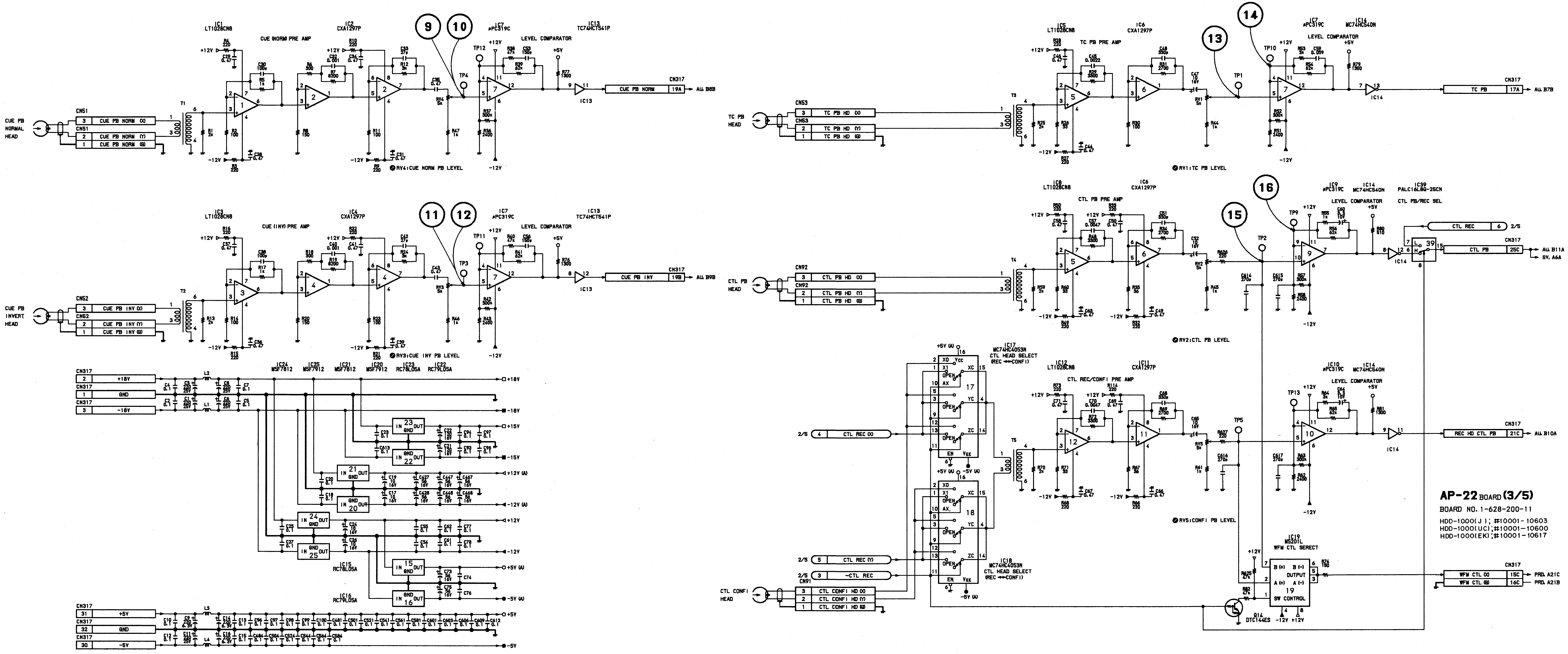
CUE PB NORMAL HEAD
CN51
CUE PB NORM (X)
CUE PB NORM (Y)
CUE PB NORM (G)
T1
IC1 LT1028CN8
CUE (NORM) PRE AMP
IC2 CXA1297P
IC7 μPC319C
LEVEL COMPARATOR
IC13 TC74HCT541P
CN317
CUE PB NORM
19A
AU B8B
RV4:CUE NORM PB LEVEL
⑨
⑩
TP4
TP12
CUE PB INVERT HEAD
CN52
CUE PB INV (X)
CUE PB INV (Y)
CUE PB INV (G)
T2
IC3 LT1028CN8
CUE (INV) PRE AMP
IC4 CXA1297P
⑪
⑫
TP3
TP11
CUE PB INV
19B
AU B9B
RV3:CUE INV PB LEVEL
IC24 M5F7812
IC25 M5F7912
IC21 M5F7812
IC20 M5F7912
IC23 RC78L05A
IC22 RC79L05A
IC15 RC78L05A
IC16 RC79L05A
+18V
GND
-18V
+15V
-15V
+12V (A)
-12V (A)
+12V
-12V
+5V (A)
-5V (A)
+5V
-5V
TC PB HEAD
CN53
TC PB HD (X)
TC PB HD (Y)
TC PB HD (G)
T3
IC5 LT1028CN8
TC PB PRE AMP
IC6 CXA1297P
⑬
⑭
TP1
TP10
IC7 μPC319C
IC14 MC74HC540N
LEVEL COMPARATOR
TC PB
17A
AU B7B
RV1:TC PB LEVEL
CTL PB HEAD
CN92
CTL PB HD (X)
CTL PB HD (Y)
CTL PB HD (G)
T4
IC8 LT1028CN8
CTL PB PRE AMP
IC6 CXA1297P
⑮
⑯
TP2
TP9
IC9 μPC319C
IC14 MC74HC540N
IC39 PALC16L8Q-25CN
CTL PB/REC SEL
CTL REC
CTL PB
25C
AU B11A
SV, A6A
RV2:CTL PB LEVEL
IC17 MC74HC4053N
CTL HEAD SELECT (REC ↔ CONF I)
IC18 MC74HC4053N
CTL HEAD SELECT (REC ↔ CONF I)
CTL REC (X)
CTL REC (Y)
~CTL REC
2/5
CTL CONF I HEAD
CN91
CTL CONF I HD (X)
CTL CONF I HD (Y)
CTL CONF I HD (G)
IC12 LT1028CN8
CTL REC/CONF I PRE AMP
IC11 CXA1297P
TP5
TP13
IC10 μPC319C
IC14 MC74HC540N
REC HD CTL PB
21C
AU B10A
RV5:CONF I PB LEVEL
IC19 M5201L
WFM CTL SERECT
SW CONTROL
Q14 DTC144ES
WFM CTL (X)
WFM CTL (G)
15C
16C
PRD, A21C
PRD, A21B

**AP-22** BOARD **(3/5)**
BOARD NO. 1-628-200-11
HDD-1000(J) ;#10001-10603
HDD-1000(UC);#10001-10600
HDD-1000(EK);#10001-10617

## **AP-22** BOARD (3/5) Cue/TC/CTL PB Amplifier

S/N 10604 and higher (J)
S/N 10601 and higher (UC)
S/N 10618 and higher (EK)

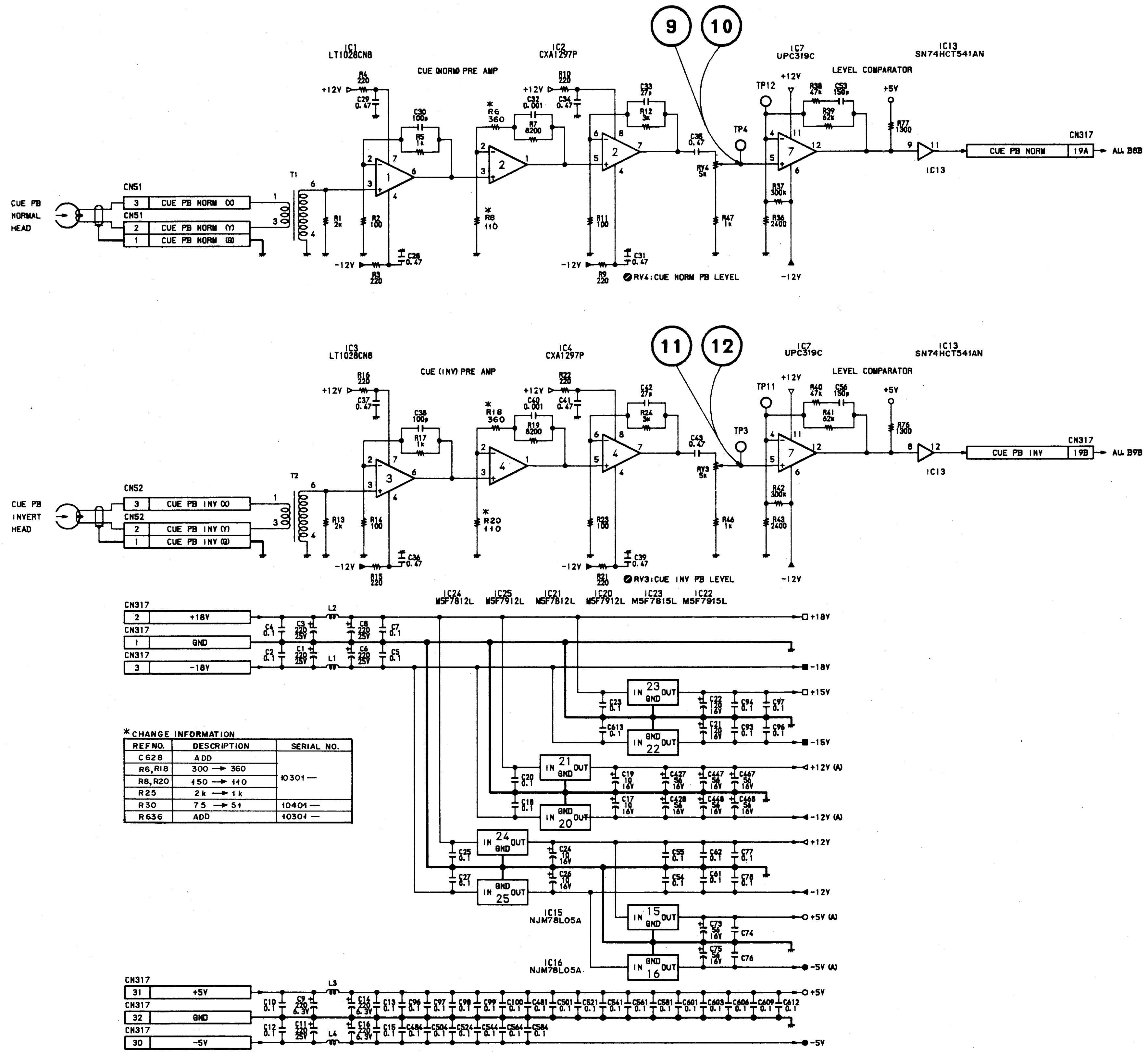

9
10
11
12
IC1 LT1028CN8
CUE (NORM) PRE AMP
IC2 CXA1297P
IC7 UPC319C
LEVEL COMPARATOR
IC13 SN74HCT541AN
CUE PB NORMAL HEAD
CN51
CUE PB NORM (X)
CUE PB NORM (Y)
CUE PB NORM (G)
T1
TP12
TP4
RV4:CUE NORM PB LEVEL
CN317
CUE PB NORM
19A
AU B6B
IC3 LT1028CN8
CUE (INV) PRE AMP
IC4 CXA1297P
CUE PB INVERT HEAD
CN52
CUE PB INV (X)
CUE PB INV (Y)
CUE PB INV (G)
T2
TP11
TP3
RV3:CUE INV PB LEVEL
CUE PB INV
19B
AU B9B
+12V
-12V
+5V
IC24 M5F7812L
IC25 M5F7912L
IC21 M5F7812L
IC20 M5F7912L
IC23 M5F7815L
IC22 M5F7915L
+18V
GND
-18V
L1
L2
+15V
-15V
+12V (A)
-12V (A)
+12V
-12V
+5V (A)
-5V (A)
IC15 NJM78L05A
IC16 NJM78L05A
+5V
-5V
L3
L4

*CHANGE INFORMATION

| REF NO. | DESCRIPTION | SERIAL NO. |
|---|---|---|
| C628 | ADD | 10301 — |
| R6, R18 | 300 → 360 | |
| R8, R20 | 150 → 110 | |
| R25 | 2k → 1k | |
| R30 | 75 → 51 | 10401 — |
| R636 | ADD | 10301 — |

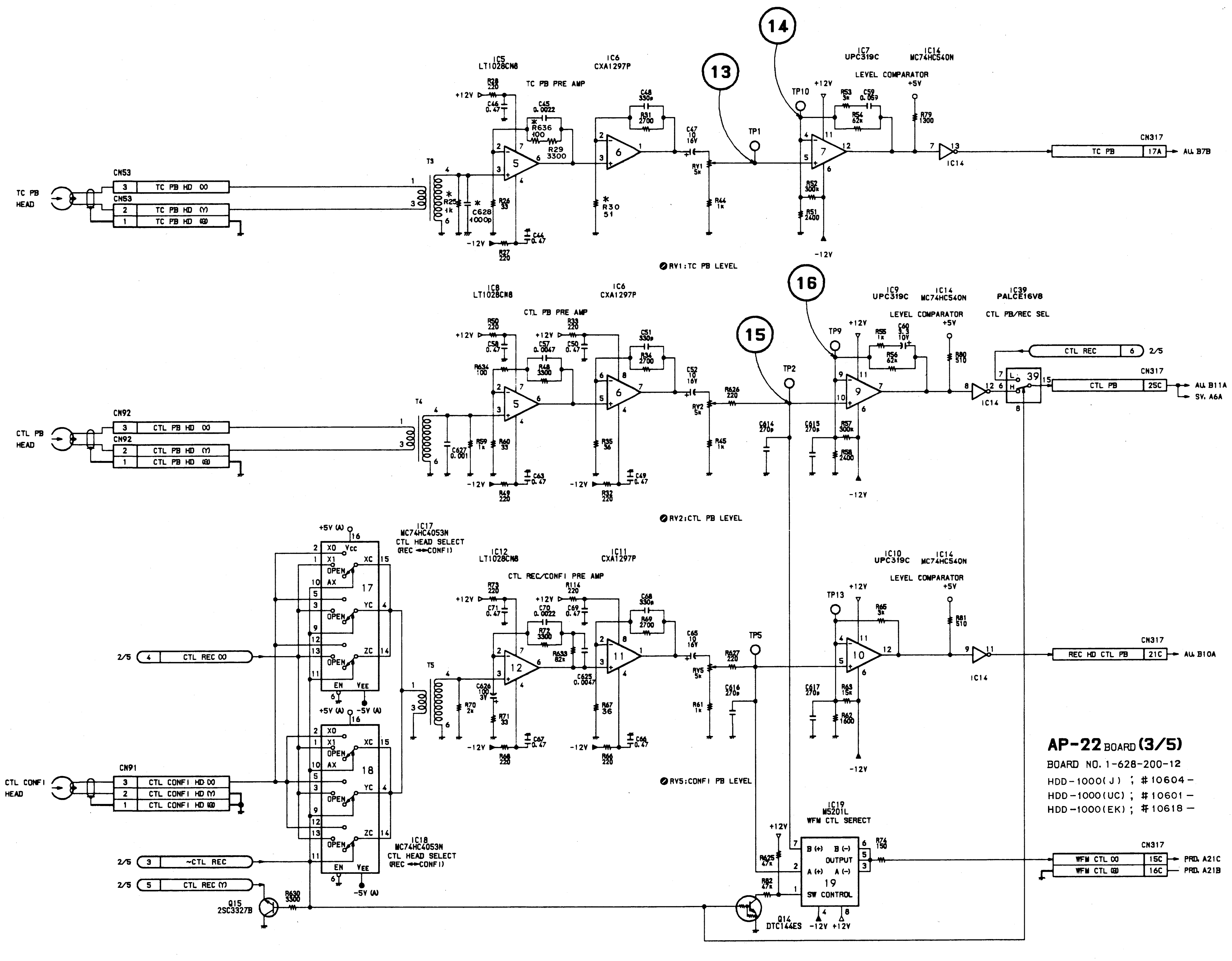

13
14
15
16
IC5 LT1028CN8
TC PB PRE AMP
IC6 CXA1297P
IC7 UPC319C
IC14 MC74HC540N
LEVEL COMPARATOR
TC PB HEAD
CN53
TC PB HD (X)
TC PB HD (Y)
TC PB HD (G)
T3
TP10
TP1
RV1:TC PB LEVEL
CN317
TC PB
17A
AU B7B
IC8 LT1028CN8
CTL PB PRE AMP
IC9 UPC319C
IC39 PALCE16V8
CTL PB/REC SEL
CTL PB HEAD
CN92
CTL PB HD (X)
CTL PB HD (Y)
CTL PB HD (G)
T4
TP9
TP2
RV2:CTL PB LEVEL
CTL REC
2/5
CTL PB
25C
AU B11A
SY. A6A
IC17 MC74HC4053N
CTL HEAD SELECT (REC ↔ CONFI)
IC12 LT1028CN8
CTL REC/CONFI PRE AMP
IC11 CXA1297P
IC10 UPC319C
CTL REC (X)
T5
TP5
TP13
RV5:CONFI PB LEVEL
REC HD CTL PB
21C
AU B10A
CTL CONFI HEAD
CN91
CTL CONFI HD (X)
CTL CONFI HD (Y)
CTL CONFI HD (G)
IC18 MC74HC4053N
CTL HEAD SELECT (REC ↔ CONFI)
~CTL REC
CTL REC (Y)
Q15 2SC3327B
IC19 M5201L
WFM CTL SERECT
SW CONTROL
Q14 DTC144ES
WFM CTL (X)
WFM CTL (G)
15C
16C
PRD. A21C
PRD. A21B

**AP-22** BOARD **(3/5)**
BOARD NO. 1-628-200-12
HDD-1000(J) ; #10604 -
HDD-1000(UC) ; #10601 -
HDD-1000(EK) ; #10618 -

## **AP-22** BOARD (4/5) Audio TR1 – TR4 PB Amplifier

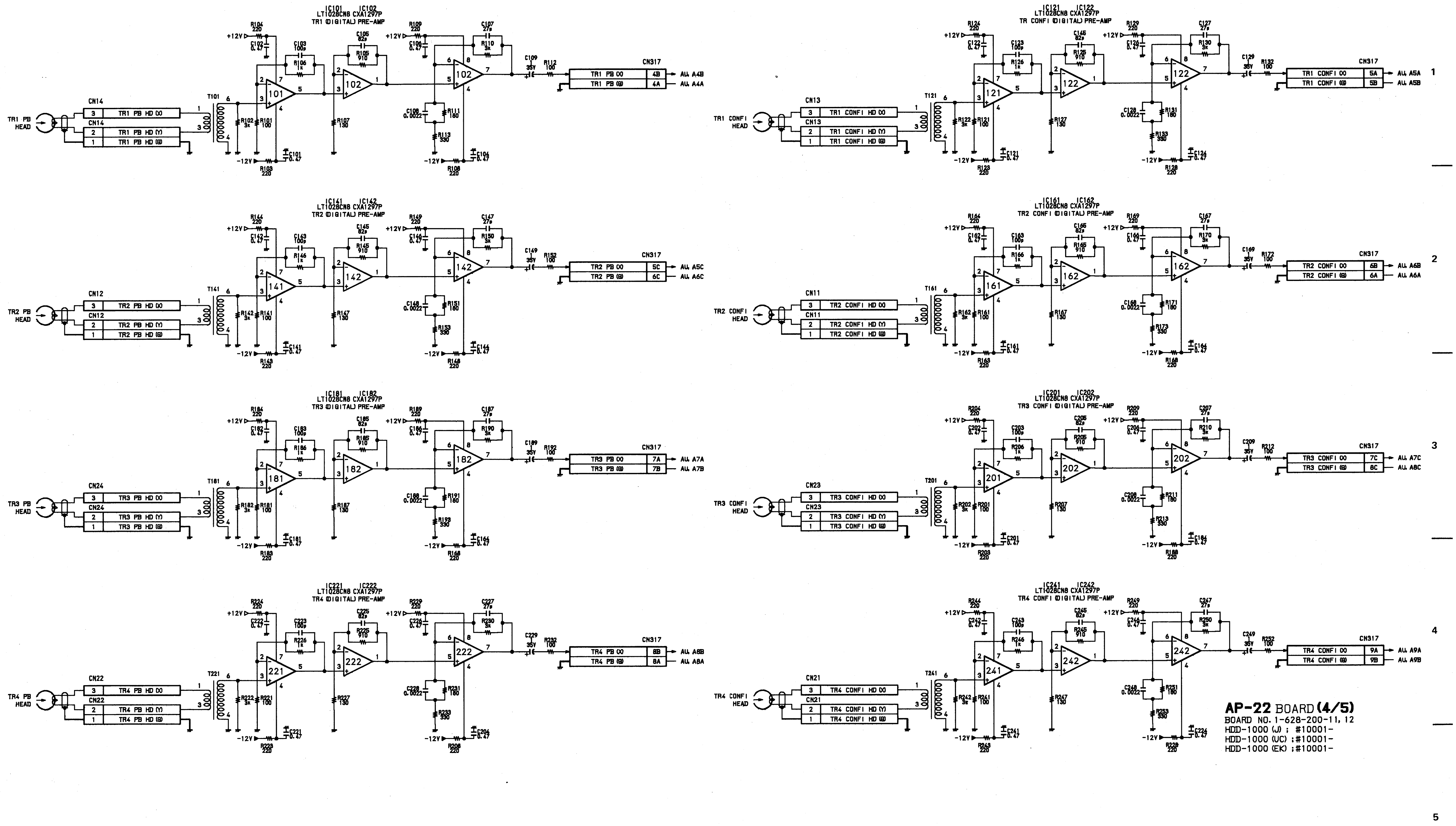
IC101 IC102
LT1028CN8 CXA1297P
TR1 (DIGITAL) PRE-AMP
IC121 IC122
LT1028CN8 CXA1297P
TR CONFI (DIGITAL) PRE-AMP
IC141 IC142
LT1028CN8 CXA1297P
TR2 (DIGITAL) PRE-AMP
IC161 IC162
LT1028CN8 CXA1297P
TR2 CONFI (DIGITAL) PRE-AMP
IC181 IC182
LT1028CN8 CXA1297P
TR3 (DIGITAL) PRE-AMP
IC201 IC202
LT1028CN8 CXA1297P
TR3 CONFI (DIGITAL) PRE-AMP
IC221 IC222
LT1028CN8 CXA1297P
TR4 (DIGITAL) PRE-AMP
IC241 IC242
LT1028CN8 CXA1297P
TR4 CONFI (DIGITAL) PRE-AMP
TR1 PB HEAD
CN14
TR1 PB HD (X)
TR1 PB HD (Y)
TR1 PB HD (G)
T101
CN317
TR1 PB (X) 4B AU. A4B
TR1 PB (G) 4A AU. A4A
TR1 CONFI HEAD
CN13
TR1 CONFI HD (X)
TR1 CONFI HD (Y)
TR1 CONFI HD (G)
T121
TR1 CONFI (X) 5A AU. A5A
TR1 CONFI (G) 5B AU. A5B
TR2 PB HEAD
CN12
TR2 PB HD (X)
TR2 PB HD (Y)
TR2 PB HD (G)
T141
TR2 PB (X) 5C AU. A5C
TR2 PB (G) 6C AU. A6C
TR2 CONFI HEAD
CN11
TR2 CONFI HD (X)
TR2 CONFI HD (Y)
TR2 CONFI HD (G)
T161
TR2 CONFI (X) 6B AU. A6B
TR2 CONFI (G) 6A AU. A6A
TR3 PB HEAD
CN24
TR3 PB HD (X)
TR3 PB HD (Y)
TR3 PB HD (G)
T181
TR3 PB (X) 7A AU. A7A
TR3 PB (G) 7B AU. A7B
TR3 CONFI HEAD
CN23
TR3 CONFI HD (X)
TR3 CONFI HD (Y)
TR3 CONFI HD (G)
T201
TR3 CONFI (X) 7C AU. A7C
TR3 CONFI (G) 8C AU. A8C
TR4 PB HEAD
CN22
TR4 PB HD (X)
TR4 PB HD (Y)
TR4 PB HD (G)
T221
TR4 PB (X) 8B AU. A8B
TR4 PB (G) 8A AU. A8A
TR4 CONFI HEAD
CN21
TR4 CONFI HD (X)
TR4 CONFI HD (Y)
TR4 CONFI HD (G)
T241
TR4 CONFI (X) 9A AU. A9A
TR4 CONFI (G) 9B AU. A9B
+12V
-12V
1
2
3
4
5

**AP-22** BOARD **(4/5)**
BOARD NO. 1-628-200-11, 12
HDD-1000 (J) ; #10001-
HDD-1000 (UC) ;#10001-
HDD-1000 (EK) ;#10001-

## **AP-22** **BOARD (5/5)** Audio TR5 – TR8 PB Amplifier

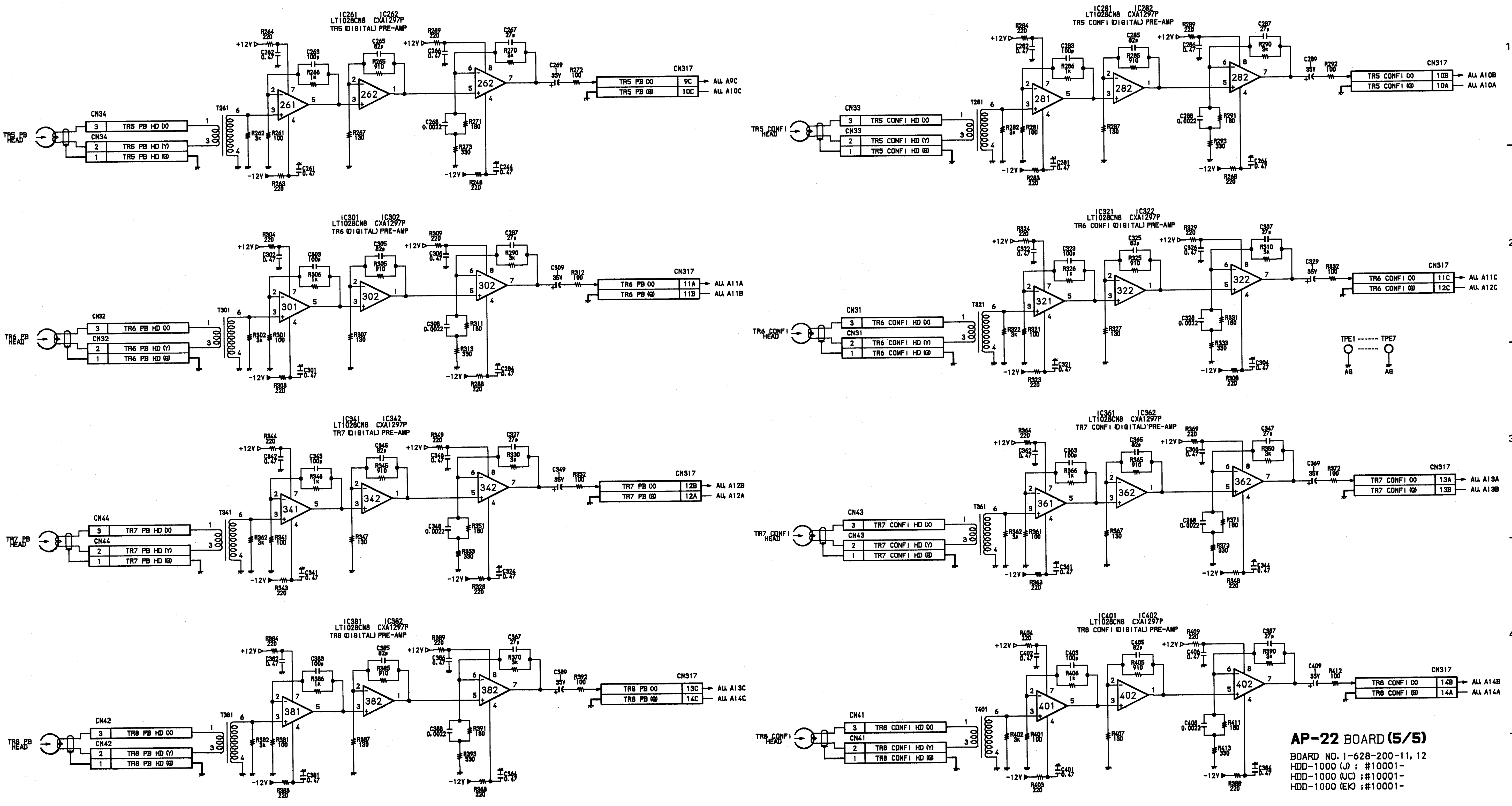
IC261 LT1028CN8 IC262 CXA1297P
TR5 (DIGITAL) PRE-AMP
TR5 PB HEAD
CN34
TR5 PB HD (X)
TR5 PB HD (Y)
TR5 PB HD (G)
T261
261
262
R264 220
C262 0.47
C263 100p
R266 1k
C265 82p
R265 910
R269 220
C266 0.47
C267 27p
R270 3k
R262 3k
R261 100
R267 130
C268 0.0022
R271 180
R273 330
R263 220
C261 0.47
R248 220
C244 0.47
C269 35V
R272 100
+12V
-12V
CN317
TR5 PB (X) 9C
TR5 PB (G) 10C
AU, A9C
AU, A10C
IC301 LT1028CN8 IC302 CXA1297P
TR6 (DIGITAL) PRE-AMP
TR6 PB HEAD
CN32
TR6 PB HD (X)
TR6 PB HD (Y)
TR6 PB HD (G)
T301
301
302
TR6 PB (X) 11A
TR6 PB (G) 11B
AU, A11A
AU, A11B
IC341 LT1028CN8 IC342 CXA1297P
TR7 (DIGITAL) PRE-AMP
TR7 PB HEAD
CN44
TR7 PB HD (X)
TR7 PB HD (Y)
TR7 PB HD (G)
T341
341
342
TR7 PB (X) 12B
TR7 PB (G) 12A
AU, A12B
AU, A12A
IC381 LT1028CN8 IC382 CXA1297P
TR8 (DIGITAL) PRE-AMP
TR8 PB HEAD
CN42
TR8 PB HD (X)
TR8 PB HD (Y)
TR8 PB HD (G)
T381
381
382
TR8 PB (X) 13C
TR8 PB (G) 14C
AU, A13C
AU, A14C
IC281 LT1028CN8 IC282 CXA1297P
TR5 CONFI (DIGITAL) PRE-AMP
TR5 CONFI HEAD
CN33
TR5 CONFI HD (X)
TR5 CONFI HD (Y)
TR5 CONFI HD (G)
T281
281
282
TR5 CONFI (X) 10B
TR5 CONFI (G) 10A
AU, A10B
AU, A10A
IC321 LT1028CN8 IC322 CXA1297P
TR6 CONFI (DIGITAL) PRE-AMP
TR6 CONFI HEAD
CN31
TR6 CONFI HD (X)
TR6 CONFI HD (Y)
TR6 CONFI HD (G)
T321
321
322
TR6 CONFI (X) 11C
TR6 CONFI (G) 12C
AU, A11C
AU, A12C
TPE1 ------ TPE7
AG
AG
IC361 LT1028CN8 IC362 CXA1297P
TR7 CONFI (DIGITAL) PRE-AMP
TR7 CONFI HEAD
CN43
TR7 CONFI HD (X)
TR7 CONFI HD (Y)
TR7 CONFI HD (G)
T361
361
362
TR7 CONFI (X) 13A
TR7 CONFI (G) 13B
AU, A13A
AU, A13B
IC401 LT1028CN8 IC402 CXA1297P
TR8 CONFI (DIGITAL) PRE-AMP
TR8 CONFI HEAD
CN41
TR8 CONFI HD (X)
TR8 CONFI HD (Y)
TR8 CONFI HD (G)
T401
401
402
TR8 CONFI (X) 14B
TR8 CONFI (G) 14A
AU, A14B
AU, A14A
1
2
3
4
5

**AP-22** BOARD **(5/5)**

BOARD NO. 1-628-200-11, 12
HDD-1000 (J) ; #10001-
HDD-1000 (UC) ;#10001-
HDD-1000 (EK) ;#10001-

**VR-74** **BOARD (1-628-213-11)**
Component Side

S/N up to 10199

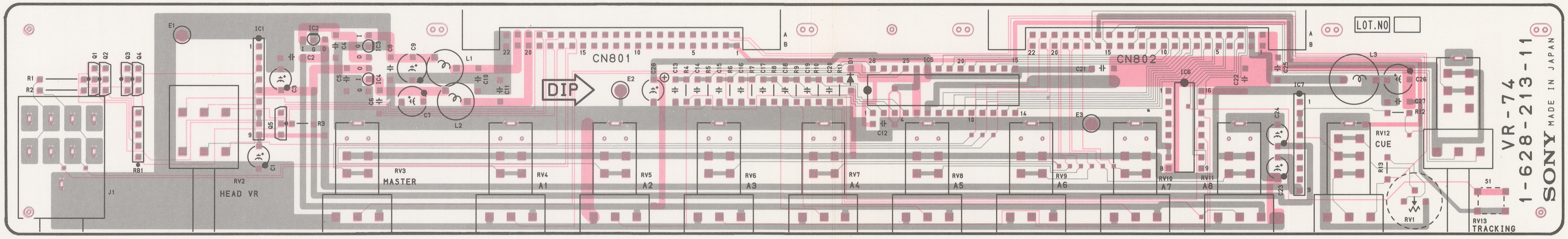
LOT.NO
E1
IC1
IC2
IC3
IC4
IC5
IC6
IC7
Q1
Q2
Q3
Q4
Q5
R1
R2
R3
RB1
J1
C1
C2
C3
C4
C5
C6
C7
C8
C9
C10
C11
L1
L2
L3
CN801
CN802
DIP
E2
E3
C28
C13
R4
C14
R5
C15
R6
C16
R7
C17
R8
C18
R9
C19
R10
C20
R11
D1
C12
C21
C22
C23
C24
C25
C26
C27
R12
R13
RV1
RV2
HEAD VR
RV3
MASTER
RV4
A1
RV5
A2
RV6
A3
RV7
A4
RV8
A5
RV9
A6
RV10
A7
RV11
A8
RV12
CUE
S1
RV13
TRACKING
VR-74
1-628-213-11
SONY MADE IN JAPAN

1-628-213-11 COMPONENT SIDE

1-628-213-11 SOLDER SIDE

**VR-74** **BOARD (1-628-213-12)**
Component Side

S/N 10201 and higher

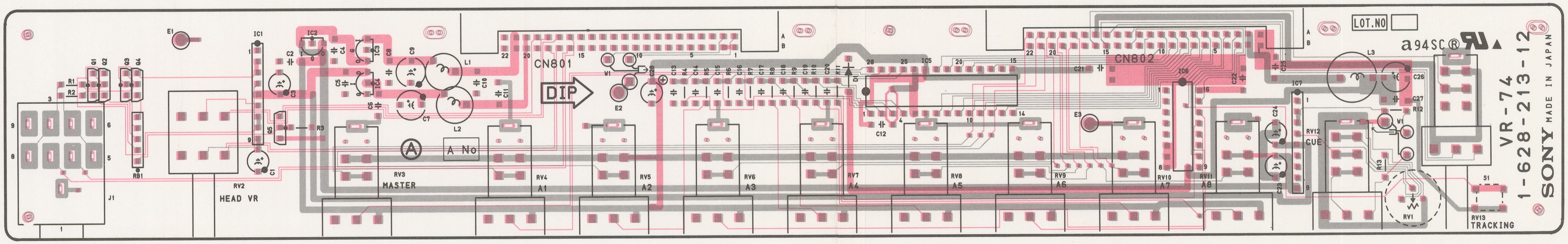
CN801
CN802
DIP
IC1
IC2
IC5
IC6
IC7
E1
E2
E3
J1
RB1
RV2
HEAD VR
RV3
MASTER
RV4
A1
RV5
A2
RV6
A3
RV7
A4
RV8
A5
RV9
A6
RV10
A7
RV11
A8
RV12
CUE
RV13
TRACKING
RV1
S1
L1
L2
L3
A No
LOT.NO
VR-74
1-628-213-12
SONY
MADE IN JAPAN

1-628-213-12 COMPONENT SIDE

1-628-213-12 SOLDER SIDE

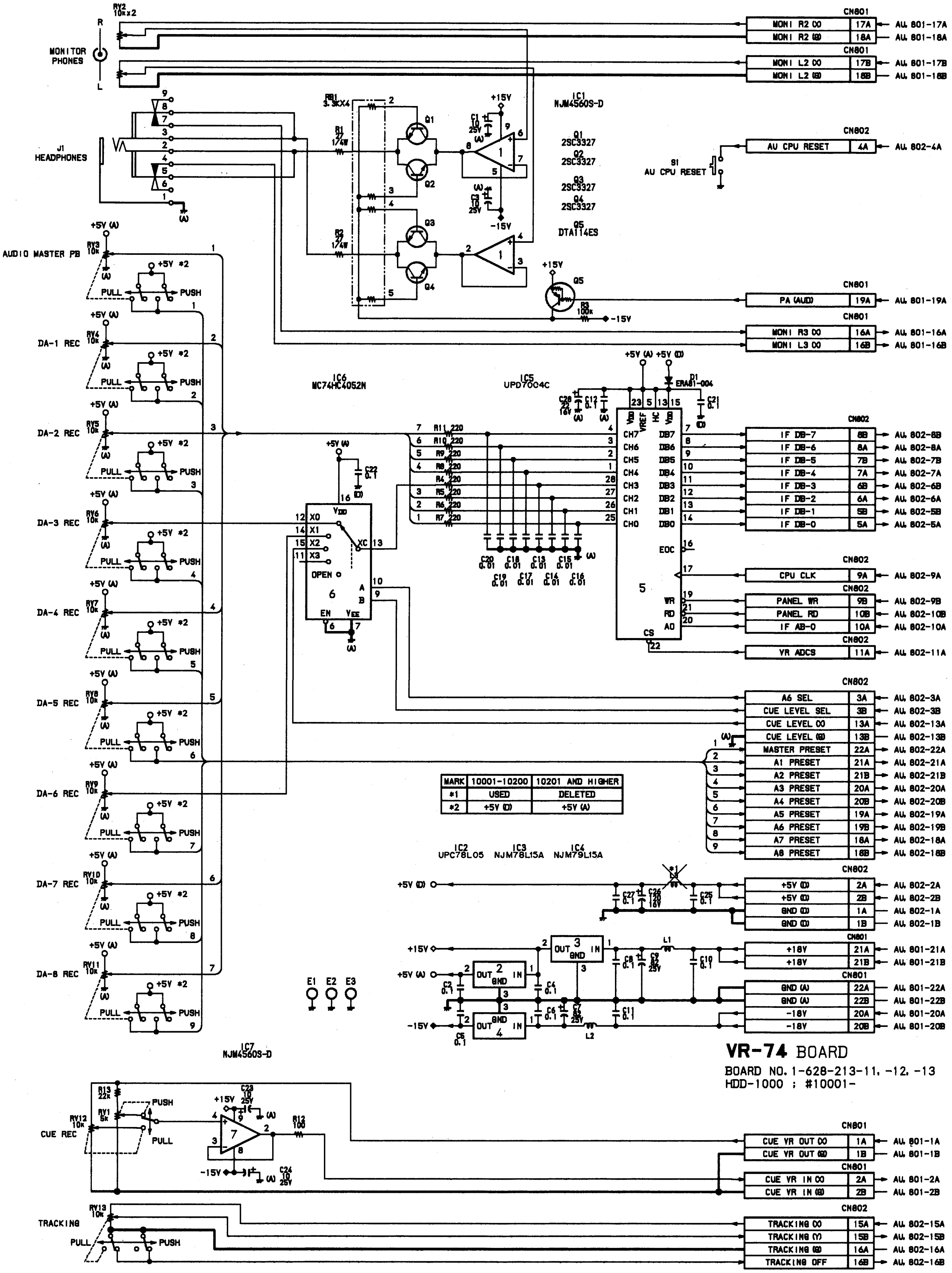
RV2 10k×2
MONITOR PHONES
R
L
J1 HEADPHONES
RB1 3.3K×4
R1 27 1/4W
R2 27 1/4W
Q1
Q2
Q3
Q4
Q5
+15V
-15V
C1 10 25V
C3 10 25V
IC1 NJM4560S-D
Q1 2SC3327
Q2 2SC3327
Q3 2SC3327
Q4 2SC3327
Q5 DTA114ES
R3 100k
S1 AU CPU RESET
CN801
MONI R2 (X) 17A AU 801-17A
MONI R2 (G) 18A AU 801-18A
MONI L2 (X) 17B AU 801-17B
MONI L2 (G) 18B AU 801-18B
CN802
AU CPU RESET 4A AU 802-4A
PA (AUD) 19A AU 801-19A
MONI R3 (X) 16A AU 801-16A
MONI L3 (X) 16B AU 801-16B
AUDIO MASTER PB RV3 10k
DA-1 REC RV4 10k
DA-2 REC RV5 10k
DA-3 REC RV6 10k
DA-4 REC RV7 10k
DA-5 REC RV8 10k
DA-6 REC RV9 10k
DA-7 REC RV10 10k
DA-8 REC RV11 10k
+5V (A)
+5V *2
PULL
PUSH
IC6 MC74HC4052N
IC5 UPD7004C
+5V (A) +5V (D)
D1 ERA81-004
C28 22 16V
C12 0.1
C21 0.1
C22 0.1
R11 220
R10 220
R9 220
R8 220
R4 220
R5 220
R6 220
R7 220
C20 0.01
C18 0.01
C13 0.01
C15 0.01
C19 0.01
C17 0.01
C14 0.01
C16 0.01
VDD VREF HC VDD
CH7 CH6 CH5 CH4 CH3 CH2 CH1 CH0
DB7 DB6 DB5 DB4 DB3 DB2 DB1 DB0
EOC
WR RD A0 CS
X0 X1 X2 X3 XC OPEN
VDD EN VEE A B
IF DB-7 8B AU 802-8B
IF DB-6 8A AU 802-8A
IF DB-5 7B AU 802-7B
IF DB-4 7A AU 802-7A
IF DB-3 6B AU 802-6B
IF DB-2 6A AU 802-6A
IF DB-1 5B AU 802-5B
IF DB-0 5A AU 802-5A
CPU CLK 9A AU 802-9A
PANEL WR 9B AU 802-9B
PANEL RD 10B AU 802-10B
IF AB-0 10A AU 802-10A
VR ADCS 11A AU 802-11A
A6 SEL 3A AU 802-3A
CUE LEVEL SEL 3B AU 802-3B
CUE LEVEL (X) 13A AU 802-13A
CUE LEVEL (G) 13B AU 802-13B
MASTER PRESET 22A AU 802-22A
A1 PRESET 21A AU 802-21A
A2 PRESET 21B AU 802-21B
A3 PRESET 20A AU 802-20A
A4 PRESET 20B AU 802-20B
A5 PRESET 19A AU 802-19A
A6 PRESET 19B AU 802-19B
A7 PRESET 18A AU 802-18A
A8 PRESET 18B AU 802-18B
IC2 UPC78L05
IC3 NJM78L15A
IC4 NJM79L15A
+5V (D)
C27 0.1
C26 120 16V
C25 0.1
+5V (D) 2A AU 802-2A
+5V (D) 2B AU 802-2B
GND (D) 1A AU 802-1A
GND (D) 1B AU 802-1B
+15V
+5V (A)
-15V
OUT IN GND
L1
L2
C8 0.1
C9 82 25V
C10 0.1
C2 0.1
C4 0.1
C6 0.1
C7 82 25V
C11 0.1
C5 0.1
+18V 21A AU 801-21A
+18V 21B AU 801-21B
GND (A) 22A AU 801-22A
GND (A) 22B AU 801-22B
-18V 20A AU 801-20A
-18V 20B AU 801-20B
E1 E2 E3
IC7 NJM4560S-D
CUE REC
RV12 10k
RV1 5k
R13 22k
C23 10 25V
C24 10 25V
R12 100
CUE VR OUT (X) 1A AU 801-1A
CUE VR OUT (G) 1B AU 801-1B
CUE VR IN (X) 2A AU 801-2A
CUE VR IN (G) 2B AU 801-2B
TRACKING
RV13 10k
TRACKING (X) 15A AU 802-15A
TRACKING (Y) 15B AU 802-15B
TRACKING (G) 16A AU 802-16A
TRACKING OFF 16B AU 802-16B
VR-74 BOARD
BOARD NO. 1-628-213-11, -12, -13
HDD-1000 ; #10001-

| MARK | 10001-10200 | 10201 AND HIGHER |
|---|---|---|
| *1 | USED | DELETED |
| *2 | +5V (D) | +5V (A) |

## **SW-269** BOARD (1-628-214-11)

Component Side

S/N up to 10506 (J)
S/N up to 10500 (UC)
S/N up to 10617 (EK)

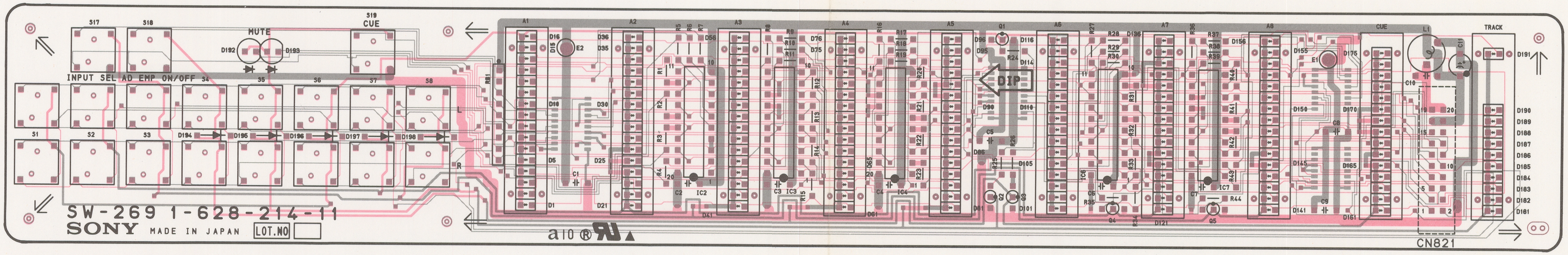
S17
S18
MUTE
D192
D193
S19
CUE
INPUT SEL
AD EMP
ON/OFF
S1
S2
S3
S4
S5
S6
S7
S8
D194
D195
D196
D197
D198
L
R
SW-269 1-628-214-11
SONY
MADE IN JAPAN
LOT.NO
A1
A2
A3
A4
A5
A6
A7
A8
CUE
TRACK
DIP
IC1
IC2
IC3
IC4
IC7
Q1
Q2
Q3
Q4
Q5
E1
E2
L1
C10
RB1
D191
D190
D189
D188
D187
D186
D185
D184
D183
D182
D181
CN821

1-628-214-11 COMPONENT SIDE

1-628-214-11 SOLDER SIDE

### SW-269 (1-628-214-11)

**HDD-1000**

| | | | | | | | | | | | |
|---|---|---|---|---|---|---|---|---|---|---|---|
| CN821 | L1 | D44 | E1 | D89 | G1 | D134 | J1 | D184 | M1 | S1 | A1 |
| | | D45 | E1 | D90 | G1 | D135 | J1 | D185 | M1 | S2 | A1 |
| D1 | C1 | D46 | E1 | D91 | G1 | D136 | J1 | D186 | M1 | S3 | A1 |
| D2 | C1 | D47 | E1 | D92 | G1 | D141 | K1 | D187 | M1 | S4 | A1 |
| D3 | C1 | D48 | E1 | D93 | G1 | D142 | K1 | D188 | M1 | S5 | B1 |
| D4 | C1 | D49 | E1 | D94 | G1 | D143 | K1 | D189 | M1 | S6 | B1 |
| D5 | C1 | D50 | E1 | D95 | G1 | D144 | K1 | D190 | M1 | S7 | B1 |
| D6 | C1 | D51 | E1 | D96 | G1 | D145 | K1 | D191 | M1 | S8 | B1 |
| D7 | C1 | D52 | E1 | D101 | H1 | D146 | K1 | D192 | B1 | S9 | A1 |
| D8 | C1 | D53 | E1 | D102 | H1 | D147 | K1 | D193 | B1 | S10 | A1 |
| D9 | C1 | D54 | E1 | D103 | H1 | D148 | K1 | D194 | A1 | S11 | A1 |
| D10 | C1 | D55 | E1 | D104 | H1 | D149 | K1 | D195 | B1 | S12 | A1 |
| D11 | C1 | D56 | E1 | D105 | H1 | D150 | K1 | D196 | B1 | S13 | B1 |
| D12 | C1 | D61 | F1 | D106 | H1 | D151 | K1 | D197 | B1 | S14 | B1 |
| D13 | C1 | D62 | F1 | D107 | H1 | D152 | K1 | D198 | B1 | S15 | B1 |
| D14 | C1 | D63 | F1 | D108 | H1 | D153 | K1 | | | S16 | B1 |
| D15 | C1 | D64 | F1 | D109 | H1 | D154 | K1 | E1 | K1 | S17 | A1 |
| D16 | C1 | D65 | F1 | D110 | H1 | D155 | K1 | E2 | D1 | S18 | A1 |
| D21 | D1 | D66 | F1 | D111 | H1 | D156 | K1 | | | S19 | B1 |
| D22 | D1 | D67 | F1 | D112 | H1 | D161 | L1 | IC1 | D1 | | |
| D23 | D1 | D68 | F1 | D113 | H1 | D162 | L1 | IC2 | E1 | | |
| D24 | D1 | D69 | F1 | D114 | H1 | D163 | L1 | IC3 | F1 | | |
| D25 | D1 | D70 | F1 | D115 | H1 | D164 | L1 | IC4 | G1 | | |
| D26 | D1 | D71 | F1 | D116 | H1 | D165 | L1 | IC5 | H1 | | |
| D27 | D1 | D72 | F1 | D121 | J1 | D166 | L1 | IC6 | H1 | | |
| D28 | D1 | D73 | F1 | D122 | J1 | D167 | L1 | IC7 | K1 | | |
| D29 | D1 | D74 | F1 | D123 | J1 | D168 | L1 | IC8 | K1 | | |
| D30 | D1 | D75 | F1 | D124 | J1 | D169 | L1 | IC9 | K1 | | |
| D31 | D1 | D76 | F1 | D125 | J1 | D170 | L1 | | | | |
| D32 | D1 | D81 | G1 | D126 | J1 | D171 | L1 | Q1 | G1 | | |
| D33 | D1 | D82 | G1 | D127 | J1 | D172 | L1 | Q2 | G1 | | |
| D34 | D1 | D83 | G1 | D128 | J1 | D173 | L1 | Q3 | H1 | | |
| D35 | D1 | D84 | G1 | D129 | J1 | D174 | L1 | Q4 | J1 | | |
| D36 | D1 | D85 | G1 | D130 | J1 | D175 | L1 | Q5 | J1 | | |
| D41 | E1 | D86 | G1 | D131 | J1 | D181 | M1 | | | | |
| D42 | E1 | D87 | G1 | D132 | J1 | D182 | M1 | RB1 | C1 | | |
| D43 | E1 | D88 | G1 | D133 | J1 | D183 | M1 | | | | |

**SW-269** **BLOCK (1-628-214-12)**
Component Side

S/N 10507 and higher (J)
S/N 10501 and higher (UC)
S/N 10618 and higher (EK)

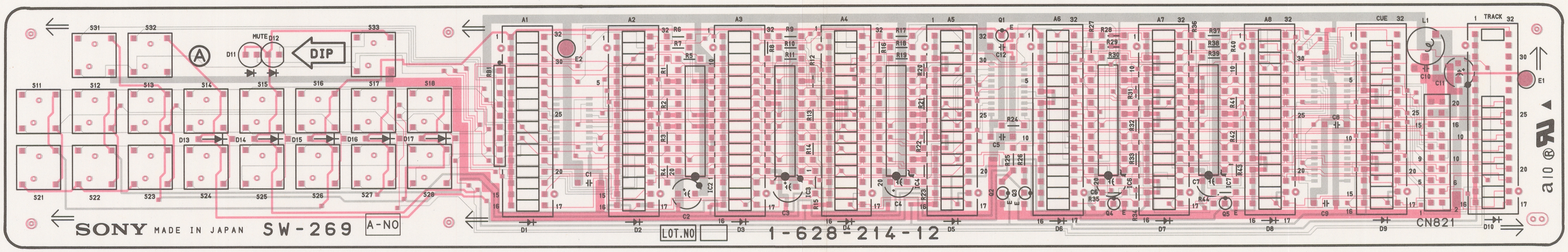
SONY MADE IN JAPAN
SW-269
A-NO
LOT.NO
1-628-214-12
DIP
MUTE
CUE
TRACK
CN821
S11
S12
S13
S14
S15
S16
S17
S18
S21
S22
S23
S24
S25
S26
S27
S28
S31
S32
S33
D1
D2
D3
D5
D6
D7
D8
D9
D10
D11
D12
D13
D14
D15
D16
D17
A1
A2
A3
A4
A5
A6
A7
A8
E1
E2
Q1
Q4
Q5
RB1
L1
C10
C11
C12
a10

1-628-214-12 COMPONENT SIDE

1-628-214-12 SOLDER SIDE

**SW-269 (1-628-214-12)**

**HDD-1000**

| | |
|---|---|
| D1 | C1 |
| D2 | D1 |
| D3 | E1 |
| D4 | F1 |
| D5 | G1 |
| D6 | H1 |
| D7 | J1 |
| D8 | K1 |
| D9 | L1 |
| D10 | M1 |
| D11 | B1 |
| D12 | B1 |
| D13 | A1 |
| D14 | B1 |
| D15 | B1 |
| D16 | B1 |
| D17 | B1 |
| | |
| E1 | M1 |
| E2 | D1 |
| | |
| IC1 | D1 |
| IC2 | E1 |
| IC3 | F1 |
| IC4 | G1 |
| IC5 | H1 |
| IC6 | H1 |
| IC7 | K1 |
| IC8 | K1 |
| IC9 | K1 |
| | |
| Q1 | G1 |
| Q2 | G1 |
| Q3 | H1 |
| Q4 | J1 |
| Q5 | J1 |
| | |
| RB1 | C1 |

| | |
|---|---|
| S11 | A1 |
| S12 | A1 |
| S13 | A1 |
| S14 | A1 |
| S15 | B1 |
| S16 | B1 |
| S17 | B1 |
| S18 | B1 |
| S21 | A1 |
| S22 | A1 |
| S23 | A1 |
| S24 | A1 |
| S25 | B1 |
| S26 | B1 |
| S27 | B1 |
| S28 | B1 |
| S31 | A1 |
| S32 | A1 |
| S33 | B1 |

## SW-269 BOARD

### Audio Monitor Select Key and Level Meter

S/N up to 10506 (J)
S/N up to 10500 (UC)
S/N up to 10617 (EK)

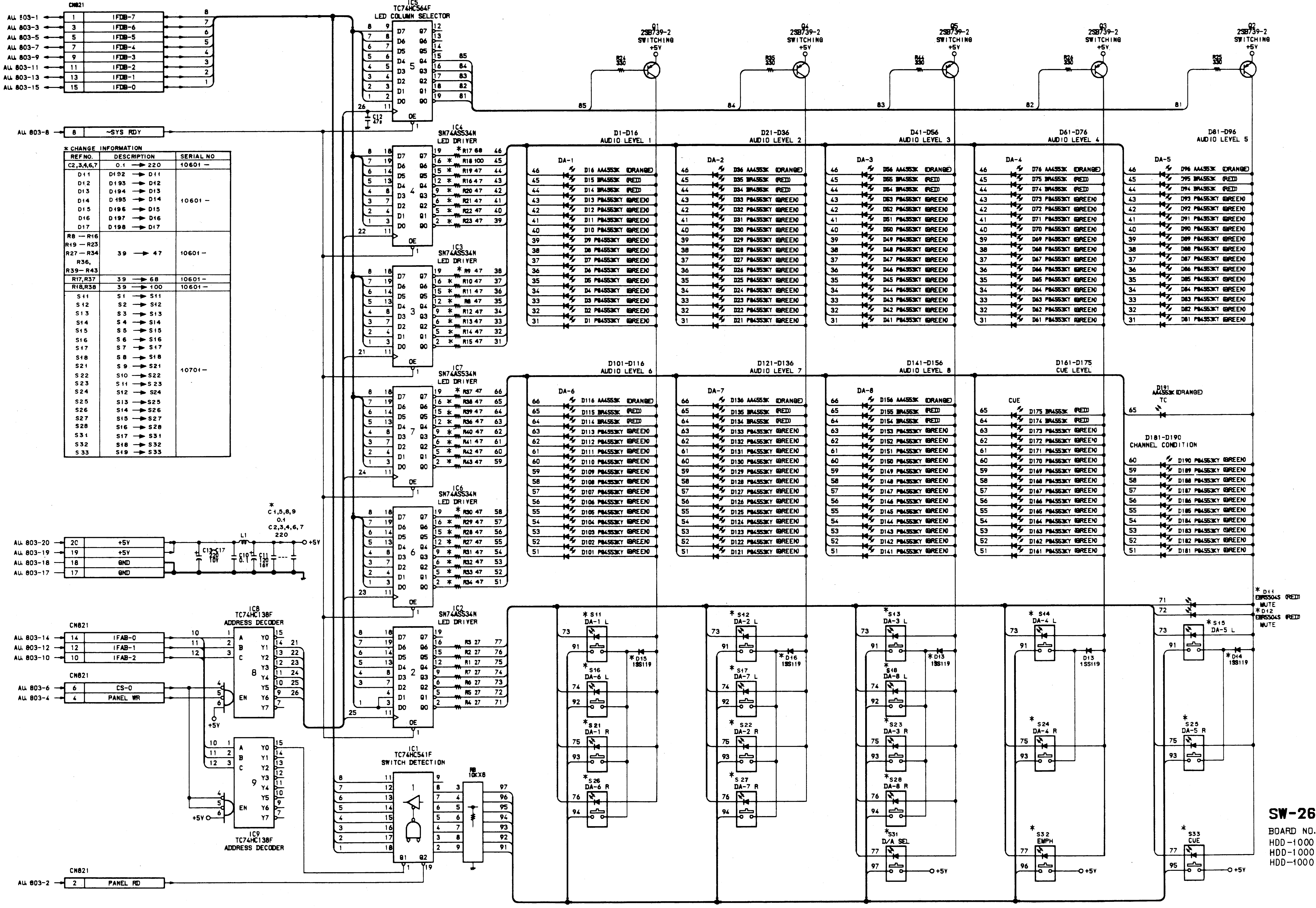
CN821
AU 803-1
AU 803-3
AU 803-5
AU 803-7
AU 803-9
AU 803-11
AU 803-13
AU 803-15
IFDB-7
IFDB-6
IFDB-5
IFDB-4
IFDB-3
IFDB-2
IFDB-1
IFDB-0
AU 803-8
~SYS RDY
IC5 TC74HC564F LED COLUMN SELECTOR
C12 47p
IC4 SN74AS534N LED DRIVER
IC3 SN74AS534N LED DRIVER
IC7 SN74AS534N LED DRIVER
IC6 SN74AS534N LED DRIVER
IC2 SN74AS534N LED DRIVER
Q1 2SB739-2 SWITCHING +5V
Q4 2SB739-2 SWITCHING +5V
Q5 2SB739-2 SWITCHING +5V
Q3 2SB739-2 SWITCHING +5V
Q2 2SB739-2 SWITCHING +5V
R24 330
R35 330
R44 330
R26 330
R25 330
D1-D16 AUDIO LEVEL 1
D21-D36 AUDIO LEVEL 2
D41-D56 AUDIO LEVEL 3
D61-D76 AUDIO LEVEL 4
D81-D96 AUDIO LEVEL 5
DA-1
DA-2
DA-3
DA-4
DA-5
D16 AA4553K (ORANGE)
D15 BR4553K (RED)
D14 BR4553K (RED)
D13 PG4553KY (GREEN)
D1 PG4553KY (GREEN)
D101-D116 AUDIO LEVEL 6
D121-D136 AUDIO LEVEL 7
D141-D156 AUDIO LEVEL 8
D161-D175 CUE LEVEL
DA-6
DA-7
DA-8
CUE
D175 BR4553K (RED)
D174 BR4553K (RED)
D191 AA4553K (ORANGE) TC
D181-D190 CHANNEL CONDITION
* D11 EBR5504S (RED) MUTE
* D12 EBR5504S (RED) MUTE
* C1,5,8,9 0.1 C2,3,4,6,7 220
L1
C13-C17 220 10V
C10 0.1
C11 120 16V
AU 803-20
AU 803-19
AU 803-18
AU 803-17
+5V
+5V
GND
GND
CN821
AU 803-14
AU 803-12
AU 803-10
IFAB-0
IFAB-1
IFAB-2
IC8 TC74HC138F ADDRESS DECODER
CN821
AU 803-6
AU 803-4
CS-0
PANEL WR
IC9 TC74HC138F ADDRESS DECODER
IC1 TC74HC541F SWITCH DETECTION
RB 10KX8
CN821
AU 803-2
PANEL RD
* S11 DA-1 L
* S16 DA-6 L
* S21 DA-1 R
* S26 DA-6 R
* D15 1SS119
* S12 DA-2 L
* S17 DA-7 L
* S22 DA-2 R
* S27 DA-7 R
* D16 1SS119
* S13 DA-3 L
* S18 DA-8 L
* S23 DA-3 R
* S28 DA-8 R
* S31 D/A SEL
* D13 1SS119
* S14 DA-4 L
* S24 DA-4 R
* S32 EMPH
D13 1SS119
* S15 DA-5 L
* S25 DA-5 R
* S33 CUE
* D14 1SS119
+5V

* CHANGE INFORMATION

| REF NO. | DESCRIPTION | SERIAL NO |
|---|---|---|
| C2,3,4,6,7 | 0.1 → 220 | 10601 – |
| D11<br>D12<br>D13<br>D14<br>D15<br>D16<br>D17 | D192 → D11<br>D193 → D12<br>D194 → D13<br>D195 → D14<br>D196 → D15<br>D197 → D16<br>D198 → D17 | 10601 – |
| R8 – R16<br>R19 – R23<br>R27 – R34<br>R36,<br>R39 – R43 | 39 → 47 | 10601 – |
| R17,R37 | 39 → 68 | 10601 – |
| R18,R38 | 39 → 100 | 10601 – |
| S11<br>S12<br>S13<br>S14<br>S15<br>S16<br>S17<br>S18<br>S21<br>S22<br>S23<br>S24<br>S25<br>S26<br>S27<br>S28<br>S31<br>S32<br>S33 | S1 → S11<br>S2 → S12<br>S3 → S13<br>S4 → S14<br>S5 → S15<br>S6 → S16<br>S7 → S17<br>S8 → S18<br>S9 → S21<br>S10 → S22<br>S11 → S23<br>S12 → S24<br>S13 → S25<br>S14 → S26<br>S15 → S27<br>S16 → S28<br>S17 → S31<br>S18 → S32<br>S19 → S33 | 10701 – |

**SW-269** BOARD
BOARD NO. 1-628-214-11
HDD-1000(J) ;#10001-10506
HDD-1000(UC) :#10001-10500
HDD-1000(EK) ;#10001-10617

1
2
3
4
5

A
B
C
D
E
F
G
H

## SW-269 BOARD

Audio Monitor Select Key and Level Meter

S/N 10507 and higher (J)
S/N 10501 and higher (UC)
S/N 10618 and higher (EK)

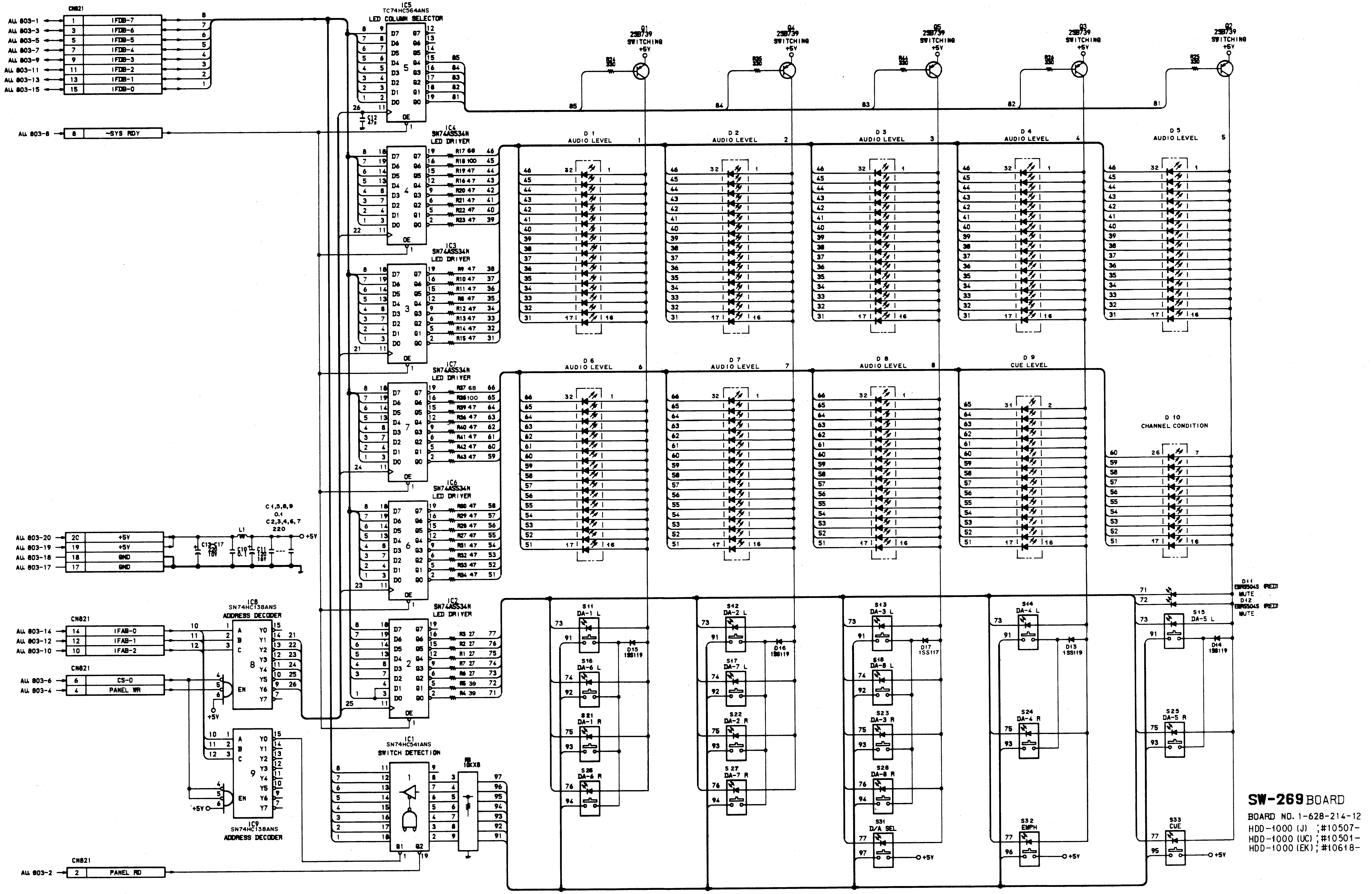
CN821
IC5
TC74HC564ANS
LED COLUMN SELECTOR
IC4
SN74AS534N
LED DRIVER
IC3
SN74AS534N
LED DRIVER
IC7
SN74AS534N
LED DRIVER
IC6
SN74AS534N
LED DRIVER
IC2
SN74AS534N
LED DRIVER
IC8
SN74HC138ANS
ADDRESS DECODER
IC9
SN74HC138ANS
ADDRESS DECODER
IC1
SN74HC541ANS
SWITCH DETECTION
Q1 Q2 Q3 Q4 Q5
2SB739
SWITCHING
+5V
D1 AUDIO LEVEL
D2 AUDIO LEVEL
D3 AUDIO LEVEL
D4 AUDIO LEVEL
D5 AUDIO LEVEL
D6 AUDIO LEVEL
D7 AUDIO LEVEL
D8 AUDIO LEVEL
D9 CUE LEVEL
D10 CHANNEL CONDITION
D11 MUTE
D12 MUTE
S11 DA-1 L
S16 DA-6 L
S21 DA-1 R
S26 DA-6 R
S12 DA-2 L
S17 DA-7 L
S22 DA-2 R
S27 DA-7 R
S13 DA-3 L
S18 DA-8 L
S23 DA-3 R
S28 DA-8 R
S31 D/A SEL
S14 DA-4 L
S24 DA-4 R
S32 EMPH
S15 DA-5 L
S25 DA-5 R
S33 CUE
D13 D14 D15 D16 D17
1SS119
RB 10K×8
L1
C1,5,8,9 0.1
C2,3,4,6,7 220
IFDB-7
IFDB-6
IFDB-5
IFDB-4
IFDB-3
IFDB-2
IFDB-1
IFDB-0
~SYS RDY
+5V
GND
IFAB-0
IFAB-1
IFAB-2
CS-0
PANEL WR
PANEL RD

**SW-269** BOARD
BOARD NO. 1-628-214-12
HDD-1000 (J) ; #10507-
HDD-1000 (UC) ; #10501-
HDD-1000 (EK) ; #10618-

B-167 (b)

B-168 (b)

## **CD-37** BOARD (1-628-208-11, 12)

Component Side

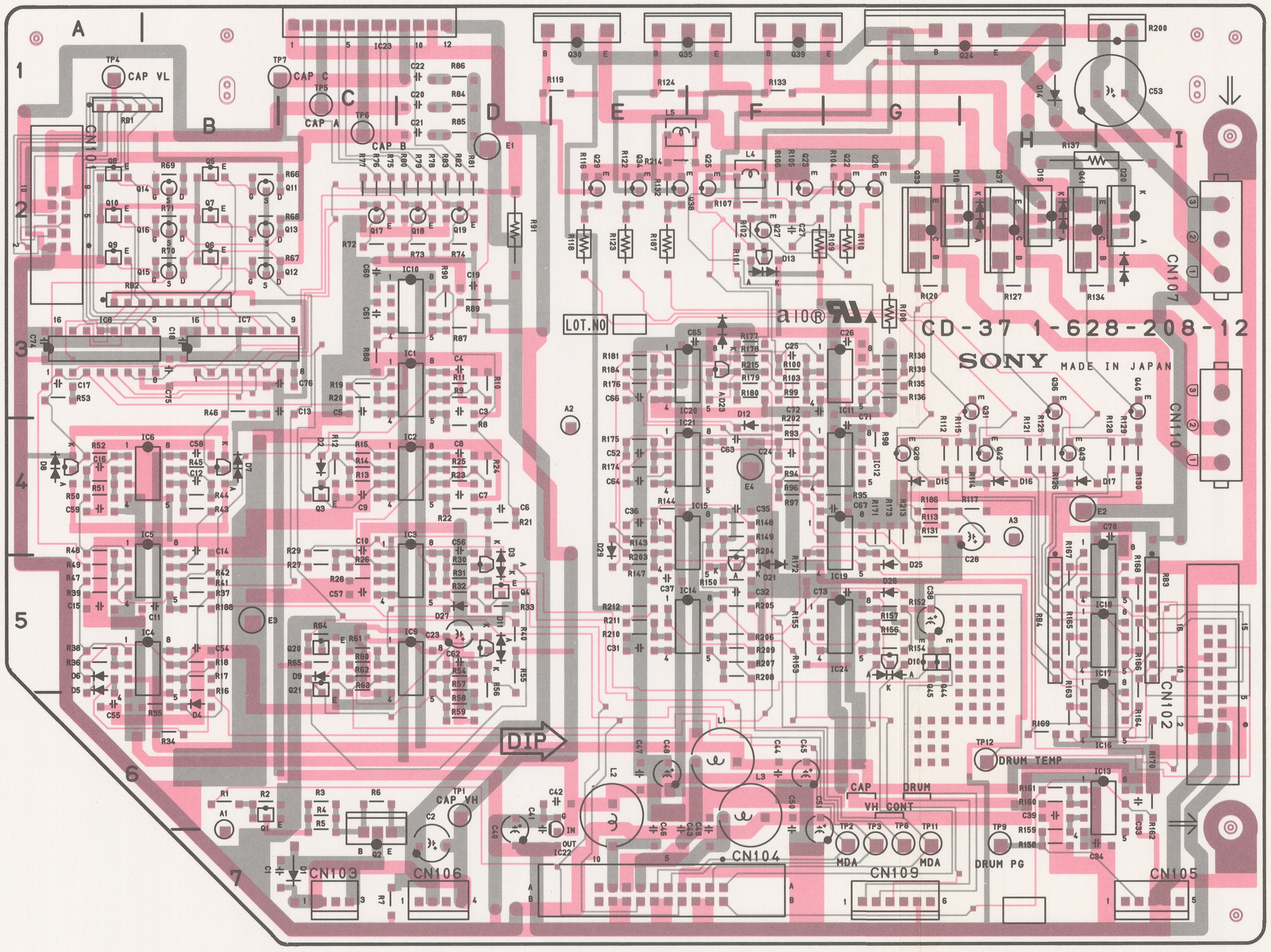
A
B
C
D
E
F
G
H
I
1
2
3
4
5
6
7
CAP VL
CAP C
CAP A
CAP B
CN101
CN102
CN103
CN104
CN105
CN106
CN107
CN109
CN110
CD-37 1-628-208-12
SONY
MADE IN JAPAN
LOT.NO
DIP
DRUM TEMP
CAP
DRUM
VH CONT
MDA
MDA
DRUM PG
CAP VH
IN
OUT

1-628-208-12 COMPONENT SIDE

1-628-208-12 SOLDER SIDE

**CD-37 (1-628-208-12)**

**HDD-1000**

| | |
|---|---|
| CN101 | A2 |
| CN102 | I6 |
| CN103 | C7 |
| CN104 | F7 |
| CN105 | I7 |
| CN106 | D7 |
| CN107 | I2 |
| CN109 | G7 |
| CN110 | I4 |
| D1 | C7 |
| D2 | C4 |
| D3 | D5 |
| D4 | B6 |
| D5 | A5 |
| D6 | A5 |
| D7 | B4 |
| D8 | A4 |
| D9 | C5 |
| D10 | G5 |
| D11 | D5 |
| D12 | F3 |
| D13 | F2 |
| D14 | H1 |
| D15 | G4 |
| D16 | H4 |
| D17 | I4 |
| D18 | G2 |
| D19 | H2 |
| D20 | I2 |
| D21 | F5 |
| D23 | F3 |
| D25 | G5 |
| D26 | G5 |
| D27 | D5 |
| D29 | E4 |
| E1 | D2 |
| E2 | I4 |
| E3 | B5 |
| E4 | F4 |
| IC1 | D3 |
| IC2 | D4 |
| IC3 | D4 |
| IC4 | B5 |
| IC5 | B4 |
| IC6 | B4 |
| IC7 | B3 |
| IC8 | A3 |
| IC9 | D5 |
| IC10 | D2 |
| IC11 | G3 |
| IC12 | G4 |
| IC13 | I6 |
| IC14 | E5 |
| IC15 | F4 |
| IC16 | I6 |
| IC17 | I5 |
| IC18 | I5 |
| IC19 | G5 |
| IC20 | E3 |
| IC21 | E4 |
| IC22 | E7 |
| IC23 | C1 |
| IC24 | G5 |
| Q1 | B6 |
| Q2 | C7 |
| Q3 | C4 |
| Q4 | D5 |
| Q5 | B2 |
| Q6 | B2 |
| Q7 | B2 |
| Q8 | A2 |
| Q9 | A2 |
| Q10 | A2 |
| Q11 | C2 |
| Q12 | C2 |
| Q13 | C2 |
| Q14 | B2 |
| Q15 | B2 |
| Q16 | B2 |
| Q17 | C2 |
| Q18 | D2 |
| Q19 | D2 |
| Q20 | C5 |
| Q21 | C5 |
| Q22 | G2 |
| Q23 | F2 |
| Q24 | H1 |
| Q25 | F2 |
| Q26 | G2 |
| Q27 | F2 |
| Q28 | G4 |
| Q29 | E2 |
| Q30 | E1 |
| Q31 | H3 |
| Q33 | G2 |
| Q34 | E2 |
| Q35 | E1 |
| Q36 | H3 |
| Q37 | H2 |
| Q38 | F2 |
| Q39 | F1 |
| Q40 | I3 |
| Q41 | H2 |
| Q42 | H4 |
| Q43 | H4 |
| Q44 | G5 |
| Q45 | G5 |
| RB1 | A1 |
| RB2 | A3 |
| RB3 | I5 |
| RB4 | H5 |
| TP1 | D6 |
| TP2 | G6 |
| TP3 | G6 |
| TP4 | A1 |
| TP5 | C1 |
| TP6 | C1 |
| TP7 | C1 |
| TP8 | G6 |
| TP9 | H7 |
| TP11 | G6 |
| TP12 | H6 |
| TP12 | H6 |

## **CD-37** **BOARD** Capstan Motor/Drum Motor Drive Amplifier

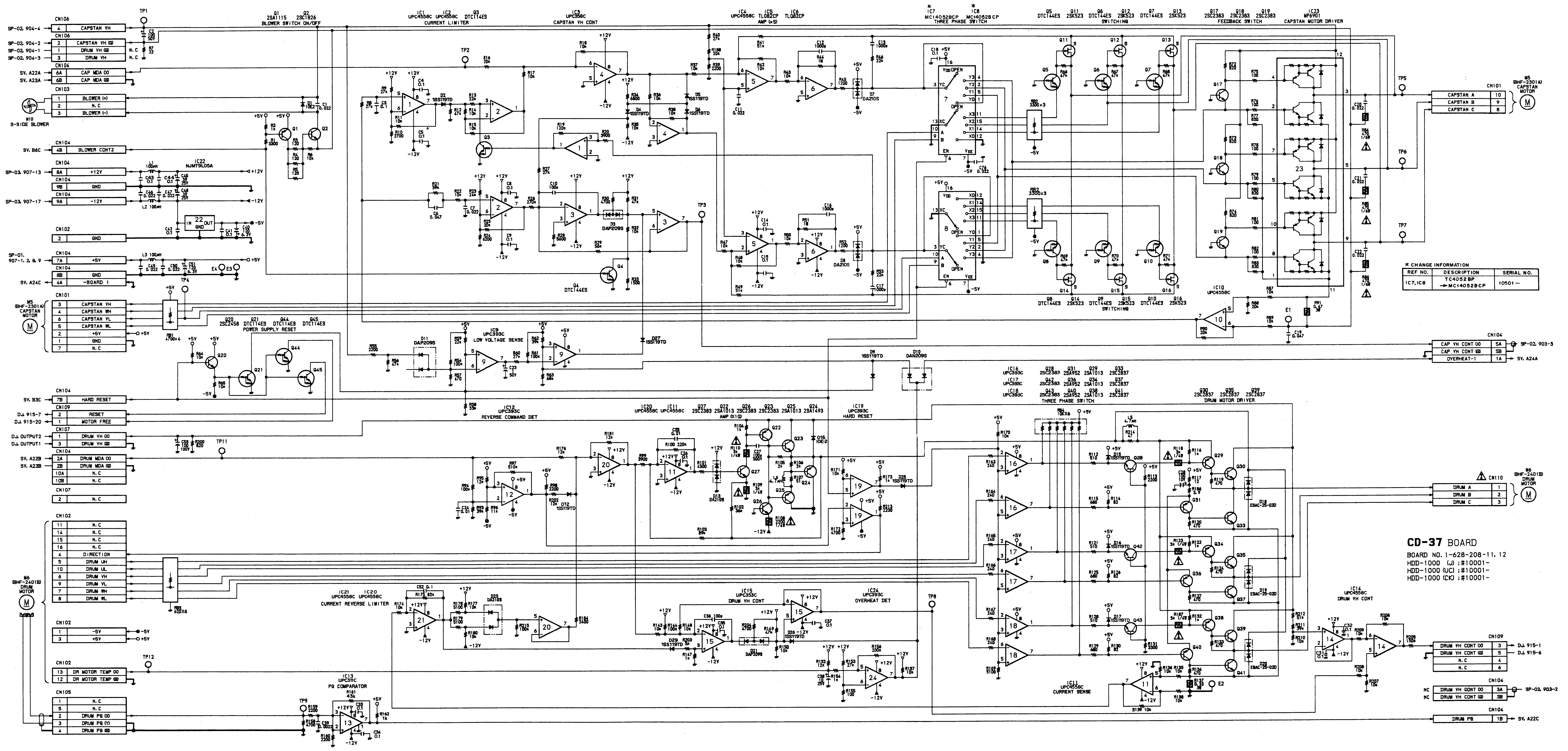
Q1 2SA1115 Q2 2SC1826 BLOWER SWITCH ON/OFF
IC1 UPC4558C IC2 UPC4558C Q3 DTC114ES CURRENT LIMITER
IC3 UPC358C CAPSTAN VH CONT
IC4 UPC4558C IC5 TL082CP IC6 TL082CP AMP (×5)
IC7 MC14052BCP IC8 MC14052BCP THREE PHASE SWITCH
Q5 DTC144ES Q11 2SK523 Q6 DTC144ES Q12 2SK523 Q7 DTC144ES Q13 2SK523 SWITCHING
Q17 2SC2383 Q18 2SC2383 Q19 2SC2383 FEEDBACK SWITCH
IC23 MP6901 CAPSTAN MOTOR DRIVER
Q8 DTC144ES Q14 2SK523 Q9 DTC144ES Q15 2SK523 Q10 DTC144ES Q16 2SK523 SWITCHING
IC10 UPC4558C
IC9 UPC393C LOW VOLTAGE SENSE
Q20 2SC2458 Q21 DTC114ES Q44 DTC114ES Q45 DTC114ES POWER SUPPLY RESET
IC12 UPC393C REVERSE COMMAND DET
IC20 UPC4558C IC11 UPC4558C AMP DX10
IC19 UPC393C HARD RESET
IC16 UPC393C IC17 UPC393C IC18 UPC393C THREE PHASE SWITCH
IC21 UPC4558C IC20 UPC4558C CURRENT REVERSE LIMITER
IC15 UPC353C DRUM VH CONT
IC24 UPC393C OVERHEAT DET
IC13 UPC311C PG COMPARATOR
IC11 UPC4558C CURRENT SENSE
IC14 UPC4558C DRUM VH CONT
M10 S-SIDE BLOWER
M5 BHF-2301A CAPSTAN MOTOR
M6 BHF-2401B DRUM MOTOR
TP1 TP2 TP3 TP4 TP5 TP6 TP7 TP8 TP9 TP11 TP12

**✱ CHANGE INFORMATION**

| REF NO. | DESCRIPTION | SERIAL NO. |
|---|---|---|
| IC7, IC8 | TC4052BP<br>→MC14052BCP | 10501— |

**CD-37** BOARD

BOARD NO. 1-628-208-11, 12
HDD-1000 (J) ;#10001-
HDD-1000 (UC) ;#10001-
HDD-1000 (CK) ;#10001-

## **RM-43** BOARD (1-621-110-12)

Component Side

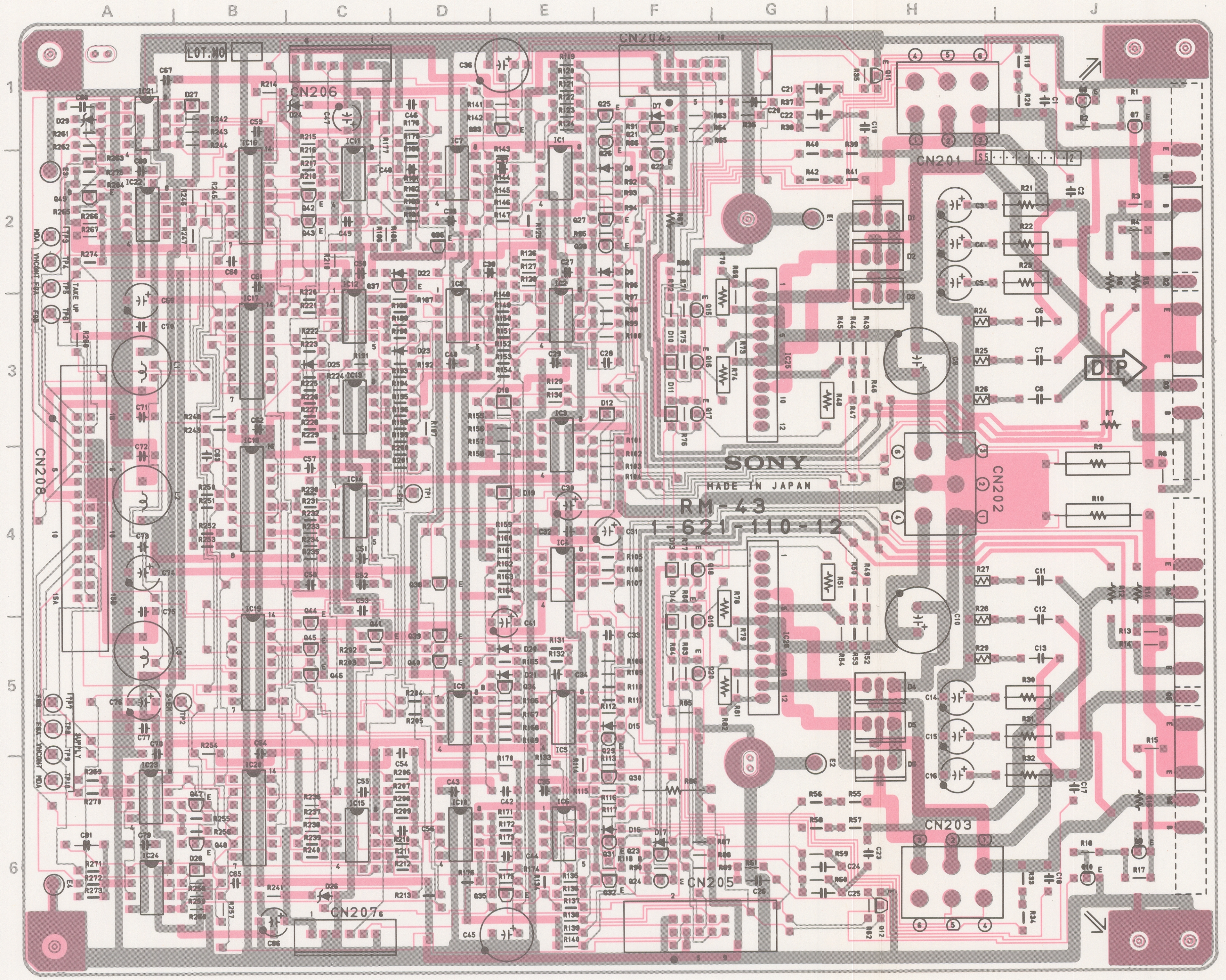
A
B
C
D
E
F
G
H
J
1
2
3
4
5
6
CN201
CN202
CN203
CN204
CN205
CN206
CN207
CN208
LOT.NO
DIP
SONY
MADE IN JAPAN
RM-43
1-621-110-12

1-621-110-12 COMPONENT SIDE

1-621-110-12 SOLDER SIDE

**RM-43 (1-621-110-12)**

**HDD-1000**

| | |
|---|---|
| CN201 | G1 |
| CN202 | G3 |
| CN203 | G6 |
| CN204 | E1 |
| CN205 | E6 |
| CN206 | C6 |
| CN207 | C6 |
| CN208 | A3 |
| D1 | F2 |
| D2 | F2 |
| D3 | F2 |
| D4 | F5 |
| D5 | F5 |
| D6 | F5 |
| D7 | E1 |
| D8 | E1 |
| D9 | E2 |
| D10 | E2 |
| D11 | E3 |
| D12 | D3 |
| D13 | E4 |
| D14 | E4 |
| D15 | E5 |
| D16 | E6 |
| D17 | E6 |
| D18 | D3 |
| D19 | D3 |
| D20 | D5 |
| D21 | D5 |
| D22 | C2 |
| D23 | C3 |
| D24 | B1 |
| D25 | C3 |
| D26 | C6 |
| D27 | B1 |
| D28 | B6 |
| D29 | A1 |
| E1 | F2 |
| E2 | F5 |
| E3 | A1 |
| E4 | A6 |
| IC1 | D1 |
| IC2 | D2 |
| IC3 | D3 |
| IC4 | D4 |
| IC5 | D5 |
| IC6 | D6 |
| IC7 | C1 |
| IC8 | C2 |
| IC9 | C5 |
| IC10 | C6 |
| IC11 | C1 |
| IC12 | C2 |
| IC13 | C3 |
| IC14 | C3 |
| IC15 | C6 |
| IC16 | B1 |
| IC17 | B2 |
| IC18 | B3 |
| IC19 | B4 |
| IC20 | B5 |
| IC21 | A1 |
| IC22 | A1 |
| IC23 | A5 |
| IC24 | A6 |
| IC25 | F3 |
| IC26 | F4 |
| Q1 | H1 |
| Q2 | H2 |
| Q3 | H3 |
| Q4 | H4 |
| Q5 | H5 |
| Q6 | H6 |
| Q7 | H1 |
| Q8 | H1 |
| Q9 | H6 |
| Q10 | H6 |
| Q11 | F1 |
| Q12 | F6 |
| Q15 | E2 |
| Q16 | E3 |
| Q17 | E3 |
| Q18 | E4 |
| Q19 | E4 |
| Q20 | E5 |
| Q21 | E1 |
| Q22 | E1 |
| Q23 | E6 |
| Q24 | E6 |
| Q25 | D1 |
| Q26 | D1 |
| Q27 | D2 |
| Q28 | D2 |
| Q29 | D5 |
| Q30 | E5 |
| Q31 | D6 |
| Q32 | D6 |
| Q33 | D1 |
| Q34 | D5 |
| Q35 | D6 |
| Q36 | C2 |
| Q37 | C2 |
| Q38 | C4 |
| Q39 | C4 |
| Q40 | C5 |
| Q41 | C4 |
| Q42 | B2 |
| Q43 | B2 |
| Q44 | B4 |
| Q45 | B4 |
| Q46 | C5 |
| Q47 | B5 |
| Q48 | B6 |
| Q49 | A2 |
| TP1 | C3 |
| TP2 | B5 |
| TP3 | A2 |
| TP4 | A2 |
| TP5 | A2 |
| TP6 | A2 |
| TP7 | A5 |
| TP8 | A5 |
| TP9 | A5 |
| TP10 | A5 |

## RM-43 BOARD WAVEFORMS

PLAYER MODE : PLAY
OSCILLOSCOPE : TEKTRONIX 2465
VERTICAL : indicated on the photo itself
HORIZONTAL : indicated on the photo itself
FREQUENCY RESPONSE : 300 MHz or 20 MHz

①

CN204-10

CN204-8

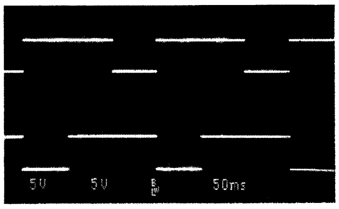

②

CN204-10

CN204-9

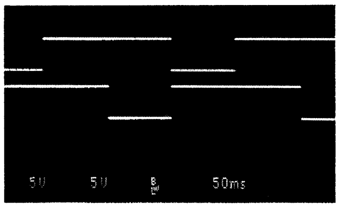

③

CN206-4

CN206-5

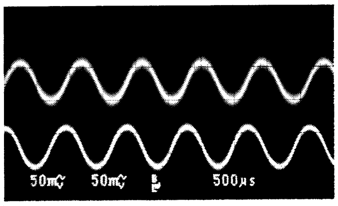

④

TP5

TP6

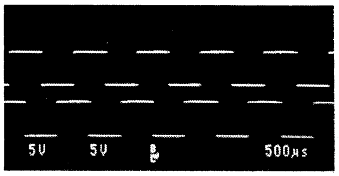

**RM-43 BOARD** Reel Motor Drive Amp

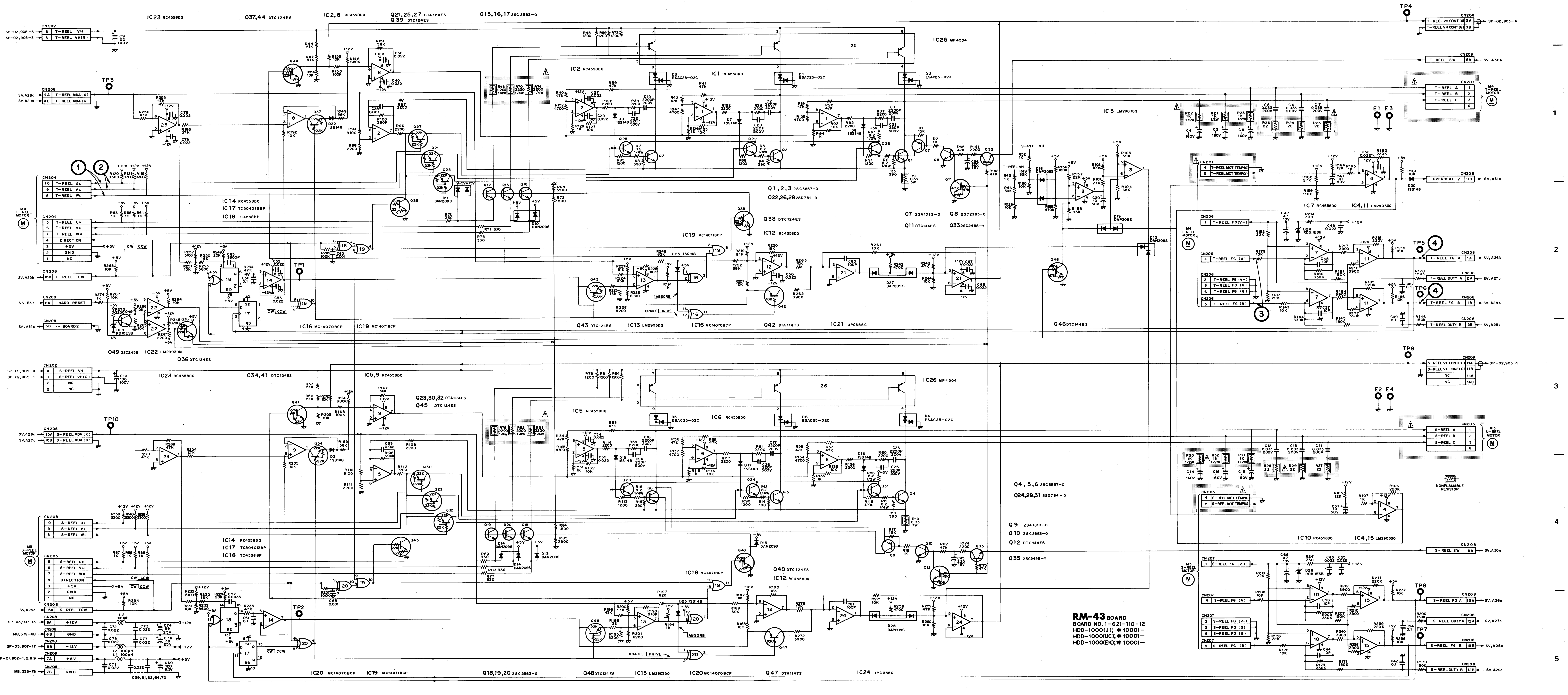
IC23 RC4558DQ
Q37,44 DTC124ES
IC2,8 RC4558DQ
Q21,25,27 DTA124ES
Q39 DTC124ES
Q15,16,17 2SC2383-O
IC25 MP4504
IC2 RC4558DQ
IC1 RC4558DQ
IC3 LM2903DQ
IC14 RC4558DQ
IC17 TC5040138P
IC18 TC4538BP
IC19 MC14071BCP
IC12 RC4558DQ
Q38 DTC124ES
Q1,2,3 2SC3857-O
Q22,26,28 2SD734-O
Q7 2SA1013-O
Q8 2SC2383-O
Q11 DTC144ES
Q33 2SC2458-Y
IC7 RC4558DQ
IC4,11 LM2903DQ
IC16 MC14070BCP
IC19 MC14071BCP
Q43 DTC124ES
IC13 LM2903DQ
IC16 MC14070BCP
Q42 DTA114TS
IC21 UPC358C
Q46 DTC144ES
Q49 2SC2458
IC22 LM2903DM
Q36 DTC124ES
IC23 RC4558DQ
Q34,41 DTC124ES
IC5,9 RC4558DQ
IC26 MP4504
Q23,30,32 DTA124ES
Q45 DTC124ES
IC5 RC4558DQ
IC6 RC4558DQ
Q4,5,6 2SC3857-O
Q24,29,31 2SD734-O
Q9 2SA1013-O
Q10 2SC2383-O
Q12 DTC144ES
Q35 2SC2458-Y
IC10 RC4558DQ
IC4,15 LM2903DQ
IC19 MC14071BCP
Q40 DTC124ES
IC12 RC4558DQ
IC20 MC14070BCP
IC19 MC14071BCP
Q18,19,20 2SC2383-O
Q48 DTC124ES
IC13 LM2903DQ
IC20 MC14070BCP
Q47 DTA114TS
IC24 UPC358C
CN202 T-REEL VH
T-REEL VH(G)
CN208 T-REEL MDA(X)
T-REEL MDA(G)
CN204 T-REEL UL
T-REEL VL
T-REEL WL
M4 T-REEL MOTOR
T-REEL UH
T-REEL VH
T-REEL WH
DIRECTION
+5V
GND
NC
T-REEL TCW
HARD RESET
~ BOARD2
CW CCW
ABSORB
BRAKE DRIVE
T-REEL VH CONT(X)
T-REEL VH CONT(G)
T-REEL SW
T-REEL A
T-REEL B
T-REEL C
T-REEL MOT TEMP(X)
T-REEL MOT TEMP(G)
OVERHEAT-2
T-REEL FG(V+)
T-REEL FG (A)
T-REEL FG (V-)
T-REEL FG (G)
T-REEL FG (B)
T-REEL FG A
T-REEL DUTY A
T-REEL FG B
T-REEL DUTY B
CN202 S-REEL VH
S-REEL VH(G)
CN208 S-REEL MDA(X)
S-REEL MDA(G)
CN205 S-REEL UL
S-REEL VL
S-REEL WL
M3 S-REEL MOTOR
S-REEL UH
S-REEL VH
S-REEL WH
S-REEL TCW
S-REEL VH CONT(X)
S-REEL VH CONT(G)
S-REEL SW
S-REEL A
S-REEL B
S-REEL C
S-REEL MOT TEMP(X)
S-REEL MOT TEMP(G)
S-REEL FG (V+)
S-REEL FG (A)
S-REEL FG (V-)
S-REEL FG (G)
S-REEL FG (B)
S-REEL FG A
S-REEL DUTY A
S-REEL FG B
S-REEL DUTY B
NONFLAMABLE RESISTOR
TP1
TP2
TP3
TP4
TP5
TP6
TP7
TP8
TP9
TP10
E1
E2
E3
E4
SP-02,905-5
SP-02,905-3
SP-02,903-4
SP-02,903-5
SP-02,905-4
SP-02,905-1
SP-03,907-13
MB,332-6B
SP-03,907-17
SP-01,902-1,2,8,9
MB,332-7B
C59,61,62,64,70
1
2
3
4
5
A
B
C
D
E
F
G
H
I
J
K
L

**RM-43** BOARD
BOARD NO. 1-621-110-12
HDD-1000(J); #10001-
HDD-1000(UC); #10001-
HDD-1000(EK); #10001-

## DS-19 BOARD (1-621-117-13)

Component Side

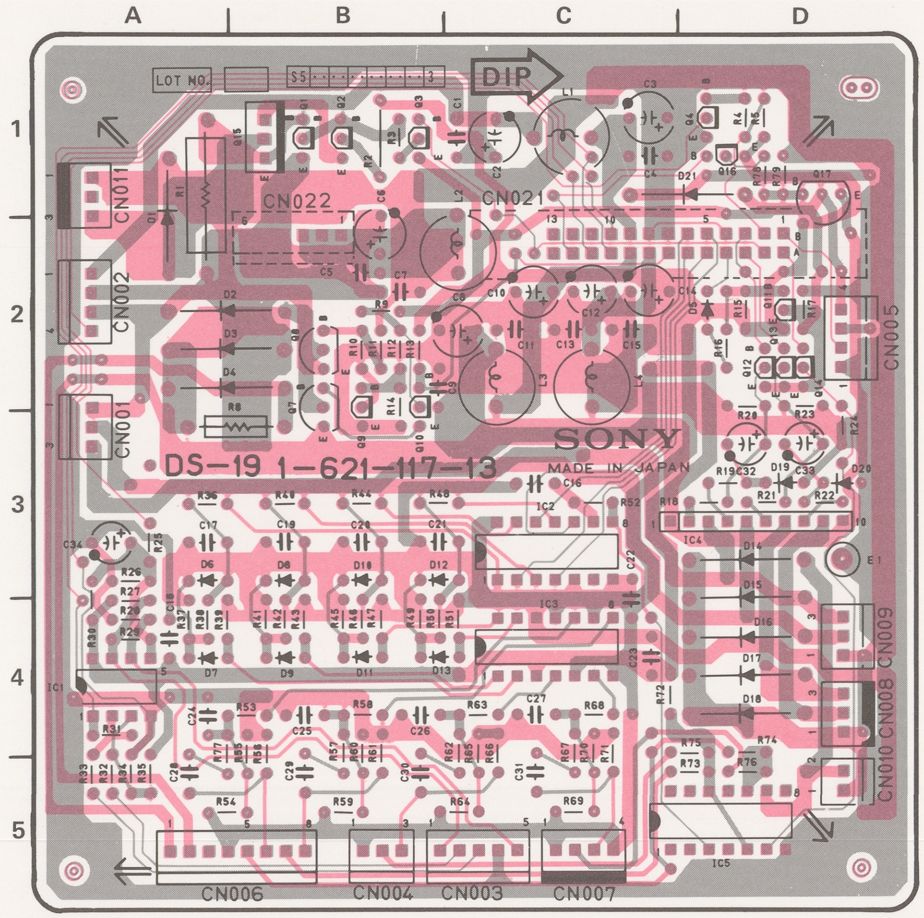
A
B
C
D
1
2
3
4
5
LOT NO.
DIP
CN011
CN022
CN021
CN002
CN001
CN005
CN009
CN008
CN010
CN006
CN004
CN003
CN007
SONY
MADE IN JAPAN
DS-19 1-621-117-13
IC1
IC2
IC3
IC4
IC5
E1

1-621-117-13 COMPONENT SIDE

1-621-117-13 SOLDER SIDE

**DS-19 (1-621-117-13)**

**HDD-1000**

| | |
|---|---|
| CN1 | A2 |
| CN2 | A2 |
| CN3 | B4 |
| CN4 | B4 |
| CN5 | D2 |
| CN6 | A4 |
| CN7 | C4 |
| CN8 | D4 |
| CN9 | D3 |
| CN10 | D4 |
| CN11 | A1 |
| CN21 | C1 |
| CN22 | B1 |
| D1 | A1 |
| D2 | A2 |
| D3 | A2 |
| D4 | A2 |
| D5 | C2 |
| D6 | A3 |
| D7 | A3 |
| D8 | B3 |
| D9 | B3 |
| D10 | B3 |
| D11 | B3 |
| D12 | B3 |
| D13 | B3 |
| D14 | D3 |
| D15 | D3 |
| D16 | D3 |
| D17 | D3 |
| D18 | D4 |
| D19 | D2 |
| D20 | D2 |
| D21 | C1 |
| E1 | D3 |
| IC1 | A3 |
| IC2 | C3 |
| IC3 | C3 |
| IC4 | C3 |
| IC5 | D4 |
| Q1 | B1 |
| Q2 | B1 |
| Q3 | B1 |
| Q4 | C1 |
| Q7 | B2 |
| Q8 | B2 |
| Q9 | B2 |
| Q10 | B2 |
| Q11 | D2 |
| Q12 | D2 |
| Q13 | D2 |
| Q14 | D2 |
| Q15 | A1 |
| Q16 | D1 |
| Q17 | D1 |

## DS-19 BOARD
TTP AUX

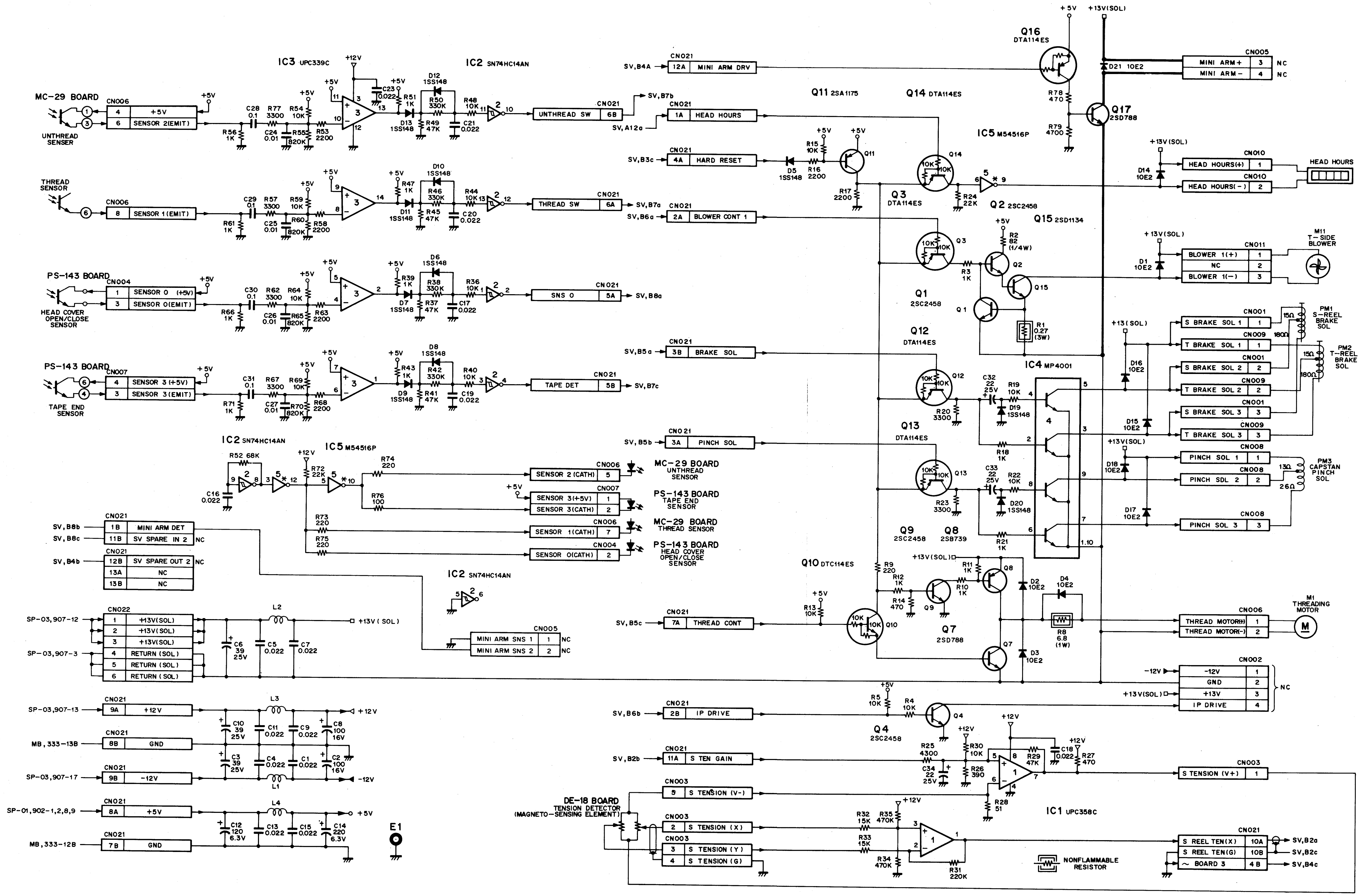
MC-29 BOARD
UNTHREAD SENSER
THREAD SENSOR
PS-143 BOARD
HEAD COVER OPEN/CLOSE SENSOR
TAPE END SENSOR
CN006
CN004
CN007
+5V
SENSOR 2(EMIT)
SENSOR 1(EMIT)
SENSOR 0 (+5V)
SENSOR 0(EMIT)
SENSOR 3 (+5V)
SENSOR 3(EMIT)
IC3 UPC339C
IC2 SN74HC14AN
IC5 M54516P
+12V
UNTHREAD SW
THREAD SW
SNS 0
TAPE DET
CN021
MINI ARM DRV
HEAD HOURS
HARD RESET
BLOWER CONT 1
BRAKE SOL
PINCH SOL
THREAD CONT
IP DRIVE
S TEN GAIN
SV,B4A
SV,B7b
SV,A12a
SV,B3c
SV,B7a
SV,B6a
SV,B8a
SV,B5a
SV,B7c
SV,B5b
SV,B5c
SV,B6b
SV,B2b
SENSOR 2 (CATH)
SENSOR 3(+5V)
SENSOR 3(CATH)
SENSOR 1(CATH)
SENSOR 0(CATH)
MC-29 BOARD UNTHREAD SENSOR
PS-143 BOARD TAPE END SENSOR
MC-29 BOARD THREAD SENSOR
PS-143 BOARD HEAD COVER OPEN/CLOSE SENSOR
SV,B8b
SV,B8c
SV,B4b
MINI ARM DET
SV SPARE IN 2
SV SPARE OUT 2
NC
CN005
MINI ARM SNS 1
MINI ARM SNS 2
CN022
SP-03,907-12
SP-03,907-3
+13V(SOL)
RETURN (SOL)
L2
+13V ( SOL)
SP-03,907-13
MB,333-13B
SP-03,907-17
SP-01,902-1,2,8,9
MB,333-12B
+12V
GND
-12V
+5V
L3
L1
L4
E1
Q16 DTA114ES
Q17 2SD788
Q11 2SA1175
Q14 DTA114ES
Q3 DTA114ES
Q2 2SC2458
Q15 2SD1134
Q1 2SC2458
Q12 DTA114ES
Q13 DTA114ES
Q9 2SC2458
Q8 2SB739
Q10 DTC114ES
Q7 2SD788
Q4 2SC2458
IC4 MP4001
IC1 UPC358C
D21 10E2
MINI ARM +
MINI ARM -
HEAD HOURS(+)
HEAD HOURS(-)
CN010
HEAD HOURS
BLOWER 1(+)
BLOWER 1(-)
CN011
M11 T-SIDE BLOWER
S BRAKE SOL 1
T BRAKE SOL 1
S BRAKE SOL 2
T BRAKE SOL 2
S BRAKE SOL 3
T BRAKE SOL 3
CN001
CN009
PM1 S-REEL BRAKE SOL
PM2 T-REEL BRAKE SOL
PINCH SOL 1
PINCH SOL 2
PINCH SOL 3
CN008
PM3 CAPSTAN PINCH SOL
THREAD MOTOR(+)
THREAD MOTOR(-)
M1 THREADING MOTOR
CN002
-12V
+13V
IP DRIVE
S TENSION (V+)
CN003
DE-18 BOARD TENSION DETECTOR (MAGNETO-SENSING ELEMENT)
S TENSION (V-)
S TENSION (X)
S TENSION (Y)
S TENSION (G)
S REEL TEN(X)
S REEL TEN(G)
~ BOARD 3
SV,B2a
SV,B2c
SV,B4c
NONFLAMMABLE RESISTOR

**DS-19** BOARD
BOARD NO.1-621-117-13
HDD-1000(J); #10001-
HDD-1000(UC); #10001-
HDD-1000(EK); #10001-

## FE-05 BOARD (1-628-207-11)

Component Side

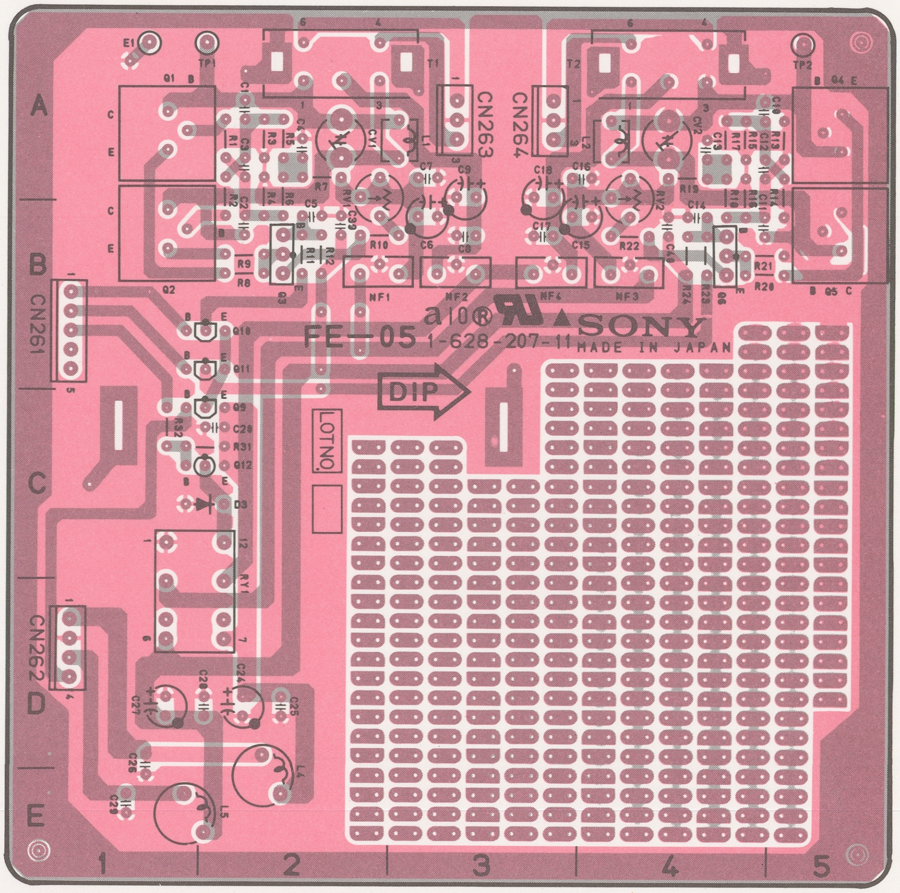
A
B
C
D
E
1
2
3
4
5
E1
TP1
TP2
T1
T2
CN261
CN262
CN263
CN264
Q1
Q2
Q3
Q4
Q5
Q6
Q9
Q10
Q11
Q12
CV1
CV2
RV1
RV2
RY1
D3
L1
L2
L4
L5
NF1
NF2
NF3
NF4
FE-05 1-628-207-11
SONY
MADE IN JAPAN
DIP
LOT NO.

1-628-207-11 COMPONENT SIDE

1-628-207-11 SOLDER SIDE

### FE-05 (1-628-207-11)

**HDD-1000**

| | |
|---|---|
| CN261 | B1 |
| CN262 | D1 |
| CN263 | A3 |
| CN264 | A3 |
| CV1 | A2 |
| CV2 | A4 |
| D3 | D2 |
| E1 | A1 |
| Q1 | A1 |
| Q2 | B1 |
| Q3 | B2 |
| Q4 | A5 |
| Q5 | B5 |
| Q6 | B4 |
| Q9 | C2 |
| Q10 | B2 |
| Q11 | B2 |
| Q12 | C2 |
| RV1 | B2 |
| RV2 | B4 |
| RY1 | C2 |
| T1 | A3 |
| T2 | A3 |
| TP1 | A2 |
| TP2 | A5 |

## FE-05 BOARD

### Rotary Erase Amplifier

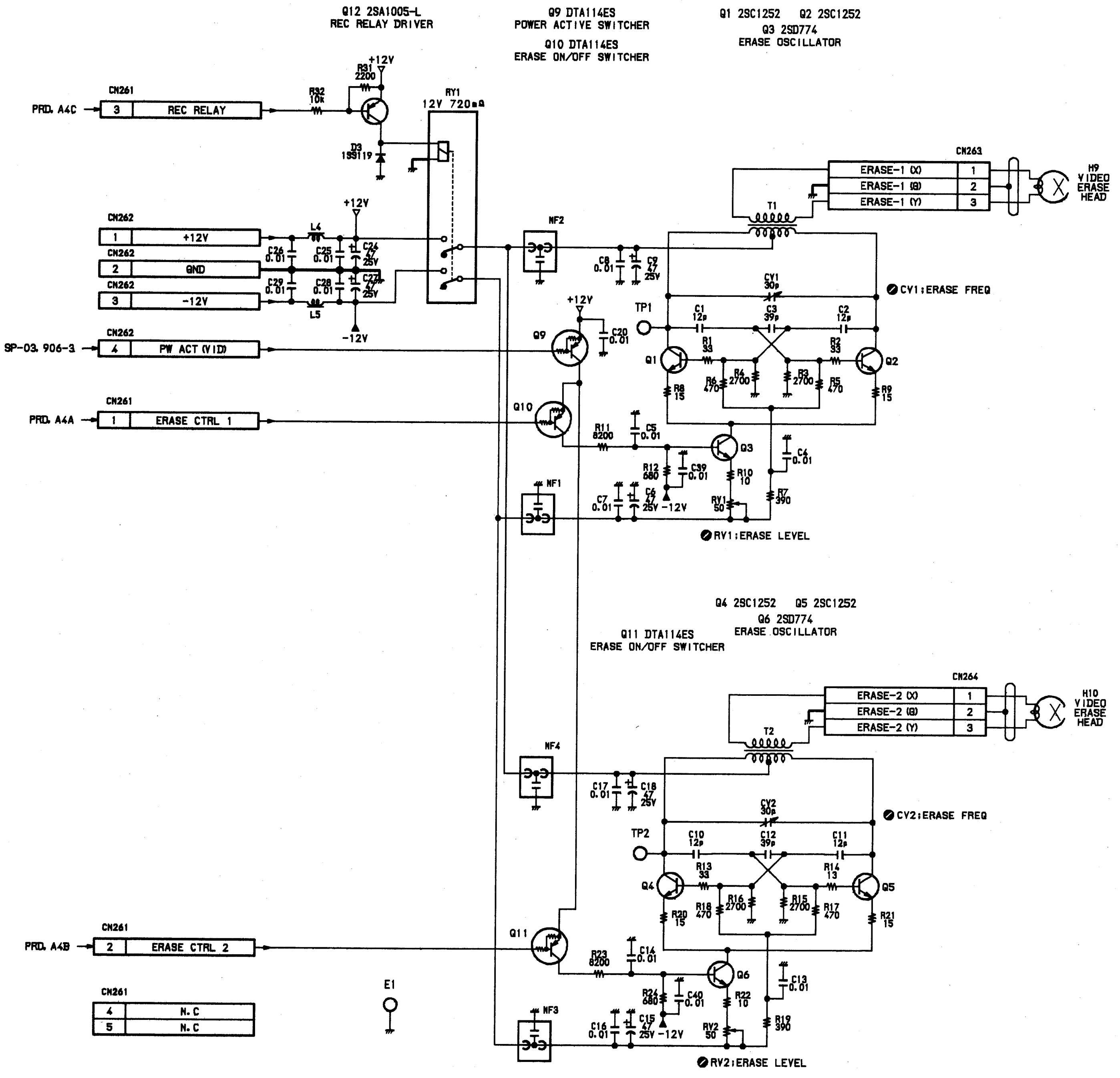
Q12 2SA1005-L
REC RELAY DRIVER
Q9 DTA114ES
POWER ACTIVE SWITCHER
Q10 DTA114ES
ERASE ON/OFF SWITCHER
Q1 2SC1252 Q2 2SC1252
Q3 2SD774
ERASE OSCILLATOR
PRD. A4C
CN261
3 REC RELAY
R32 10k
R31 2200
+12V
D3 1SS119
RY1 12V 720mΩ
CN262
1 +12V
2 GND
3 -12V
L4
L5
C26 0.01
C25 0.01
C24 47 25V
C29 0.01
C28 0.01
C27 47 25V
+12V
-12V
SP-03, 906-3
4 PW ACT (VID)
PRD. A4A
1 ERASE CTRL 1
NF2
C8 0.01
C9 47 25V
CN263
ERASE-1 (X) 1
ERASE-1 (G) 2
ERASE-1 (Y) 3
H9 VIDEO ERASE HEAD
T1
CV1 30p
CV1:ERASE FREQ
TP1
C1 12p
C3 39p
C2 12p
R1 33
R2 33
Q1
Q2
R6 470
R4 2700
R3 2700
R5 470
R8 15
R9 15
Q9
C20 0.01
Q10
R11 8200
C5 0.01
Q3
C4 0.01
R12 680
C39 0.01
R10 10
R7 390
NF1
C7 0.01
C6 47 25V
-12V
RV1 50
RV1:ERASE LEVEL
Q4 2SC1252 Q5 2SC1252
Q6 2SD774
ERASE OSCILLATOR
Q11 DTA114ES
ERASE ON/OFF SWITCHER
CN264
ERASE-2 (X) 1
ERASE-2 (G) 2
ERASE-2 (Y) 3
H10 VIDEO ERASE HEAD
T2
NF4
C17 0.01
C18 47 25V
CV2 30p
CV2:ERASE FREQ
TP2
C10 12p
C12 39p
C11 12p
R13 33
R14 13
Q4
Q5
R16 2700
R15 2700
R18 470
R17 470
R20 15
R21 15
Q11
PRD. A4B
CN261
2 ERASE CTRL 2
C14 0.01
R23 8200
Q6
C13 0.01
R24 680
C40 0.01
R22 10
R19 390
NF3
C16 0.01
C15 47 25V
-12V
RV2 50
RV2:ERASE LEVEL
CN261
4 N.C
5 N.C
E1

**FE-05** BOARD
BOARD NO. 1-628-207-11
HDD-1000 (J); #10001-
HDD-1000 (UC); #10001-
HDD-1000 (EK); #10001-

### UDR-1 BOARD (1-627-806-12)

Component Side

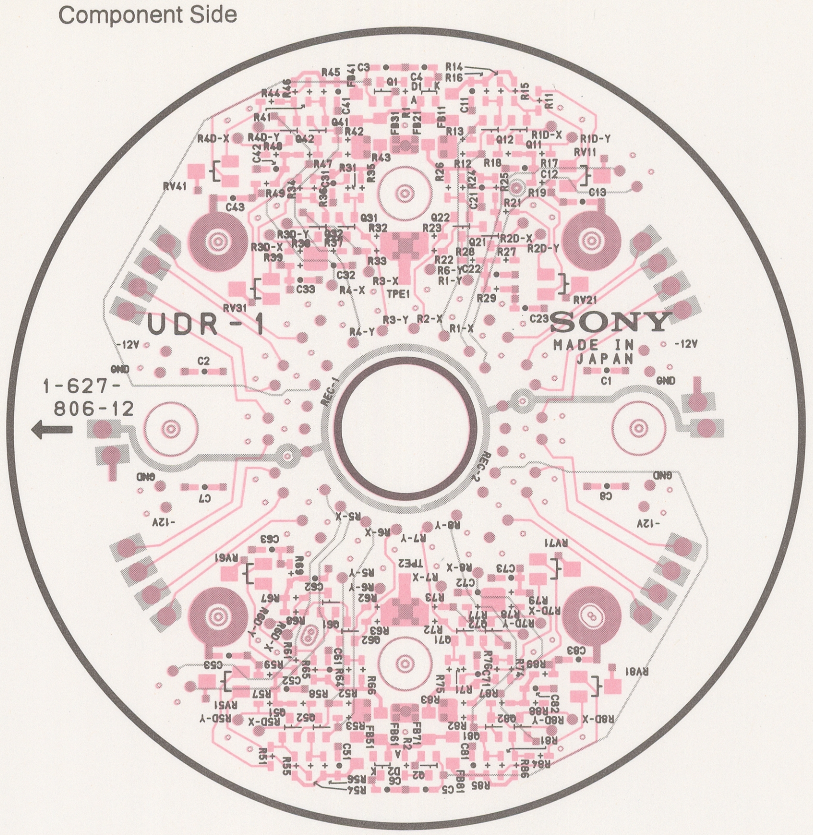
UDR-1
SONY
MADE IN JAPAN
1-627-806-12
-12V
GND

1-627-806-12 COMPONENT SIDE 1-627-806-12 SOLDER SIDE

### UDR-3 BOARD (1-627-808-12)

Solder Side

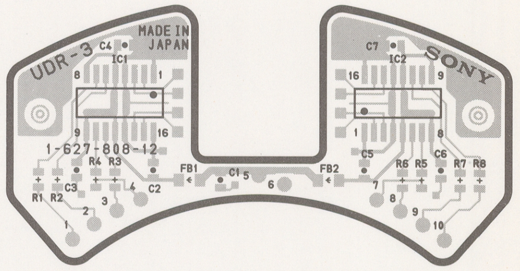
UDR-3
MADE IN JAPAN
SONY
1-627-808-12
IC1
IC2

1-627-808-12 SOLDER SIDE

### UDR-2 BOARD (1-627-807-11)

Component Side

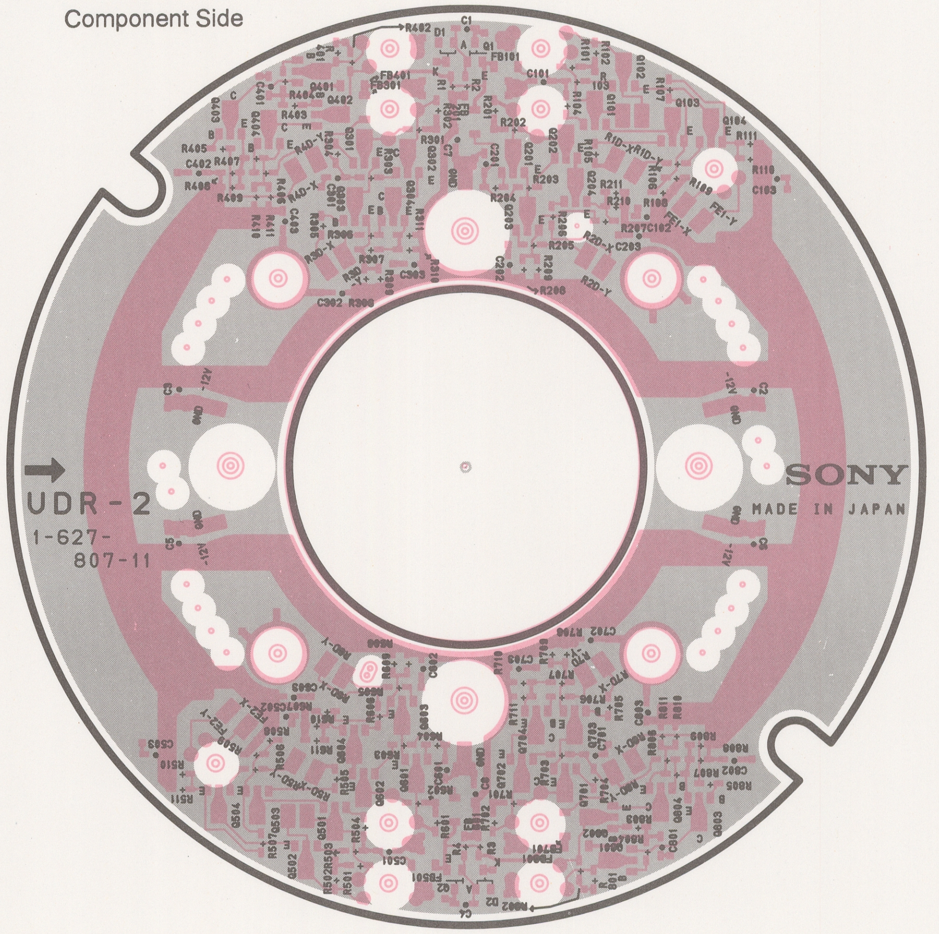
UDR-2
1-627-807-11
SONY
MADE IN JAPAN

1-627-807-11 COMPONENT SIDE 1-627-807-11 SOLDER SIDE

### LDR-4 BOARD (1-627-809-12)

Solder Side

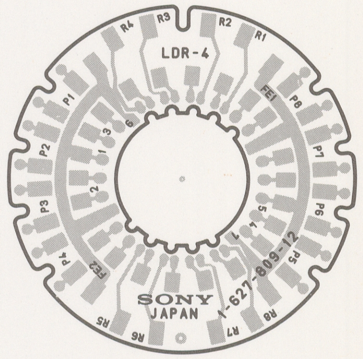
LDR-4
SONY
JAPAN
1-627-809-12

1-627-809-12 SOLDER SIDE

### LDR-2 BOARD (1-627-804-11)

Component Side

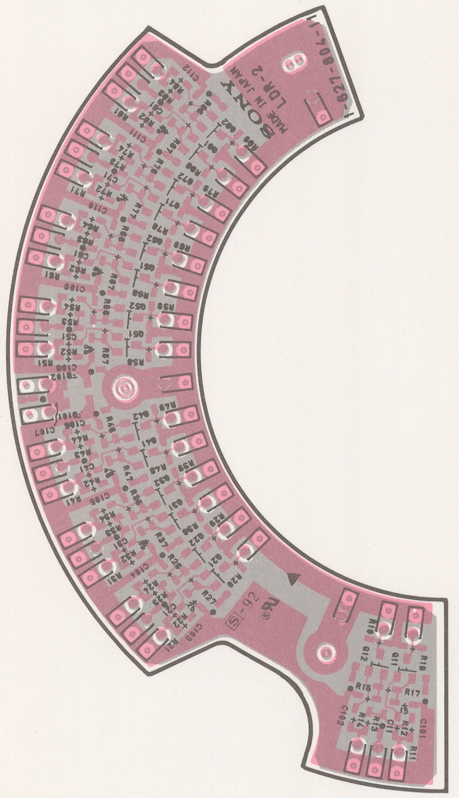
LDR-2
SONY
MADE IN JAPAN

1-627-804-11 COMPONENT SIDE

1-627-804-11 SOLDER SIDE

### LDR-3 BOARD (1-627-805-11)

Component Side

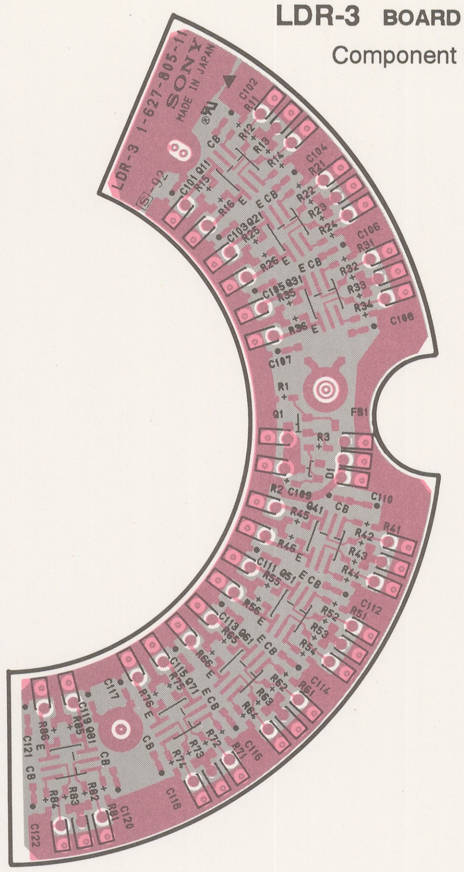
LDR-3
SONY
MADE IN JAPAN

1-627-805-11 COMPONENT SIDE

1-627-805-11 SOLDER SIDE

### SR-37 BOARD (1-628-568-12)

Solder Side

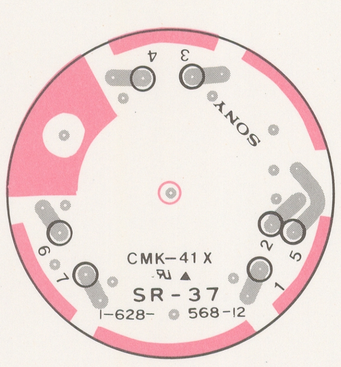
SONY
CMK-41X
SR-37
1-628-568-12

1-628-568-12 COMPONENT SIDE

1-628-568-12 SOLDER SIDE

### SR-38 BOARD (1-628-569-11)

Solder Side

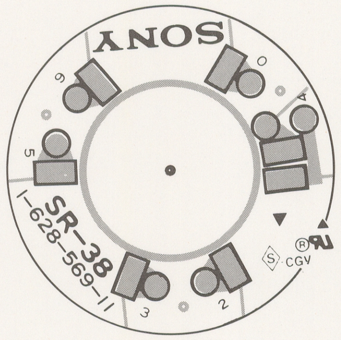
SONY
SR-38
1-628-569-11
CGV

1-628-569-11 SOLDER SIDE

### LDR-1 BOARD (1-627-803-11)

Solder Side

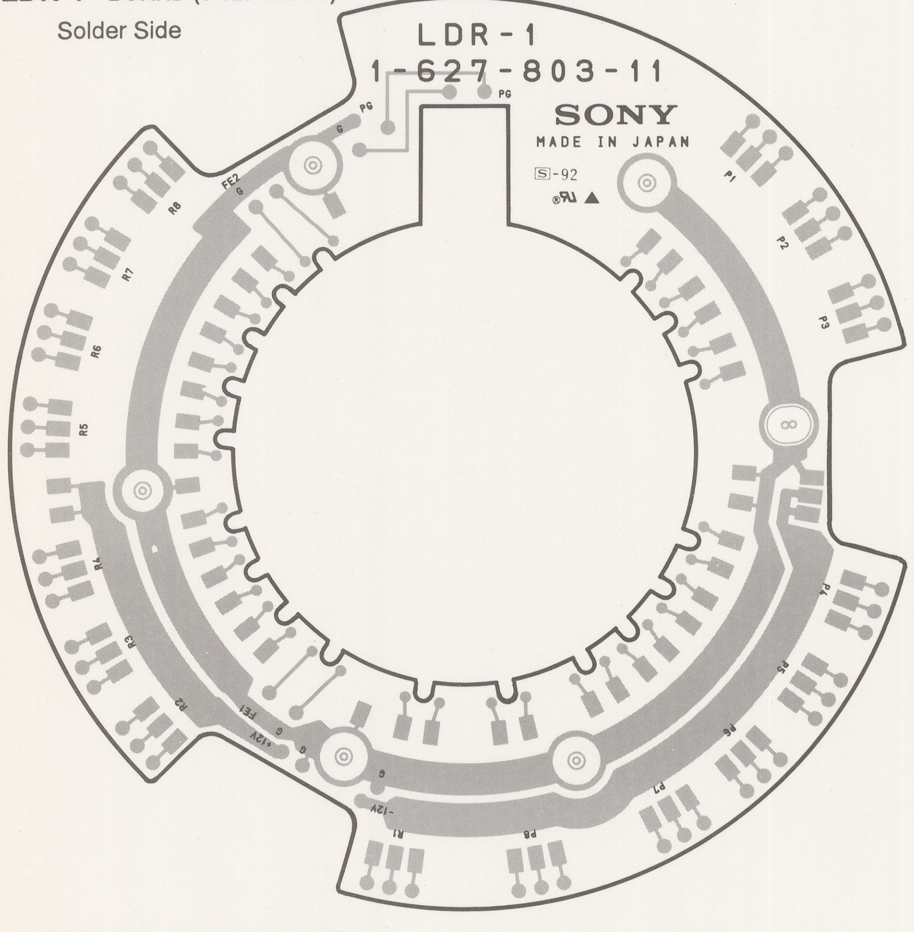
LDR-1
1-627-803-11
SONY
MADE IN JAPAN

1-627-803-11 SOLDER SIDE

### SR-44 BOARD (1-628-571-11)

Solder Side

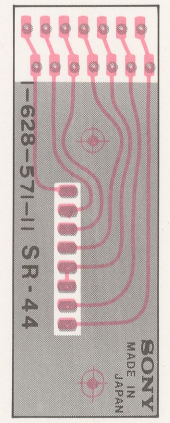
1-628-571-11 SR-44
SONY
MADE IN JAPAN

1-628-571-11 COMPONENT SIDE

1-628-571-11 SOLDER SIDE

## HEAD DRUM (1/2)

**LDR-1/2/4 BOARD**

**UDR-1/2 BOARD**

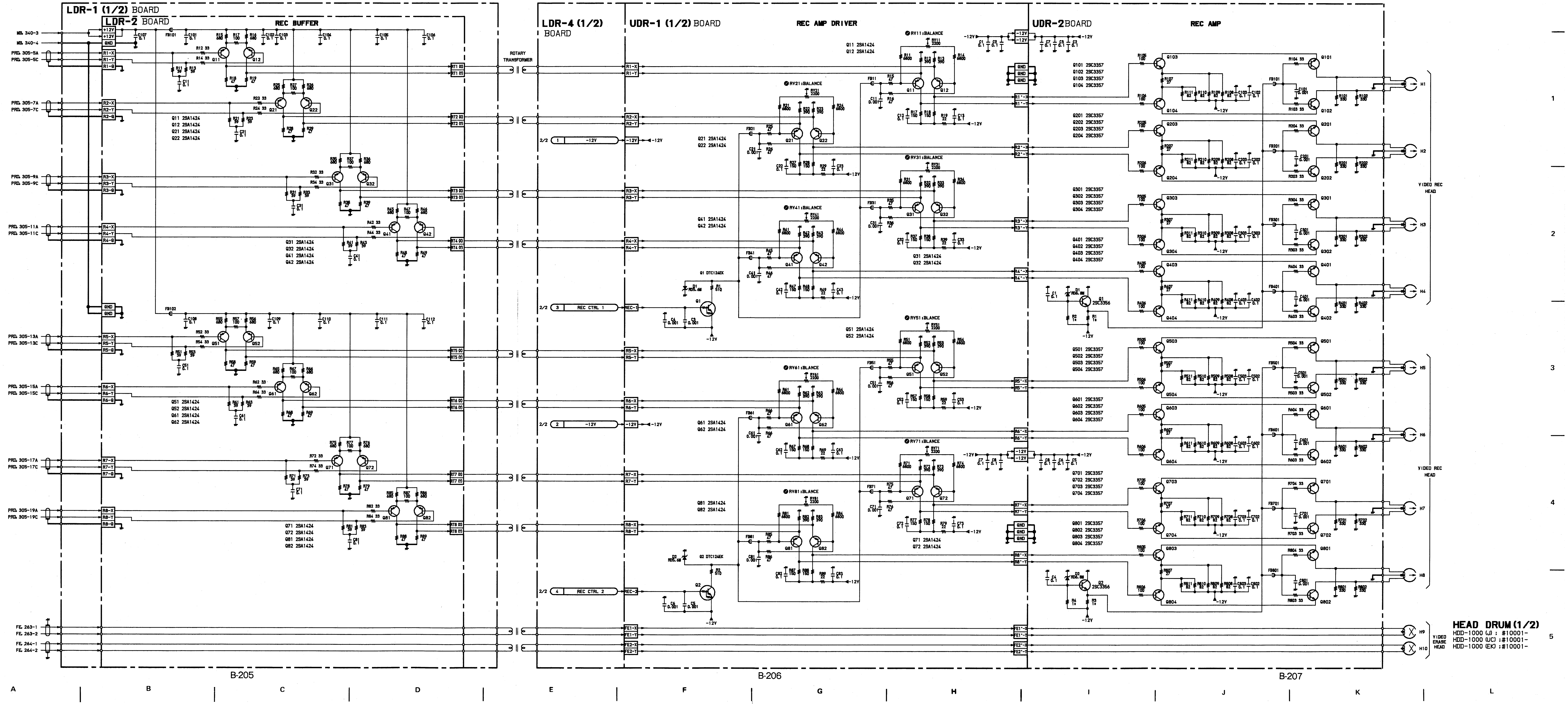
LDR-1 (1/2) BOARD
LDR-2 BOARD
REC BUFFER
LDR-4 (1/2) BOARD
UDR-1 (1/2) BOARD
REC AMP DRIVER
UDR-2 BOARD
REC AMP
ROTARY TRANSFORMER
MB. 340-3
MB. 340-4
PRD. 305-5A
PRD. 305-5C
PRD. 305-7A
PRD. 305-7C
PRD. 305-9A
PRD. 305-9C
PRD. 305-11A
PRD. 305-11C
PRD. 305-13A
PRD. 305-13C
PRD. 305-15A
PRD. 305-15C
PRD. 305-17A
PRD. 305-17C
PRD. 305-19A
PRD. 305-19C
FE. 263-1
FE. 263-2
FE. 264-1
FE. 264-2
+12V
GND
R1-X
R1-Y
R1-G
R2-X
R2-Y
R2-G
R3-X
R3-Y
R3-G
R4-X
R4-Y
R4-G
R5-X
R5-Y
R5-G
R6-X
R6-Y
R6-G
R7-X
R7-Y
R7-G
R8-X
R8-Y
R8-G
FB101
FB102
Q11 2SA1424
Q12 2SA1424
Q21 2SA1424
Q22 2SA1424
Q31 2SA1424
Q32 2SA1424
Q41 2SA1424
Q42 2SA1424
Q51 2SA1424
Q52 2SA1424
Q61 2SA1424
Q62 2SA1424
Q71 2SA1424
Q72 2SA1424
Q81 2SA1424
Q82 2SA1424
2/2 1 -12V
2/2 3 REC CTRL 1
2/2 2 -12V
2/2 4 REC CTRL 2
REC-1
REC-2
Q1 DTC124EK
Q2 DTC124EK
RV11 : BALANCE
RV21 : BALANCE
RV31 : BALANCE
RV41 : BALANCE
RV51 : BLANCE
RV61 : BLANCE
RV71 : BLANCE
RV81 : BLANCE
FE1-X
FE1-Y
FE2-X
FE2-Y
Q101 2SC3357
Q102 2SC3357
Q103 2SC3357
Q104 2SC3357
Q201 2SC3357
Q202 2SC3357
Q203 2SC3357
Q204 2SC3357
Q301 2SC3357
Q302 2SC3357
Q303 2SC3357
Q304 2SC3357
Q401 2SC3357
Q402 2SC3357
Q403 2SC3357
Q404 2SC3357
Q501 2SC3357
Q502 2SC3357
Q503 2SC3357
Q504 2SC3357
Q601 2SC3357
Q602 2SC3357
Q603 2SC3357
Q604 2SC3357
Q701 2SC3357
Q702 2SC3357
Q703 2SC3357
Q704 2SC3357
Q801 2SC3357
Q802 2SC3357
Q803 2SC3357
Q804 2SC3357
Q1 2SC3356
Q2 2SC3356
H1
H2
H3
H4
H5
H6
H7
H8
VIDEO REC HEAD
H9
H10
VIDEO ERASE HEAD
B-205
B-206
B-207
A
B
C
D
E
F
G
H
I
J
K
L
1
2
3
4
5

**HEAD DRUM (1/2)**
HDD-1000 (J) : #10001-
HDD-1000 (UC) :#10001-
HDD-1000 (EK) :#10001-

## HEAD DRUM (2/2)

**LDR-1/3/4 BOARD**
**UDR-1/3 BOARD**
**SR-37/38/44 BOARD**

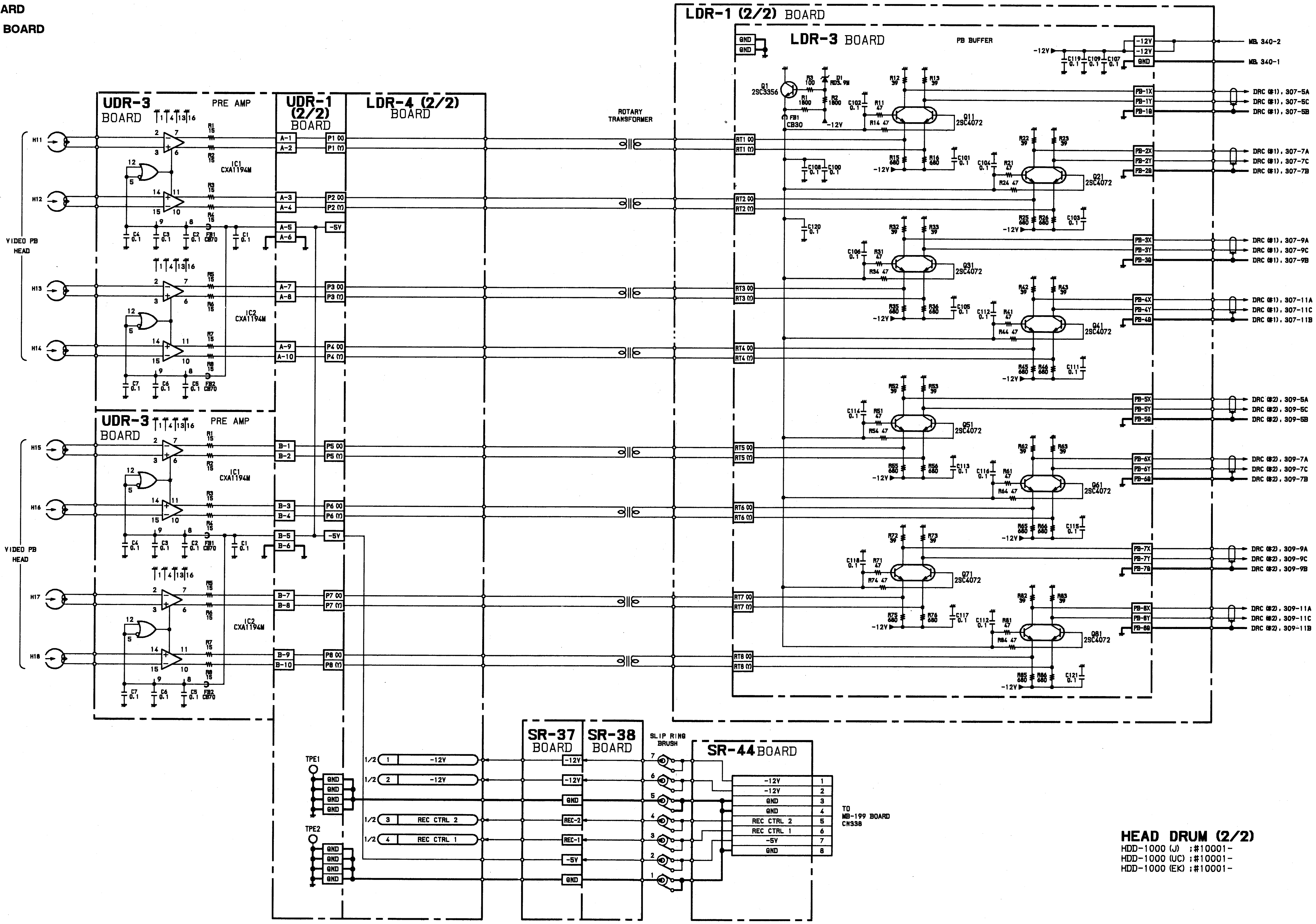
UDR-3 BOARD
PRE AMP
UDR-1 (2/2) BOARD
LDR-4 (2/2) BOARD
LDR-1 (2/2) BOARD
LDR-3 BOARD
PB BUFFER
ROTARY TRANSFORMER
VIDEO PB HEAD
H11
H12
H13
H14
H15
H16
H17
H18
IC1 CXA1194M
IC2 CXA1194M
Q1 2SC3356
Q11 2SC4072
Q21 2SC4072
Q31 2SC4072
Q41 2SC4072
Q51 2SC4072
Q61 2SC4072
Q71 2SC4072
Q81 2SC4072
MB 340-2
MB 340-1
DRC (#1), 307-5A
DRC (#1), 307-5C
DRC (#1), 307-5B
DRC (#1), 307-7A
DRC (#1), 307-7C
DRC (#1), 307-7B
DRC (#1), 307-9A
DRC (#1), 307-9C
DRC (#1), 307-9B
DRC (#1), 307-11A
DRC (#1), 307-11C
DRC (#1), 307-11B
DRC (#2), 309-5A
DRC (#2), 309-5C
DRC (#2), 309-5B
DRC (#2), 309-7A
DRC (#2), 309-7C
DRC (#2), 309-7B
DRC (#2), 309-9A
DRC (#2), 309-9C
DRC (#2), 309-9B
DRC (#2), 309-11A
DRC (#2), 309-11C
DRC (#2), 309-11B
SR-37 BOARD
SR-38 BOARD
SR-44 BOARD
SLIP RING BRUSH
TPE1
TPE2
-12V
-12V
GND
GND
REC CTRL 2
REC CTRL 1
-5V
GND
TO MB-199 BOARD CN338

**HEAD DRUM (2/2)**
HDD-1000 (J) :#10001-
HDD-1000 (UC) :#10001-
HDD-1000 (EK) :#10001-

## KY-139 BOARD (1-628-212-11)

Component Side

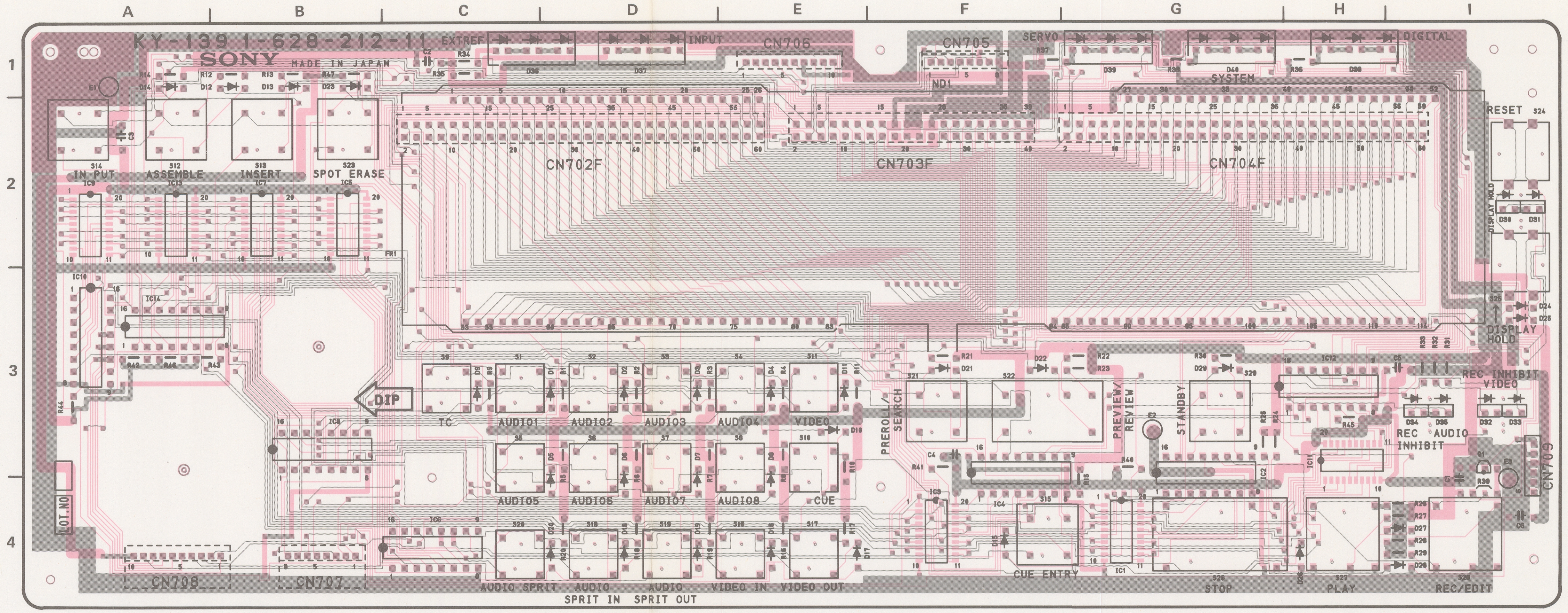
A
B
C
D
E
F
G
H
I
1
2
3
4
KY-139 1-628-212-11
SONY
MADE IN JAPAN
EXTREF
INPUT
CN706
CN705
SERVO
DIGITAL
SYSTEM
ND1
IN PUT
ASSEMBLE
INSERT
SPOT ERASE
CN702F
CN703F
CN704F
RESET
DISPLAY HOLD
DIP
TC
AUDIO1
AUDIO2
AUDIO3
AUDIO4
VIDEO
PREROLL/SEARCH
PREVIEW/REVIEW
STANDBY
REC INHIBIT VIDEO
REC INHIBIT AUDIO
CN709
AUDIO5
AUDIO6
AUDIO7
AUDIO8
CUE
LOT NO
CN708
CN707
AUDIO SPRIT
AUDIO SPRIT IN
AUDIO SPRIT OUT
VIDEO IN
VIDEO OUT
CUE ENTRY
STOP
PLAY
REC/EDIT

1-628-212-11 SOLDER SIDE

1-628-212-11 COMPONENT SIDE

## KC-14 BOARD (1-621-120-11)

Component Side

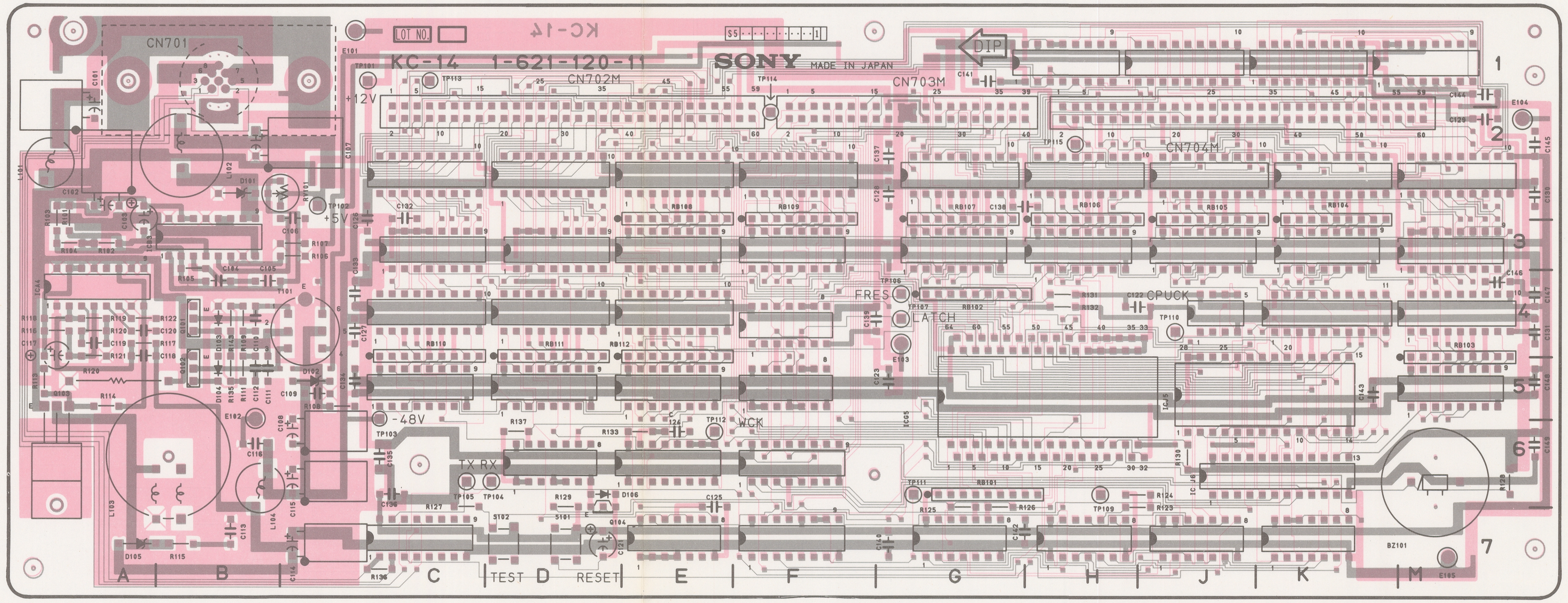
CN701
LOT NO
KC-14
KC-14 1-621-120-11
CN702M
SONY
MADE IN JAPAN
DIP
CN703M
CN704M
+12V
+5V
FRES
LATCH
CPUCK
-48V
WCK
TX
RX
TEST
RESET
BZ101
1
2
3
4
5
6
7
A
B
C
D
E
F
G
H
J
K
M

1-621-120-11 SOLDER SIDE

1-621-120-11 COMPONENT SIDE

**KY-139 (1-628-212-11)**

**HDD-1000**

| | | | | | |
|---|---|---|---|---|---|
| CN702 | D2 | D28 | I4 | S1 | C3 |
| CN703 | F2 | D29 | G3 | S2 | D3 |
| CN704 | H2 | D30 | I2 | S3 | D3 |
| CN705 | F1 | D31 | I2 | S4 | E3 |
| CN706 | E1 | D32 | I3 | S5 | C3 |
| CN707 | B4 | D33 | I3 | S6 | D3 |
| CN708 | A4 | D34 | I3 | S7 | D3 |
| CN709 | I4 | D35 | I3 | S8 | E3 |
| | | D36 | C1 | S9 | C3 |
| D1 | D3 | D37 | D1 | S10 | E3 |
| D2 | D3 | D38 | H1 | S11 | E3 |
| D3 | D3 | D39 | G1 | S12 | A2 |
| D4 | E3 | D40 | H1 | S13 | B2 |
| D5 | D4 | | | S14 | A2 |
| D6 | D4 | E1 | A1 | S15 | F4 |
| D7 | D4 | E2 | G3 | S16 | E4 |
| D8 | E4 | E3 | I4 | S17 | E4 |
| D9 | C3 | | | S18 | D4 |
| D10 | E3 | IC1 | G4 | S19 | D4 |
| D11 | E3 | IC2 | H4 | S20 | C4 |
| D12 | B1 | IC3 | F4 | S21 | F3 |
| D13 | B1 | IC4 | F4 | S22 | F3 |
| D14 | A1 | IC5 | B2 | S23 | B2 |
| D15 | F4 | IC6 | C4 | S24 | I1 |
| D16 | E4 | IC7 | B2 | S25 | I2 |
| D17 | E4 | IC8 | B3 | S26 | G4 |
| D18 | D4 | IC9 | A2 | S27 | H4 |
| D19 | D4 | IC10 | A2 | S28 | I4 |
| D20 | D4 | IC11 | H4 | S29 | H3 |
| D21 | F3 | IC12 | H3 | | |
| D22 | F3 | IC13 | A2 | | |
| D23 | B1 | IC14 | A2 | | |
| D24 | I3 | | | | |
| D25 | I3 | ND1 | F1 | | |
| D26 | H4 | | | | |
| D27 | I4 | Q1 | I4 | | |

**KC-14 (1-621-120-11)**

**HDD-1000**

| | | | |
|---|---|---|---|
| CN701 | B1 | S101 | D7 |
| CN702 | D1 | S102 | D7 |
| CN703 | G1 | | |
| CN704 | J2 | T101 | C1 |
| D101 | B2 | TP101 | C1 |
| D102 | C5 | TP102 | C2 |
| D103 | B4 | TP103 | C6 |
| D104 | B5 | TP104 | D6 |
| D105 | A7 | TP105 | C6 |
| D106 | E6 | TP106 | G4 |
| | | TP107 | G4 |
| E101 | C1 | TP109 | H6 |
| E102 | B6 | TP110 | J4 |
| E103 | G5 | TP111 | G6 |
| E104 | M1 | TP112 | E6 |
| E105 | M7 | TP113 | C1 |
| | | TP114 | F1 |
| Q101 | B4 | TP115 | H2 |
| Q102 | B5 | | |
| Q103 | A5 | X101 | J4 |
| Q104 | D7 | | |
| RB101 | G6 | | |
| RB102 | G4 | | |
| RB103 | M4 | | |
| RB104 | K2 | | |
| RB105 | J2 | | |
| RB106 | H2 | | |
| RB107 | G2 | | |
| RB108 | E2 | | |
| RB109 | F2 | | |
| RB110 | C4 | | |
| RB111 | D4 | | |
| RB112 | E4 | | |
| RV101 | C2 | | |

## EN-55 BOARD (1-621-122-11)

Component Side

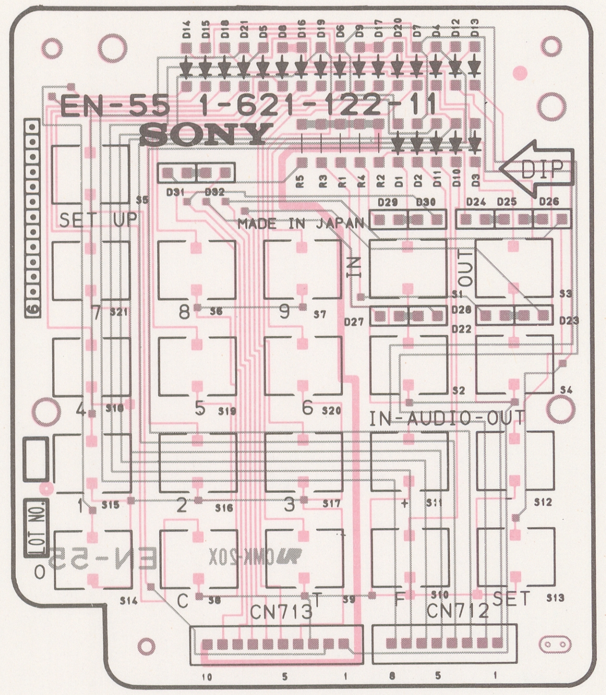
EN-55 1-621-122-11
SONY
DIP
SET UP
MADE IN JAPAN
IN
OUT
IN-AUDIO-OUT
SET
CN713
CN712
LOT NO

1-621-122-11 COMPONENT SIDE
1-621-122-11 SOLDER SIDE

## DP-63 BOARD (1-621-121-12)

Component Side

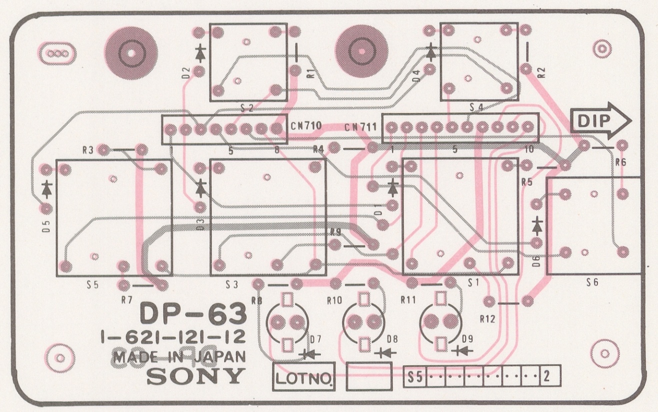
DIP
DP-63
1-621-121-12
MADE IN JAPAN
SONY
LOTNO

1-621-121-12 COMPONENT SIDE
1-621-121-12 SOLDER SIDE

## DET-3 BOARD (1-618-489-11)

Solder Side

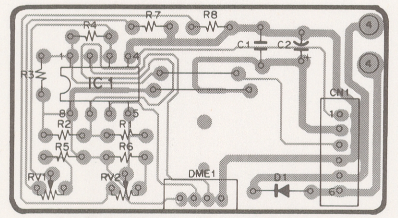

1-618-489-11 SOLDER SIDE

## FUNCTION CONTROL PANEL(1/2)

| | |
|---|---|
| **DET-3 BOARD** | : Search Dial Detector |
| **DP-63 BOARD** | : Sub Key |
| **EN-55 BOARD** | : Entry Key |
| **KY-139 BOARD** | : Main Key |

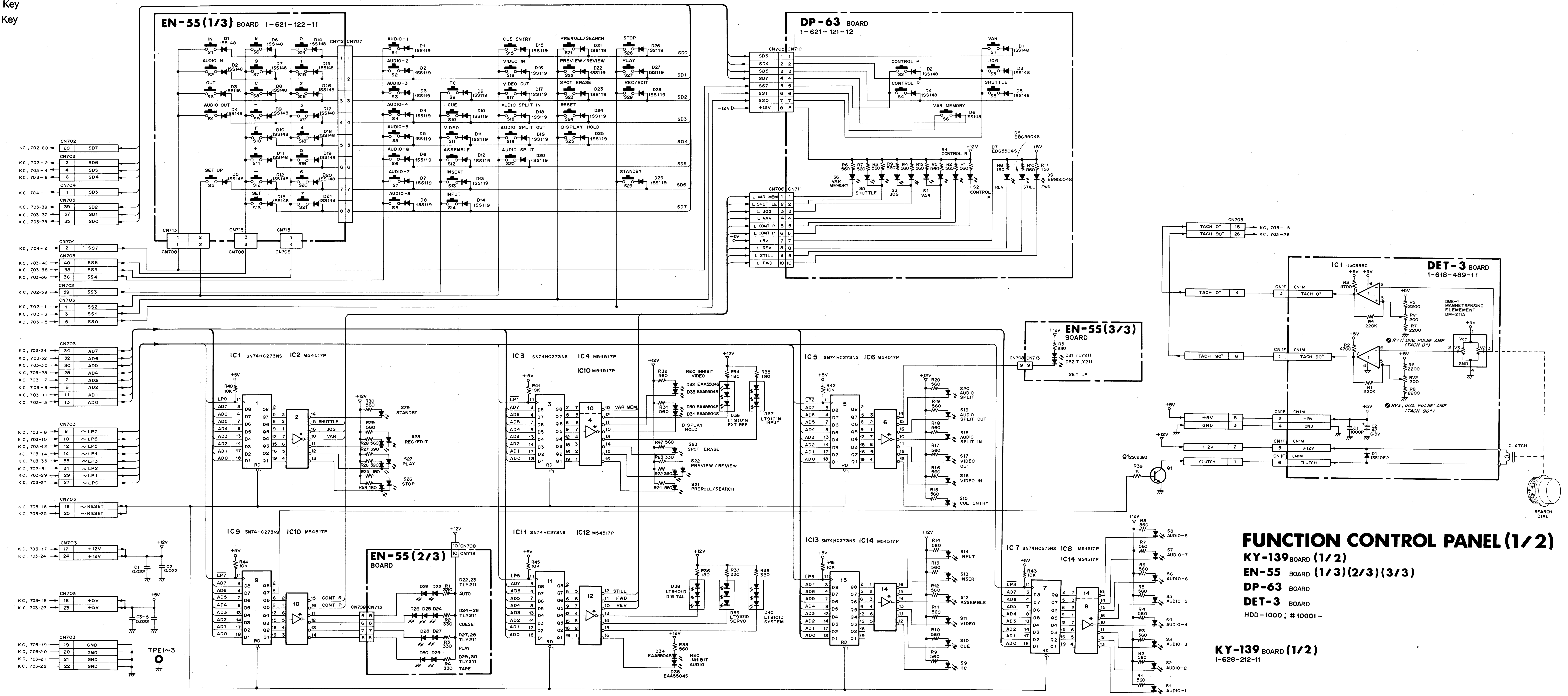
EN-55 (1/3) BOARD 1-621-122-11
DP-63 BOARD 1-621-121-12
EN-55 (3/3) BOARD
EN-55 (2/3) BOARD
DET-3 BOARD 1-618-489-11
IC1 SN74HC273NS IC2 M54517P
IC3 SN74HC273NS IC4 M54517P
IC10 M54517P
IC5 SN74HC273NS IC6 M54517P
IC9 SN74HC273NS IC10 M54517P
IC11 SN74HC273NS IC12 M54517P
IC13 SN74HC273NS IC14 M54517P
IC7 SN74HC273NS IC8 M54517P
IC14 M54517P
IC1 uPC393C
Q1 2SC2383
SEARCH DIAL
CLATCH
FUNCTION CONTROL PANEL (1/2)
KY-139 BOARD (1/2)
EN-55 BOARD (1/3)(2/3)(3/3)
DP-63 BOARD
DET-3 BOARD
HDD-1000 ; #10001–
KY-139 BOARD (1/2)
1-628-212-11

## FUNCTION CONTROL PANEL(2/2)

**KC-14 BOARD** : Key Control

**KY-139 BOARD** : Main Key

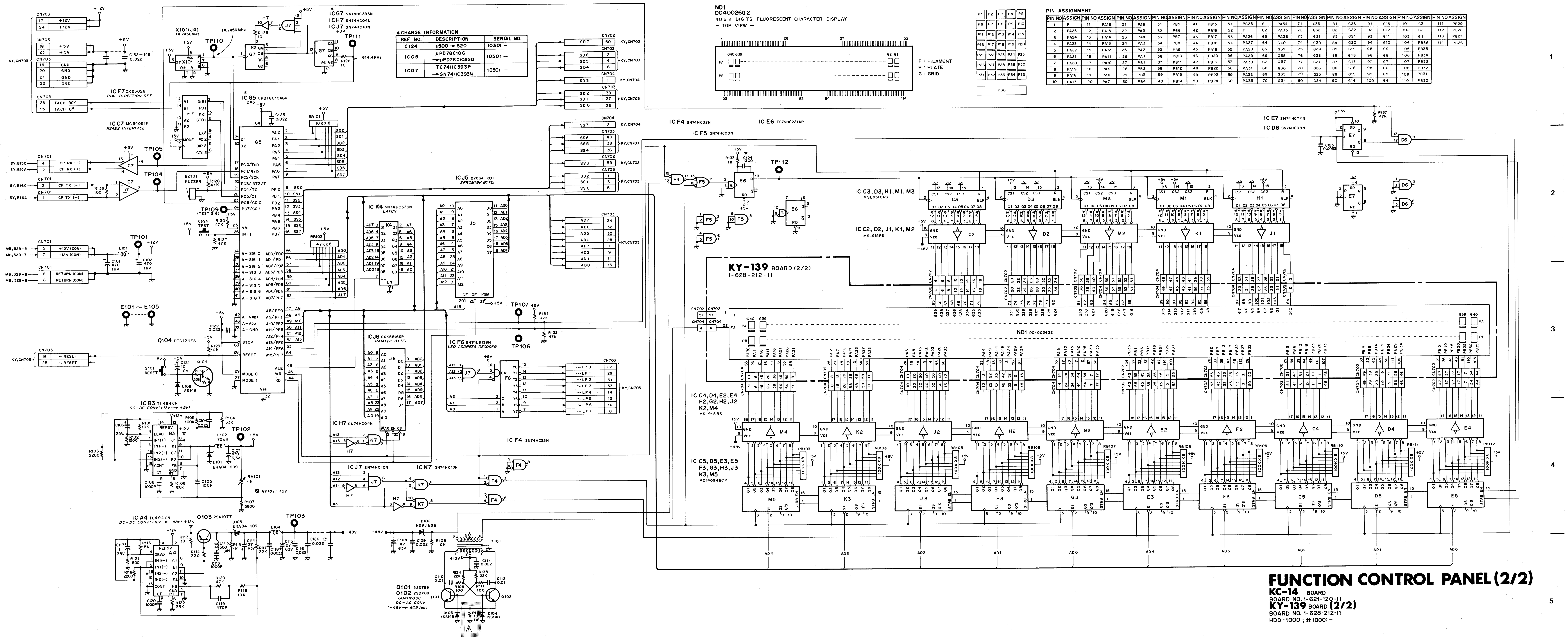
IC F7 CX23028 DIAL DIRECTION DET
IC C7 MC3405IP RS422 INTERFACE
IC G5 UPD78C10AGQ CPU
ICG7 SN74HC393N
ICH7 SN74HC04N
ICJ7 SN74HC10N
X101(J4) 14.7456MHz
614.4KHz
IC K4 SN74HC373N LATCH
IC J5 27C64-KCH EPROM(8K BYTE)
IC J6 CXK5816SP RAM(2K BYTE)
IC F6 SN74LS138N LED ADDRESS DECODER
IC H7 SN74HC04N
IC J7 SN74HC10N
IC K7 SN74HC10N
IC F4 SN74HC32N
IC B3 TL494CN DC-DC CONV(+12V→+5V)
IC A4 TL494CN DC-DC CONV(+12V→-48V)
Q103 2SA1077
Q104 DTC124ES
Q101 2SD789
Q102 2SD789
60KHzOSC DC-AC CONV (-48V→AC9Vpp)
ND1 DC40026G2
40 x 2 DIGITS FLUORESCENT CHARACTER DISPLAY
— TOP VIEW —
F : FILAMENT
P : PLATE
G : GRID
IC F4 SN74HC32N
IC F5 SN74HC00N
IC E6 TC74HC221AP
IC E7 SN74HC74N
IC D6 SN74HC08N
IC C3, D3, H1, M1, M3 MSL9510RS
IC C2, D2, J1, K1, M2 MSL915RS
IC C4, D4, E2, E4 F2, G2, H2, J2 K2, M4 MSL915RS
IC C5, D5, E3, E5 F3, G3, H3, J3 K3, M5 MC14094BCP
KY-139 BOARD (2/2) 1-628-212-11
TP101
TP102
TP103
TP104
TP105
TP106
TP107
TP109
TP110
TP111
TP112
E101 ~ E105
S101 RESET
S102 TEST
BZ101 BUZZER
RV101 1K

*CHANGE INFORMATION

| REF NO. | DESCRIPTION | SERIAL NO. |
|---|---|---|
| C124 | 1500 → 820 | 10301 – |
| ICG5 | μPD78C10G<br>→μPD78C10AGQ | 10501 – |
| ICG7 | TC74HC393P<br>→SN74HC393N | 10501 – |

PIN ASSIGNMENT

| PIN NO | ASSIGN | PIN NO | ASSIGN | PIN NO | ASSIGN | PIN NO | ASSIGN | PIN NO | ASSIGN | PIN NO | ASSIGN | PIN NO | ASSIGN | PIN NO | ASSIGN | PIN NO | ASSIGN | PIN NO | ASSIGN | PIN NO | ASSIGN | PIN NO | ASSIGN |
|---|---|---|---|---|---|---|---|---|---|---|---|---|---|---|---|---|---|---|---|---|---|---|---|
| 1 | F | 11 | PA16 | 21 | PA6 | 31 | PB5 | 41 | PB15 | 51 | PB25 | 61 | PA34 | 71 | G33 | 81 | G23 | 91 | G13 | 101 | G3 | 111 | PB29 |
| 2 | PA25 | 12 | PA15 | 22 | PA5 | 32 | PB6 | 42 | PB16 | 52 | F | 62 | PA35 | 72 | G32 | 82 | G22 | 92 | G12 | 102 | G2 | 112 | PB28 |
| 3 | PA24 | 13 | PA14 | 23 | PA4 | 33 | PB7 | 43 | PB17 | 53 | PA26 | 63 | PA36 | 73 | G31 | 83 | G21 | 93 | G11 | 103 | G1 | 113 | PB27 |
| 4 | PA23 | 14 | PA13 | 24 | PA3 | 34 | PB8 | 44 | PB18 | 54 | PA27 | 64 | G40 | 74 | G30 | 84 | G20 | 94 | G10 | 104 | PB36 | 114 | PB26 |
| 5 | PA22 | 15 | PA12 | 25 | PA2 | 35 | PB9 | 45 | PB19 | 55 | PA28 | 65 | G39 | 75 | G29 | 85 | G19 | 95 | G9 | 105 | PB35 | | |
| 6 | PA21 | 16 | PA11 | 26 | PA1 | 36 | PB10 | 46 | PB20 | 56 | PA29 | 66 | G38 | 76 | G28 | 86 | G18 | 96 | G8 | 106 | PB34 | | |
| 7 | PA20 | 17 | PA10 | 27 | PB1 | 37 | PB11 | 47 | PB21 | 57 | PA30 | 67 | G37 | 77 | G27 | 87 | G17 | 97 | G7 | 107 | PB33 | | |
| 8 | PA19 | 18 | PA9 | 28 | PB2 | 38 | PB12 | 48 | PB22 | 58 | PA31 | 68 | G36 | 78 | G26 | 88 | G16 | 98 | G6 | 108 | PB32 | | |
| 9 | PA18 | 19 | PA8 | 29 | PB3 | 39 | PB13 | 49 | PB23 | 59 | PA32 | 69 | G35 | 79 | G25 | 89 | G15 | 99 | G5 | 109 | PB31 | | |
| 10 | PA17 | 20 | PA7 | 30 | PB4 | 40 | PB14 | 50 | PB24 | 60 | PA33 | 70 | G34 | 80 | G24 | 90 | G14 | 100 | G4 | 110 | PB30 | | |

# FUNCTION CONTROL PANEL(2/2)

**KC-14** BOARD
BOARD NO. 1-621-120-11
**KY-139** BOARD **(2/2)**
BOARD NO. 1-628-212-11
HDD-1000 ; # 10001 –

## **DIF-2** BOARD (1-628-206-11, 12)

Component Side

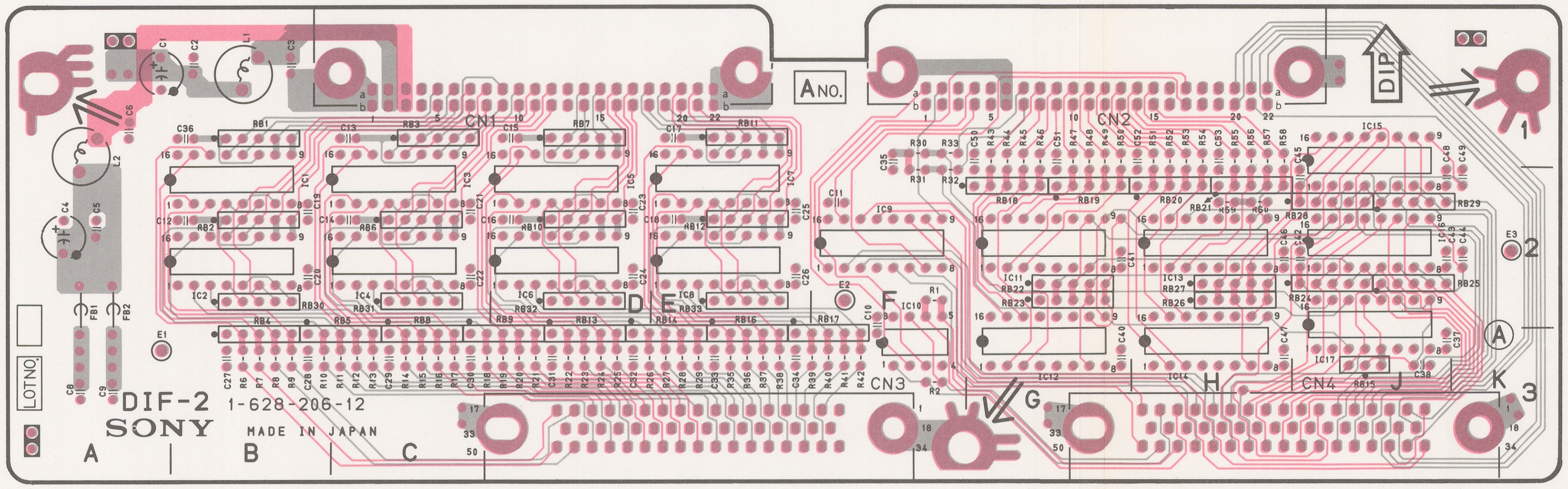
DIF-2
1-628-206-12
SONY
MADE IN JAPAN
LOT NO.
A NO.
DIP
CN1
CN2
CN3
CN4
A
B
C
D
E
F
G
H
J
K
1
2
3

1-628-206-12 COMPONENT SIDE

1-628-206-12 SOLDER SIDE

### DIF-2 (1-628-206-12)

**HDD-1000**

| | |
|---|---|
| CN1 | D1 |
| CN2 | G1 |
| CN3 | F3 |
| CN4 | J3 |
| E1 | A3 |
| E2 | F2 |
| E3 | K2 |
| IC1 | B2 |
| IC2 | B2 |
| IC3 | C2 |
| IC4 | C2 |
| IC5 | D2 |
| IC6 | D2 |
| IC7 | E2 |
| IC8 | E2 |
| IC9 | F2 |
| IC10 | F2 |
| IC11 | G2 |
| IC12 | G3 |
| IC13 | H2 |
| IC14 | H3 |
| IC15 | J1 |
| IC16 | J2 |
| IC17 | J3 |
| RB1 | B1 |
| RB2 | B2 |
| RB3 | C1 |
| RB4 | B2 |
| RB5 | C2 |
| RB6 | C2 |
| RB7 | D1 |
| RB8 | C2 |
| RB9 | D2 |
| RB10 | D2 |
| RB11 | E1 |
| RB12 | E2 |
| RB13 | D2 |
| RB14 | E2 |
| RB15 | J3 |
| RB16 | E2 |
| RB17 | F2 |
| RB18 | G2 |
| RB19 | G2 |
| RB20 | H2 |
| RB21 | H2 |
| RB22 | G2 |
| RB23 | G2 |
| RB24 | J2 |
| RB25 | K2 |
| RB26 | H2 |
| RB27 | H2 |
| RB28 | J2 |
| RB29 | K2 |
| RB30 | B2 |
| RB31 | C2 |
| RB32 | D2 |
| RB33 | E2 |

## DIF-2 BOARD

S/N up to 10199

Processor Interface (Video)

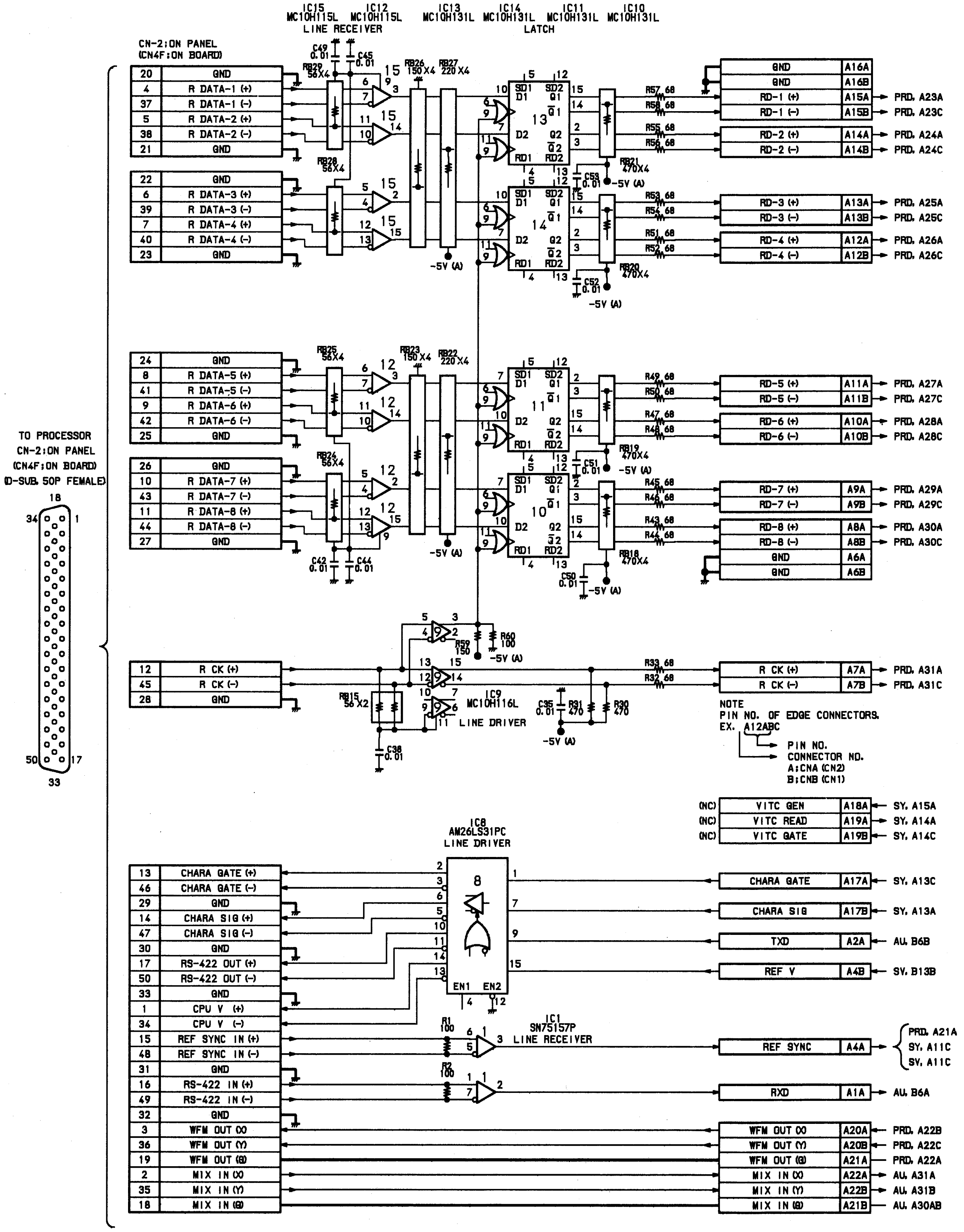
IC15 MC10H115L
IC12 MC10H115L
LINE RECEIVER
IC13 MC10H131L
IC14 MC10H131L
IC11 MC10H131L
IC10 MC10H131L
LATCH
CN-2:ON PANEL (CN4F:ON BOARD)
TO PROCESSOR CN-2:ON PANEL (CN4F:ON BOARD) (D-SUB 50P FEMALE)
R DATA-1 (+)
R DATA-1 (-)
R DATA-2 (+)
R DATA-2 (-)
R DATA-3 (+)
R DATA-3 (-)
R DATA-4 (+)
R DATA-4 (-)
R DATA-5 (+)
R DATA-5 (-)
R DATA-6 (+)
R DATA-6 (-)
R DATA-7 (+)
R DATA-7 (-)
R DATA-8 (+)
R DATA-8 (-)
R CK (+)
R CK (-)
GND
RD-1 (+) RD-1 (-) RD-2 (+) RD-2 (-)
RD-3 (+) RD-3 (-) RD-4 (+) RD-4 (-)
RD-5 (+) RD-5 (-) RD-6 (+) RD-6 (-)
RD-7 (+) RD-7 (-) RD-8 (+) RD-8 (-)
PRD. A23A PRD. A23C PRD. A24A PRD. A24C
PRD. A25A PRD. A25C PRD. A26A PRD. A26C
PRD. A27A PRD. A27C PRD. A28A PRD. A28C
PRD. A29A PRD. A29C PRD. A30A PRD. A30C
PRD. A31A PRD. A31C
-5V (A)
IC9 MC10H116L LINE DRIVER
NOTE
PIN NO. OF EDGE CONNECTORS.
EX. A12ABC
PIN NO.
CONNECTOR NO.
A:CNA (CN2)
B:CNB (CN1)
(NC) VITC GEN A18A SY. A15A
(NC) VITC READ A19A SY. A14A
(NC) VITC GATE A19B SY. A14C
IC8 AM26LS31PC LINE DRIVER
IC1 SN75157P LINE RECEIVER
CHARA GATE (+)
CHARA GATE (-)
CHARA SIG (+)
CHARA SIG (-)
RS-422 OUT (+)
RS-422 OUT (-)
CPU V (+)
CPU V (-)
REF SYNC IN (+)
REF SYNC IN (-)
RS-422 IN (+)
RS-422 IN (-)
WFM OUT (X)
WFM OUT (Y)
WFM OUT (G)
MIX IN (X)
MIX IN (Y)
MIX IN (G)
CHARA GATE A17A SY. A13C
CHARA SIG A17B SY. A13A
TXD A2A AU. B6B
REF V A4B SY. B13B
REF SYNC A4A PRD. A21A SY. A11C SY. A11C
RXD A1A AU. B6A
WFM OUT (X) A20A PRD. A22B
WFM OUT (Y) A20B PRD. A22C
WFM OUT (G) A21A PRD. A22A
MIX IN (X) A22A AU. A31A
MIX IN (Y) A22B AU. A31B
MIX IN (G) A21B AU. A30AB

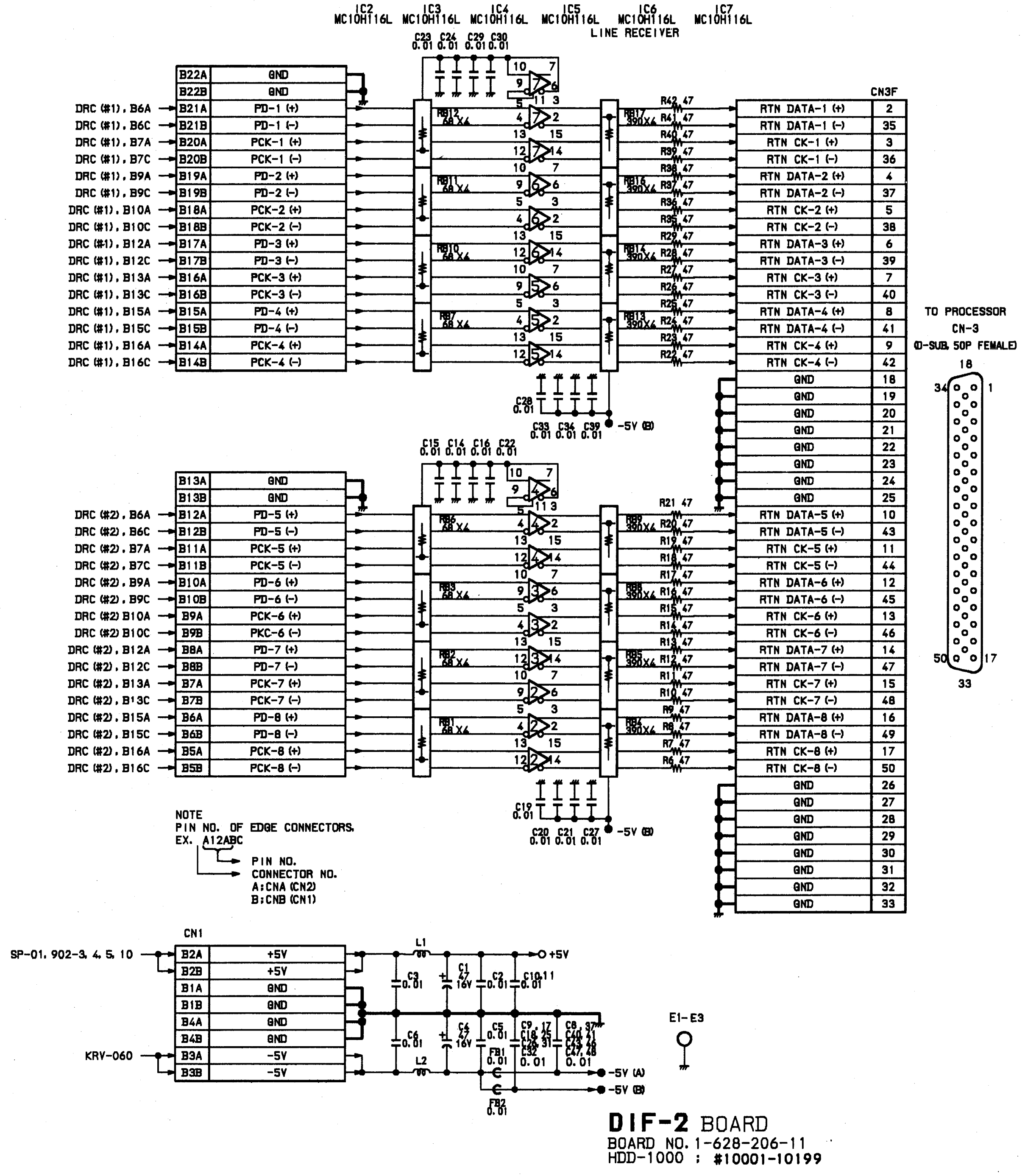
IC2 MC10H116L
IC3 MC10H116L
IC4 MC10H116L
IC5 MC10H116L
IC6 MC10H116L
IC7 MC10H116L
LINE RECEIVER
DRC (#1). B6A ... DRC (#1). B16C
DRC (#2). B6A ... DRC (#2). B16C
PD-1 (+) PD-1 (-) PCK-1 (+) PCK-1 (-)
PD-2 (+) PD-2 (-) PCK-2 (+) PCK-2 (-)
PD-3 (+) PD-3 (-) PCK-3 (+) PCK-3 (-)
PD-4 (+) PD-4 (-) PCK-4 (+) PCK-4 (-)
PD-5 (+) PD-5 (-) PCK-5 (+) PCK-5 (-)
PD-6 (+) PD-6 (-) PKC-6 (+) PKC-6 (-)
PD-7 (+) PD-7 (-) PCK-7 (+) PCK-7 (-)
PD-8 (+) PD-8 (-) PCK-8 (+) PCK-8 (-)
CN3F
RTN DATA-1 (+) RTN DATA-1 (-) RTN CK-1 (+) RTN CK-1 (-)
RTN DATA-2 (+) RTN DATA-2 (-) RTN CK-2 (+) RTN CK-2 (-)
RTN DATA-3 (+) RTN DATA-3 (-) RTN CK-3 (+) RTN CK-3 (-)
RTN DATA-4 (+) RTN DATA-4 (-) RTN CK-4 (+) RTN CK-4 (-)
RTN DATA-5 (+) RTN DATA-5 (-) RTN CK-5 (+) RTN CK-5 (-)
RTN DATA-6 (+) RTN DATA-6 (-) RTN CK-6 (+) RTN CK-6 (-)
RTN DATA-7 (+) RTN DATA-7 (-) RTN CK-7 (+) RTN CK-7 (-)
RTN DATA-8 (+) RTN DATA-8 (-) RTN CK-8 (+) RTN CK-8 (-)
GND
TO PROCESSOR CN-3 (D-SUB 50P FEMALE)
-5V (B)
NOTE
PIN NO. OF EDGE CONNECTORS.
EX. A12ABC
PIN NO.
CONNECTOR NO.
A:CNA (CN2)
B:CNB (CN1)
CN1
SP-01, 902-3, 4, 5, 10
KRV-060
+5V
GND
-5V
-5V (A)
-5V (B)
E1-E3
L1 L2 FB1 FB2

**DIF-2** BOARD
BOARD NO. 1-628-206-11
HDD-1000 : #10001-10199

## **DIF-2 BOARD**

S/N 10201 and higher

Processor Interface (Video)

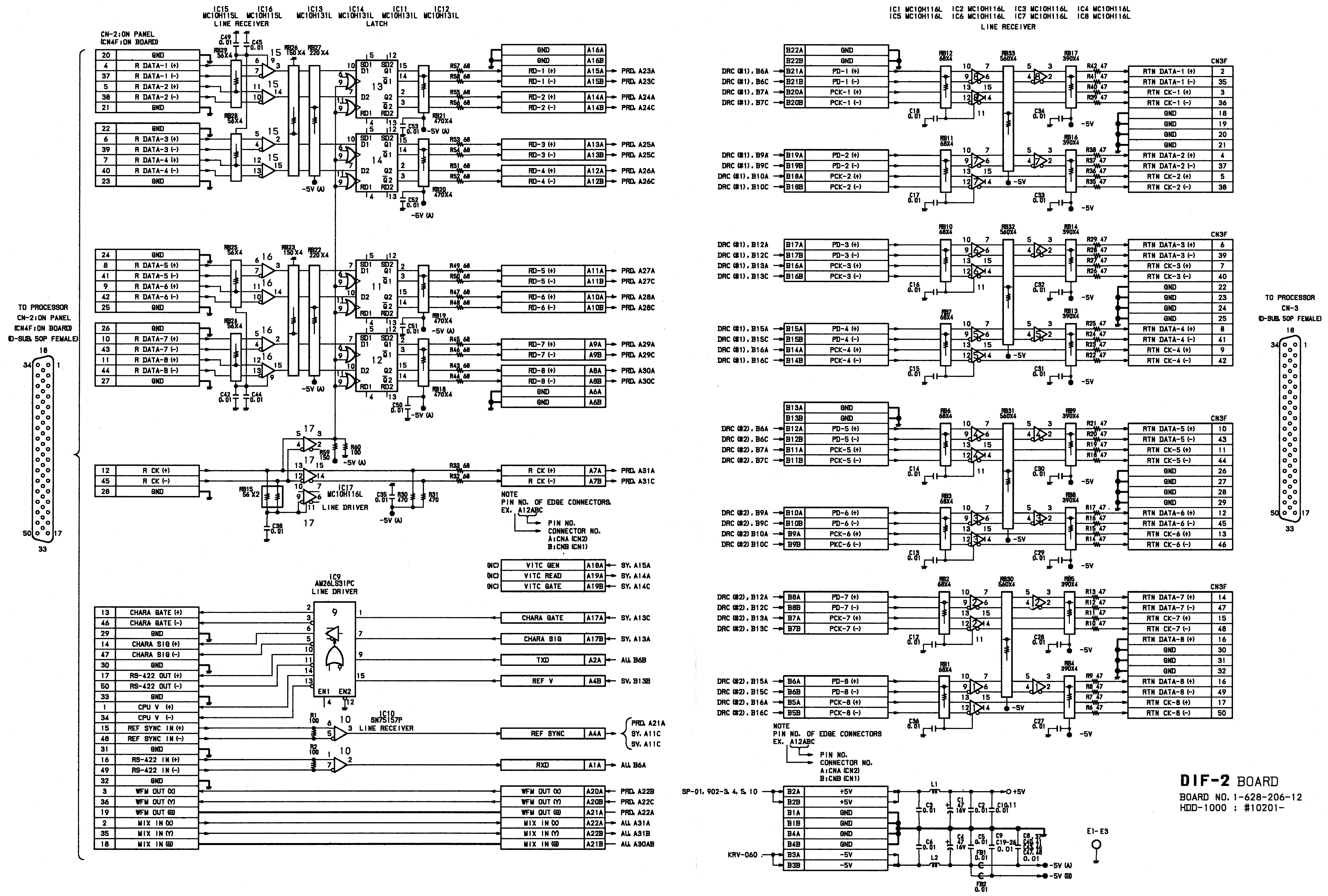
IC15 MC10H115L
IC16 MC10H115L
LINE RECEIVER
IC13 MC10H131L
IC14 MC10H131L
IC11 MC10H131L
IC12 MC10H131L
LATCH
CN-2:ON PANEL (CN4F:ON BOARD)
TO PROCESSOR CN-2:ON PANEL (CN4F:ON BOARD) (D-SUB, 50P FEMALE)
R DATA-1 (+)
R DATA-1 (-)
R DATA-2 (+)
R DATA-2 (-)
R DATA-3 (+)
R DATA-3 (-)
R DATA-4 (+)
R DATA-4 (-)
R DATA-5 (+)
R DATA-5 (-)
R DATA-6 (+)
R DATA-6 (-)
R DATA-7 (+)
R DATA-7 (-)
R DATA-8 (+)
R DATA-8 (-)
GND
R CK (+)
R CK (-)
IC17 MC10H116L LINE DRIVER
RD-1 (+)
RD-1 (-)
RD-2 (+)
RD-2 (-)
RD-3 (+)
RD-3 (-)
RD-4 (+)
RD-4 (-)
RD-5 (+)
RD-5 (-)
RD-6 (+)
RD-6 (-)
RD-7 (+)
RD-7 (-)
RD-8 (+)
RD-8 (-)
PRO. A23A
PRO. A23C
PRO. A24A
PRO. A24C
PRO. A25A
PRO. A25C
PRO. A26A
PRO. A26C
PRO. A27A
PRO. A27C
PRO. A28A
PRO. A28C
PRO. A29A
PRO. A29C
PRO. A30A
PRO. A30C
PRO. A31A
PRO. A31C
NOTE
PIN NO. OF EDGE CONNECTORS
EX. A12ABC
PIN NO.
CONNECTOR NO.
A:CNA (CN2)
B:CNB (CN1)
VITC GEN
VITC READ
VITC GATE
SY. A15A
SY. A14A
SY. A14C
IC9 AM26LS31PC LINE DRIVER
IC10 SN75157P LINE RECEIVER
CHARA GATE (+)
CHARA GATE (-)
CHARA SIG (+)
CHARA SIG (-)
RS-422 OUT (+)
RS-422 OUT (-)
CPU V (+)
CPU V (-)
REF SYNC IN (+)
REF SYNC IN (-)
RS-422 IN (+)
RS-422 IN (-)
WFM OUT (X)
WFM OUT (Y)
WFM OUT (B)
MIX IN (X)
MIX IN (Y)
MIX IN (B)
CHARA GATE
CHARA SIG
TXD
REF V
REF SYNC
RXD
SY. A13C
SY. A13A
AU. B6B
SY. B13B
PRO. A21A
SY. A11C
SY. A11C
AU. B6A
PRO. A22B
PRO. A22C
PRO. A22A
AU. A31A
AU. A31B
AU. A30AB
IC1 MC10H116L
IC2 MC10H116L
IC3 MC10H116L
IC4 MC10H116L
IC5 MC10H116L
IC6 MC10H116L
IC7 MC10H116L
IC8 MC10H116L
LINE RECEIVER
DRC (#1), B6A
DRC (#1), B6C
DRC (#1), B7A
DRC (#1), B7C
PD-1 (+)
PD-1 (-)
PCK-1 (+)
PCK-1 (-)
PD-2 (+)
PD-2 (-)
PCK-2 (+)
PCK-2 (-)
PD-3 (+)
PD-3 (-)
PCK-3 (+)
PCK-3 (-)
PD-4 (+)
PD-4 (-)
PCK-4 (+)
PCK-4 (-)
PD-5 (+)
PD-5 (-)
PCK-5 (+)
PCK-5 (-)
PD-6 (+)
PD-6 (-)
PCK-6 (+)
PKC-6 (-)
PD-7 (+)
PD-7 (-)
PCK-7 (+)
PCK-7 (-)
PD-8 (+)
PD-8 (-)
PCK-8 (+)
PCK-8 (-)
CN3F
RTN DATA-1 (+)
RTN DATA-1 (-)
RTN CK-1 (+)
RTN CK-1 (-)
RTN DATA-2 (+)
RTN DATA-2 (-)
RTN CK-2 (+)
RTN CK-2 (-)
RTN DATA-3 (+)
RTN DATA-3 (-)
RTN CK-3 (+)
RTN CK-3 (-)
RTN DATA-4 (+)
RTN DATA-4 (-)
RTN CK-4 (+)
RTN CK-4 (-)
RTN DATA-5 (+)
RTN DATA-5 (-)
RTN CK-5 (+)
RTN CK-5 (-)
RTN DATA-6 (+)
RTN DATA-6 (-)
RTN CK-6 (+)
RTN CK-6 (-)
RTN DATA-7 (+)
RTN DATA-7 (-)
RTN CK-7 (+)
RTN CK-7 (-)
RTN DATA-8 (+)
RTN DATA-8 (-)
RTN CK-8 (+)
RTN CK-8 (-)
TO PROCESSOR CN-3 (D-SUB, 50P FEMALE)
SP-01, 902-3, 4, 5, 10
KRV-060
+5V
-5V
-5V (A)
-5V (B)
E1-E3

**DIF-2** BOARD
BOARD NO. 1-628-206-12
HDD-1000 ; #10201-

## IF-207 BOARD (1-628-205-11)

Component Side

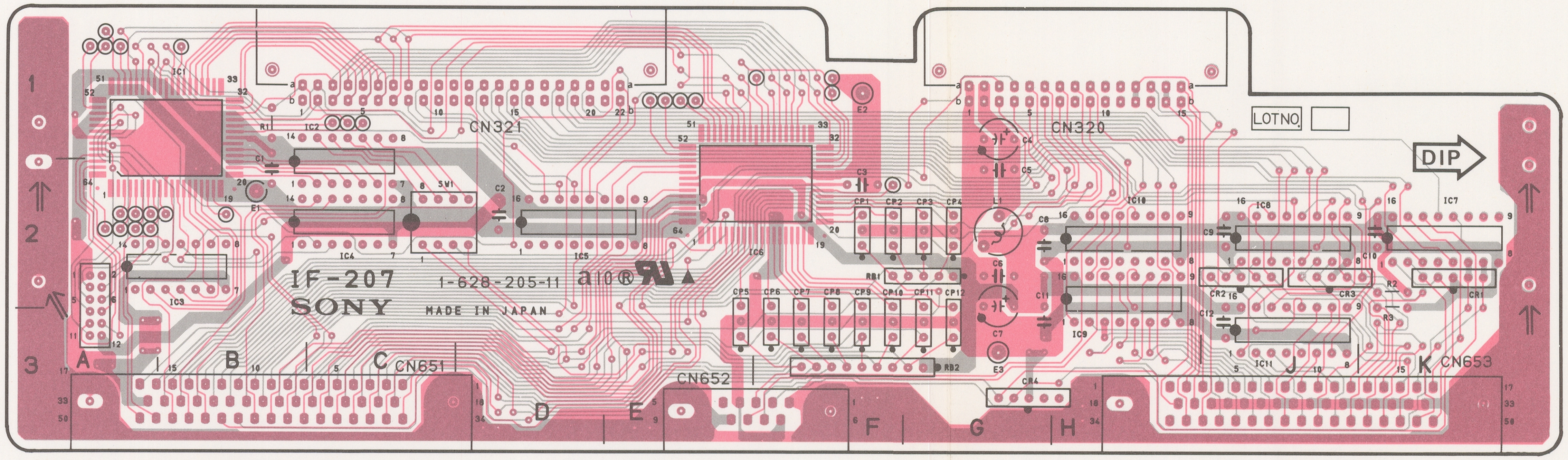
1
2
3
A
B
C
D
E
F
G
H
J
K
CN321
CN320
CN651
CN652
CN653
IC1
IC2
IC3
IC4
IC5
IC6
IC7
IC8
IC9
IC10
IC11
SW1
E1
E2
E3
L1
CP1
CP2
CP3
CP4
CP5
CP6
CP7
CP8
CP9
CP10
CP11
CP12
RB1
RB2
CR1
CR2
CR3
CR4
IF-207
SONY
1-628-205-11
MADE IN JAPAN
LOTNO.
DIP

1-628-205-11 COMPONENT SIDE

1-628-205-11 SOLDER SIDE

**IF-207 (1-628-205-11)**

**HDD-1000**

| | |
|---|---|
| CN320 | H1 |
| CN321 | D1 |
| CN651 | C3 |
| CN652 | E3 |
| CN653 | K3 |
| CP1 | F2 |
| CP2 | F2 |
| CP3 | G2 |
| CP4 | G2 |
| CP5 | E2 |
| CP6 | F2 |
| CP7 | F2 |
| CP8 | F2 |
| CP9 | F2 |
| CP10 | F2 |
| CP11 | G2 |
| CP12 | G2 |
| CR1 | H2 |
| CR2 | J2 |
| CR3 | J2 |
| CR4 | G3 |
| E1 | B2 |
| E2 | F1 |
| E3 | G3 |
| IC1 | B1 |
| IC2 | C1 |
| IC3 | B2 |
| IC4 | C2 |
| IC5 | D2 |
| IC6 | F2 |
| IC7 | H2 |
| IC8 | J2 |
| IC9 | K2 |
| IC10 | H3 |
| IC11 | J3 |
| RB1 | F2 |
| RB2 | G3 |
| SW1 | C2 |

# IF-207 BOARD

## Processor Interface (Audio & System)

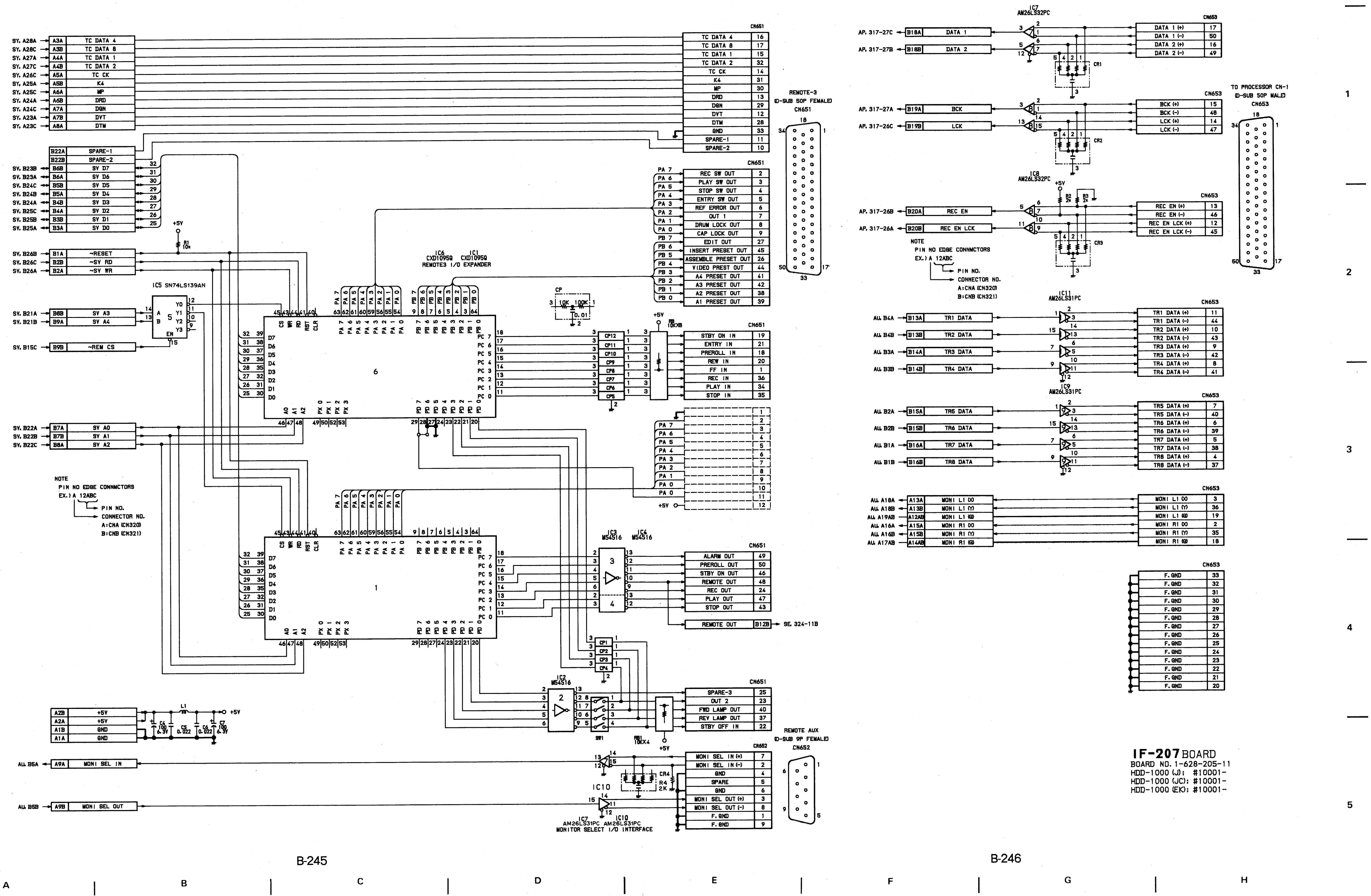
IC6 CXD1095Q IC1 CXD1095Q
REMOTE3 I/O EXPANDER
IC5 SN74LS139AN
IC3 M54516 IC4 M54516
IC2 M54516
IC7 AM26LS32PC
IC8 AM26LS32PC
IC11 AM26LS31PC
IC9 AM26LS31PC
IC7 AM26LS31PC IC10 AM26LS31PC
MONITOR SELECT I/O INTERFACE
CN651
CN652
CN653
REMOTE-3 (D-SUB 50P FEMALE) CN651
TO PROCESSOR CN-1 (D-SUB 50P MALE) CN653
REMOTE AUX (D-SUB 9P FEMALE) CN652
NOTE
PIN NO EDGE CONNECTORS
EX.) A 12ABC
PIN NO.
CONNECTOR NO.
A:CNA (CN320)
B:CNB (CN321)
SE 324-11B
+5V
SW1
RB1 10KX4
CR1
CR2
CR3
CR4
R4 2K
L1
A
B
C
D
E
F
G
H
1
2
3
4
5

**IF-207** BOARD
BOARD NO. 1-628-205-11
HDD-1000 (J); #10001-
HDD-1000 (JC); #10001-
HDD-1000 (EK); #10001-

## **LO-06** BOARD (1-628-204-11)

Component Side

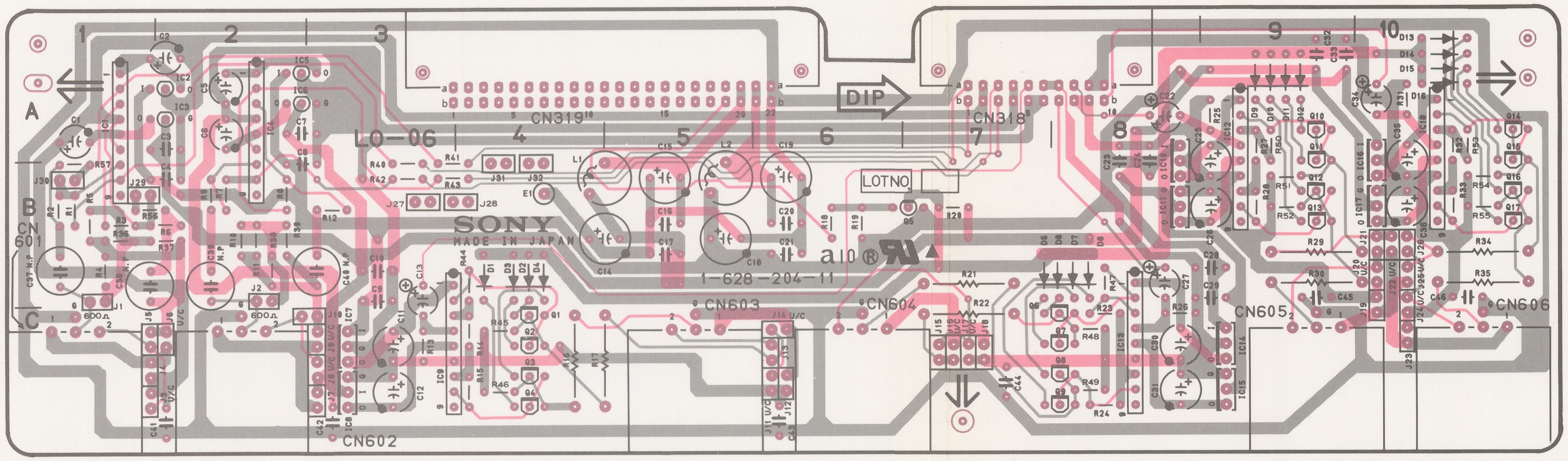
1
2
3
4
5
6
7
8
9
10
A
B
C
CN601
CN602
CN603
CN604
CN605
CN606
CN318
CN319
DIP
LO-06
LOTNO
SONY
MADE IN JAPAN
1-628-204-11

1-628-204-11 COMPONENT SIDE

1-628-204-11 SOLDER SIDE

### LO-06 (1-628-204-11)

**HDD-1000**

| | |
|---|---|
| CN318 | A7 |
| CN319 | A4 |
| CN601 | B1 |
| CN602 | C3 |
| CN603 | B5 |
| CN604 | B6 |
| CN605 | B9 |
| CN606 | B10 |
| D1 | B4 |
| D2 | B4 |
| D3 | B4 |
| D4 | B4 |
| D5 | B7 |
| D6 | B8 |
| D7 | B8 |
| D8 | B8 |
| D9 | A9 |
| D10 | A9 |
| D11 | A9 |
| D12 | A9 |
| D13 | A10 |
| D14 | A10 |
| D15 | A10 |
| D16 | A10 |
| IC1 | A1 |
| IC2 | A2 |
| IC3 | A2 |
| IC4 | A2 |
| IC5 | A2 |
| IC6 | A2 |
| IC7 | B3 |
| IC8 | C3 |
| IC9 | C3 |
| IC10 | B8 |
| IC11 | B8 |
| IC12 | A9 |
| IC13 | C8 |
| IC14 | C9 |
| IC15 | C9 |
| IC16 | B10 |
| IC17 | B10 |
| IC18 | A10 |
| J1 | B1 |
| J2 | B2 |
| J3 | C1 |
| J6 | B2 |
| J8 | C3 |
| J9 | C3 |
| J11 | C6 |
| J14 | B6 |
| J16 | C7 |
| J17 | C7 |
| J20 | B10 |
| J22 | B10 |
| J24 | B10 |
| J25 | B10 |
| J27 | B3 |
| J28 | B4 |
| J29 | B1 |
| J30 | B1 |
| J31 | B4 |
| J32 | B4 |
| JS1 | B1 |
| JS2 | B2 |
| JS3 | B3 |
| JS4 | B4 |
| Q1 | B4 |
| Q2 | C4 |
| Q3 | C4 |
| Q4 | C4 |
| Q5 | B7 |
| Q6 | B7 |
| Q7 | C8 |
| Q8 | C8 |
| Q9 | C8 |
| Q10 | A9 |
| Q11 | A9 |
| Q12 | B9 |
| Q13 | B9 |
| Q14 | A10 |
| Q15 | A10 |
| Q16 | B10 |
| Q17 | B10 |

## **LO-06** BOARD

CUE/TC I/O & Audio Monitor Output Amplifier

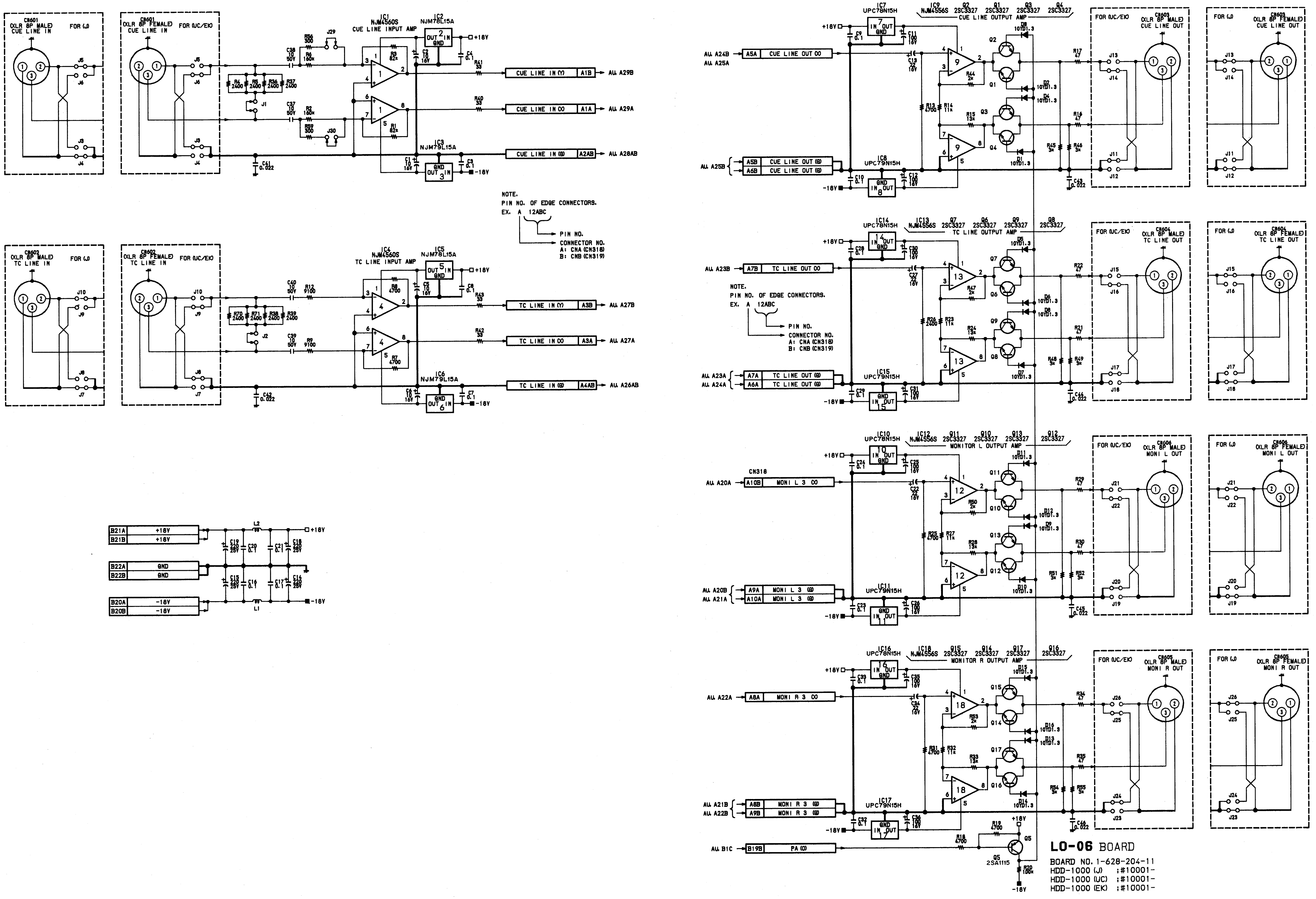
CN601 (XLR 3P MALE) CUE LINE IN FOR (J)
CN601 (XLR 3P FEMALE) CUE LINE IN FOR (UC/EK)
IC1 NJM4560S CUE LINE INPUT AMP
IC2 NJM78L15A
IC3 NJM79L15A
CUE LINE IN (Y) A1B → AU A29B
CUE LINE IN (X) A1A → AU A29A
CUE LINE IN (G) A2AB → AU A28AB
NOTE.
PIN NO. OF EDGE CONNECTORS.
EX. A 12ABC
PIN NO.
CONNECTOR NO.
A: CNA (CN318)
B: CNB (CN319)
CN602 (XLR 3P MALE) TC LINE IN FOR (J)
CN602 (XLR 3P FEMALE) TC LINE IN FOR (UC/EK)
IC4 NJM4560S TC LINE INPUT AMP
IC5 NJM78L15A
IC6 NJM79L15A
TC LINE IN (Y) A3B → AU A27B
TC LINE IN (X) A3A → AU A27A
TC LINE IN (G) A4AB → AU A26AB
B21A +18V
B21B +18V
B22A GND
B22B GND
B20A -18V
B20B -18V
L1
L2
+18V
-18V
IC7 UPC78N15H
IC8 UPC79N15H
IC9 NJM4556S
Q1 Q2 Q3 Q4 2SC3327
CUE LINE OUTPUT AMP
AU A24B → A5A CUE LINE OUT (X)
AU A25A
AU A25B → A5B CUE LINE OUT (G), A6B CUE LINE OUT (G)
CN603 (XLR 3P MALE) CUE LINE OUT FOR (UC/EK)
CN603 (XLR 3P FEMALE) CUE LINE OUT FOR (J)
IC13 NJM4556S
IC14 UPC78N15H
IC15 UPC79N15H
Q6 Q7 Q8 Q9 2SC3327
TC LINE OUTPUT AMP
AU A23B → A7B TC LINE OUT (X)
AU A23A → A7A TC LINE OUT (G)
AU A24A → A6A TC LINE OUT (G)
CN604 (XLR 3P MALE) TC LINE OUT FOR (UC/EK)
CN604 (XLR 3P FEMALE) TC LINE OUT FOR (J)
IC10 UPC78N15H
IC11 UPC79N15H
IC12 NJM4556S
Q10 Q11 Q12 Q13 2SC3327
MONITOR L OUTPUT AMP
CN318
AU A20A → A10B MONI L 3 (X)
AU A20B → A9A MONI L 3 (G)
AU A21A → A10A MONI L 3 (G)
CN606 (XLR 3P MALE) MONI L OUT FOR (UC/EK)
CN606 (XLR 3P FEMALE) MONI L OUT FOR (J)
IC16 UPC78N15H
IC17 UPC79N15H
IC18 NJM4556S
Q14 Q15 Q16 Q17 2SC3327
MONITOR R OUTPUT AMP
AU A22A → A8A MONI R 3 (X)
AU A21B → A8B MONI R 3 (G)
AU A22B → A9B MONI R 3 (G)
CN605 (XLR 3P MALE) MONI R OUT FOR (UC/EK)
CN605 (XLR 3P FEMALE) MONI R OUT FOR (J)
AU B1C → B19B PA (X)
Q5 2SA1115
LO-06 BOARD
BOARD NO. 1-628-204-11
HDD-1000 (J) ;#10001-
HDD-1000 (UC) ;#10001-
HDD-1000 (EK) ;#10001-
1
2
3
4
5

## **SP-01** BOARD (1-621-602-12)

Component Side

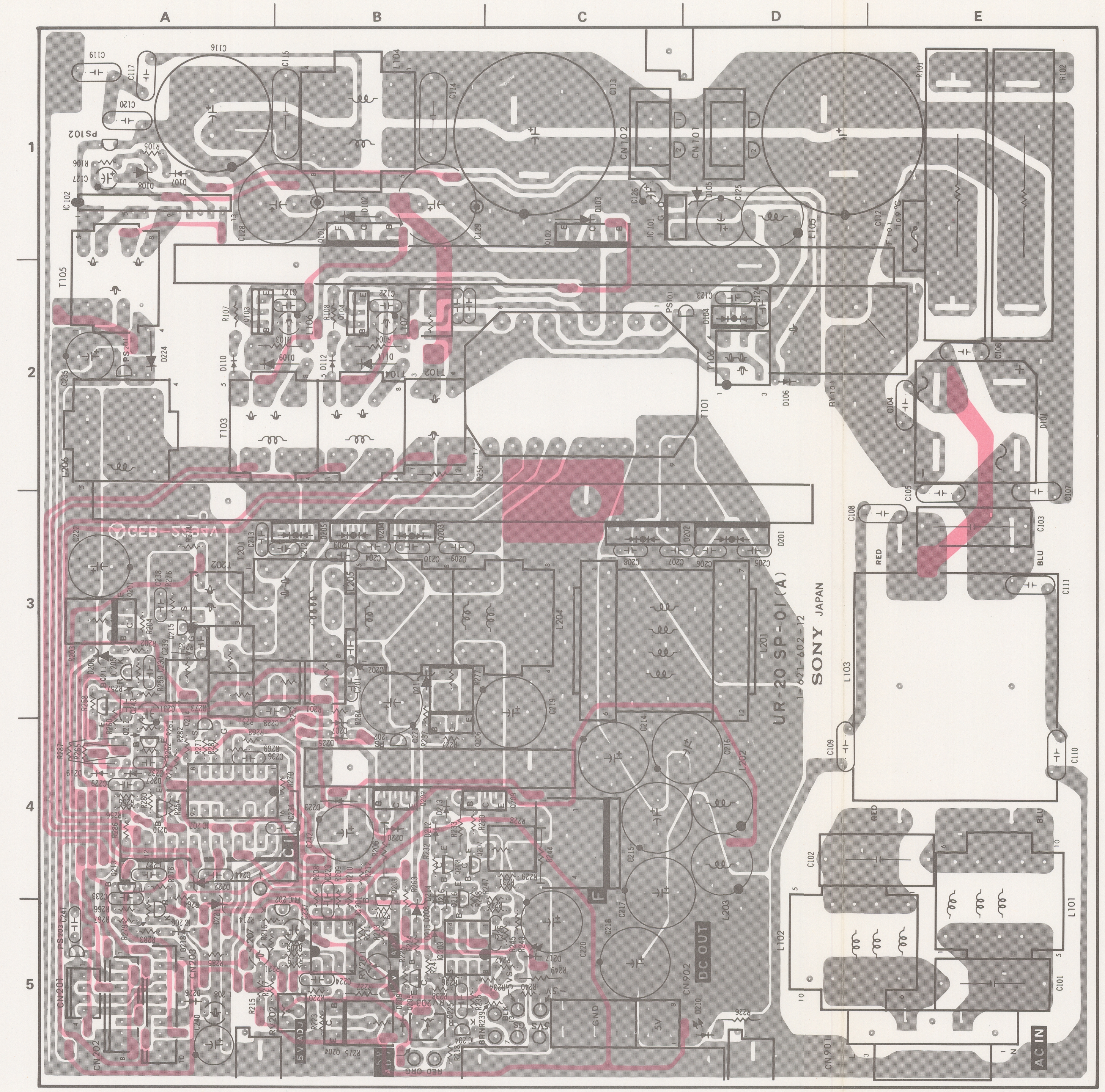
A
B
C
D
E
1
2
3
4
5
UR-20 SP-01(A)
1-621-602-12
SONY
JAPAN
DC OUT
AC IN
5V ADJ
GND
5V
RED
BLU
CN901
CN902
T101
T102
T103
T104
T105
L101
L102
L103
L201
L202
L203
L204
RY101
F101

1-621-602-12 COMPONENT SIDE

1-621-602-12 SOLDER SIDE

**SP-01 (1-621-602-12)**

**HDD-1000**

| | |
|---|---|
| CN101 | D1 |
| CN102 | C1 |
| CN201 | A5 |
| CN202 | A5 |
| CN203 | A5 |
| CN901 | E5 |
| CN902 | D5 |
| D101 | E2 |
| D102 | B1 |
| D103 | C1 |
| D104 | D2 |
| D105 | D1 |
| D106 | D2 |
| D107 | B1 |
| D108 | A1 |
| D109 | B2 |
| D110 | A2 |
| D111 | B2 |
| D112 | B2 |
| D201 | D3 |
| D202 | C3 |
| D203 | B3 |
| D204 | B3 |
| D205 | B3 |
| D206 | A3 |
| D207 | B4 |
| D208 | B5 |
| D209 | B5 |
| D210 | D5 |
| D211 | B3 |
| D212 | B4 |
| D213 | B4 |
| D214 | B5 |
| D215 | B5 |
| D217 | C5 |
| D218 | A5 |
| D219 | A4 |
| D220 | B4 |
| D221 | A5 |
| D222 | A4 |
| D223 | B4 |
| D224 | A2 |
| D225 | B4 |
| D226 | A5 |
| D227 | A4 |
| IC101 | D1 |
| IC102 | A1 |
| IC201 | B5 |
| IC202 | B5 |
| IC203 | B5 |
| IC204 | B5 |
| IC205 | A3 |
| IC206 | A5 |
| IC207 | A4 |
| Q101 | B1 |
| Q102 | C1 |
| Q103 | A2 |
| Q104 | B2 |
| Q201 | A3 |
| Q202 | B4 |
| Q203 | B4 |
| Q204 | B5 |
| Q205 | B5 |
| Q206 | B4 |
| Q207 | C4 |
| Q208 | B4 |
| Q209 | C4 |
| Q210 | A4 |
| Q211 | A3 |
| Q212 | A4 |
| Q213 | A4 |
| Q214 | A4 |
| Q215 | A3 |
| Q216 | B5 |
| RV201 | B5 |
| RV202 | B5 |
| RV203 | B5 |
| RY101 | D2 |

## **UR-20-C1** BOARD (1-621-600-11)

Component Side

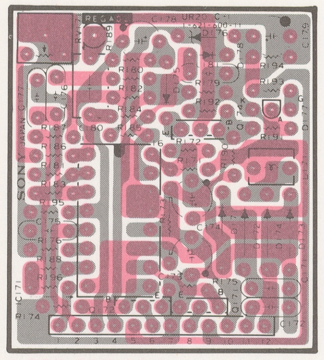

1-621-600-11
COMPONENT SIDE

1-621-600-11
SOLDER SIDE

## **UR-20-F** BOARD (1-617-869-11)

Component Side

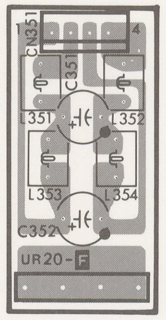
CN351
C351
L351
L352
L353
L354
C352
UR20-F

1-617-869-11
SOLDER SIDE

## SP-01 BOARD

Switching Regulator

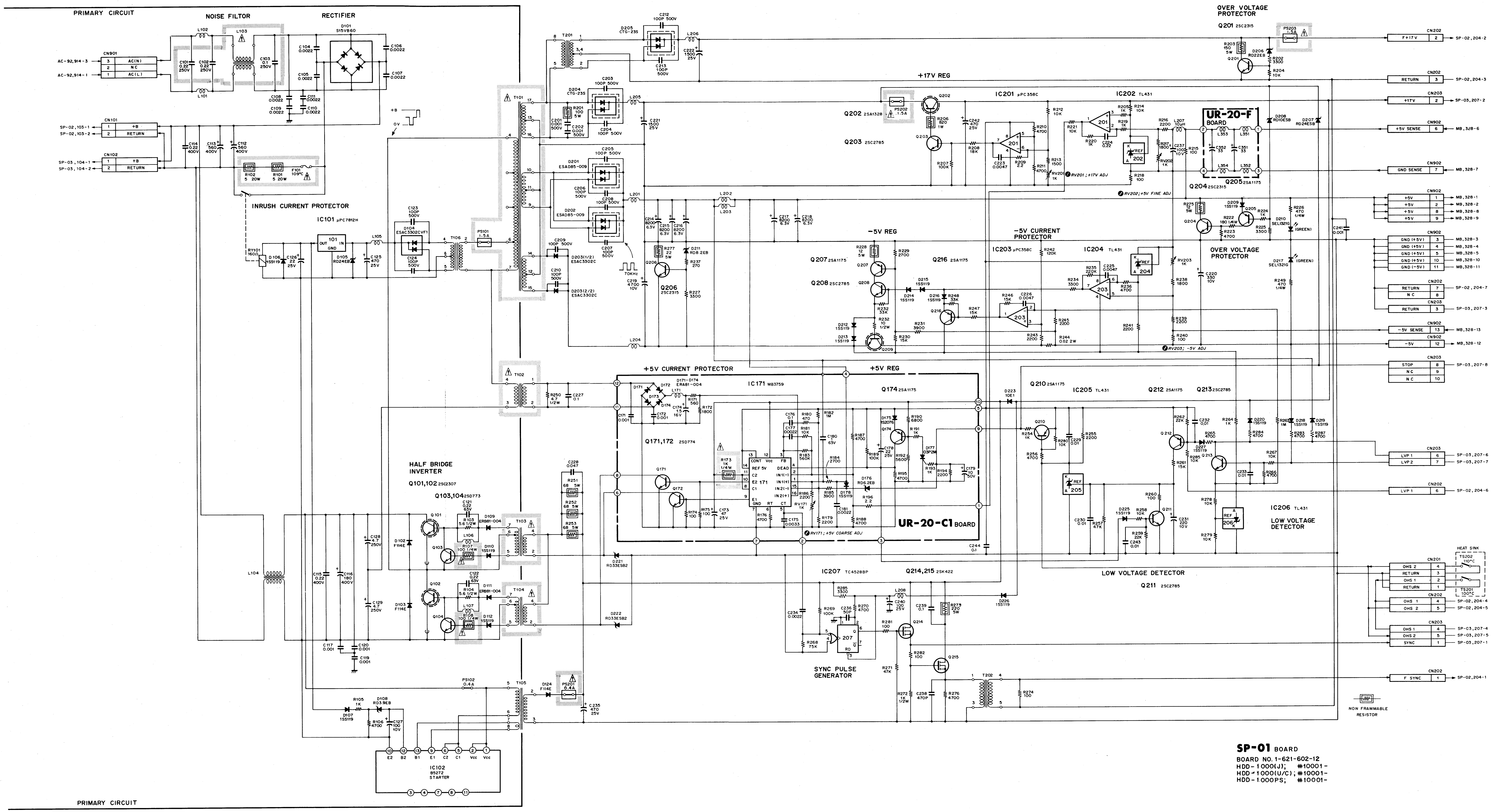
PRIMARY CIRCUIT
NOISE FILTOR
RECTIFIER
D101 S15VB60
CN901
AC-92,914-3
AC-92,914-1
AC(N)
N C
AC(L)
CN101
SP-02,103-1
SP-02,103-2
+B
RETURN
CN102
SP-03,104-1
SP-03,104-2
INRUSH CURRENT PROTECTOR
IC101 μPC7812H
RY101
T106
PS101 1.5A
T101
T201
D205 CTG-23S
D204 CTG-23S
D201 ESAD85-009
D202 ESAD85-009
D203(1/2) ESAC33O2C
D203(2/2) ESAC33O2C
70KHz
T102
HALF BRIDGE INVERTER
Q101,102 2SC2307
Q103,104 2SD773
T103
T104
T105
PS102 0.4A
PS201 0.4A
IC102 B5272 STARTER
E2 B2 B1 E1 C2 C1 Vcc Vcc
+17V REG
Q202 2SA1328
Q203 2SC2785
PS202 1.5A
IC201 μPC358C
IC202 TL431
UR-20-F BOARD
Q204 2SC2315
Q205 2SA1175
OVER VOLTAGE PROTECTOR
Q201 2SC2315
PS203 1.5A
RV201 ; +17V ADJ
RV202 ; +5V FINE ADJ
-5V REG
Q207 2SA1175
Q208 2SC2785
Q206 2SC2315
Q216 2SA1175
Q209
-5V CURRENT PROTECTOR
IC203 μPC358C
IC204 TL431
RV203 ; -5V ADJ
OVER VOLTAGE PROTECTOR
D210 SEL1321G (GREEN)
D217 SEL1321G (GREEN)
+5V CURRENT PROTECTOR
+5V REG
IC171 MB3759
Q171,172 2SD774
Q174 2SA1175
UR-20-C1 BOARD
RV171 ; +5V COARSE ADJ
Q210 2SA1175
IC205 TL431
Q212 2SA1175
Q213 2SC2785
IC206 TL431
LOW VOLTAGE DETECTOR
LOW VOLTAGE DETECTOR
Q211 2SC2785
IC207 TC4528BP
Q214,215 2SK422
SYNC PULSE GENERATOR
T202
CN202 F+17V 2 SP-02,204-2
CN202 RETURN 3 SP-02,204-3
CN203 +17V 2 SP-03,207-2
CN902 +5V SENSE 6 MB,328-6
CN902 GND SENSE 7 MB,328-7
CN902 +5V 1 MB,328-1
+5V 2 MB,328-2
+5V 8 MB,328-8
+5V 9 MB,328-9
CN902 GND(+5V) 3 MB,328-3
GND(+5V) 4 MB,328-4
GND(+5V) 5 MB,328-5
GND(+5V) 10 MB,328-10
GND(-5V) 11 MB,328-11
CN202 RETURN 7 SP-02,204-7
N C 8
CN203 RETURN 3 SP-03,207-3
CN902 -5V SENSE 13 MB,328-13
CN902 -5V 12 MB,328-12
CN203 STOP 8 SP-03,207-8
N C 9
N C 10
CN203 LVP 1 6 SP-03,207-6
LVP 2 7 SP-03,207-7
CN202 LVP 1 6 SP-02,204-6
HEAT SINK
TS202 110°C
TS201 100°C
CN201 OHS 2 4
RETURN 3
OHS 1 2
RETURN 1
CN202 OHS 1 4 SP-02,204-4
OHS 2 5 SP-02,204-5
CN203 OHS 1 4 SP-03,207-4
OHS 2 5 SP-03,207-5
SYNC 1 SP-03,207-1
CN202 F SYNC 1 SP-02,204-1
NON FRAMMABLE RESISTOR

**SP-01** BOARD
BOARD NO. 1-621-602-12
HDD-1000(J); #10001-
HDD-1000(U/C); #10001-
HDD-1000PS; #10001-

## SP-02 BOARD (1-621-603-11)

Component Side

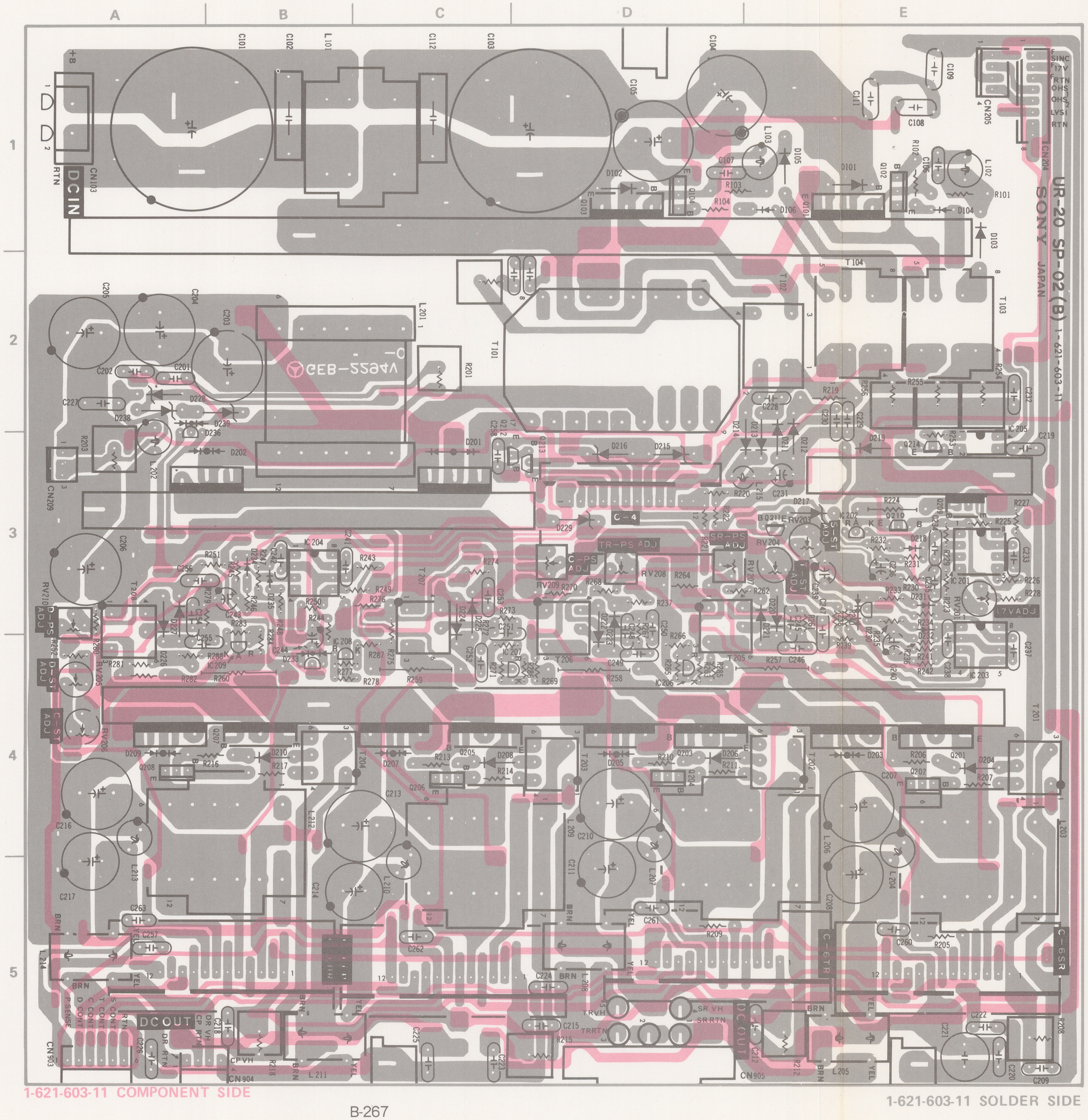
A
B
C
D
E
1
2
3
4
5
DC IN
DC OUT
DC OUT
SONY
UR-20 SP-02 (B) 1-621-603-11
JAPAN
C-4
TR-PS ADJ
SR-PS ADJ
C-PS ADJ
S-ST ADJ
T-ST ADJ
17V ADJ
D-PS ADJ
D-ST ADJ
C-ST ADJ
C-6TR
C-6SR
BRN
YEL
RTN

1-621-603-11 COMPONENT SIDE

1-621-603-11 SOLDER SIDE

### SP-02 (1-621-603-11)

**HDD-1000**

| | |
|---|---|
| CN103 | A1 |
| CN204 | E1 |
| CN205 | E1 |
| CN209 | E1 |
| CN903 | E1 |
| CN904 | E1 |
| CN905 | E1 |
| D101 | E1 |
| D102 | D1 |
| D103 | E1 |
| D104 | E1 |
| D105 | D1 |
| D106 | D1 |
| D201 | C3 |
| D202 | B3 |
| D203 | E4 |
| D205 | D4 |
| D206 | D4 |
| D207 | C4 |
| D208 | C4 |
| D209 | A4 |
| D210 | B4 |
| D211 | D3 |
| D212 | D3 |
| D213 | D3 |
| D214 | D3 |
| D215 | D3 |
| D216 | D3 |
| D217 | D3 |
| D218 | E3 |
| D219 | E3 |
| D220 | D3 |
| D221 | D3 |
| D222 | D3 |
| D223 | D3 |
| D224 | C3 |
| D225 | C3 |
| D226 | A3 |
| D227 | A3 |
| D228 | A2 |
| D229 | C3 |
| D230 | E3 |
| D231 | E3 |
| D232 | E3 |
| D233 | B4 |
| D234 | B3 |
| D235 | B3 |
| D236 | A2 |
| D238 | A2 |
| D239 | B2 |
| D240 | E4 |
| IC201 | E3 |
| IC202 | E3 |
| IC203 | E4 |
| IC204 | B3 |
| IC205 | E3 |
| IC206 | D4 |
| IC207 | C4 |
| IC208 | B4 |
| IC209 | B4 |
| Q101 | E1 |
| Q102 | E1 |
| Q103 | D1 |
| Q104 | D1 |
| Q201 | E4 |
| Q202 | E4 |
| Q203 | D4 |
| Q204 | D4 |
| Q205 | C4 |
| Q206 | D3 |
| Q207 | B4 |
| Q208 | A4 |
| Q209 | E3 |
| Q210 | E3 |
| Q211 | D3 |
| Q212 | C3 |
| Q213 | C3 |
| Q214 | E3 |
| RV201 | E3 |
| RV203 | D3 |
| RV204 | D3 |
| RV205 | A4 |
| RV206 | A4 |
| RV207 | D3 |
| RV208 | D3 |
| RV209 | C3 |
| RV210 | A3 |

## UR-20-C4 BOARD (1-622-674-11)

Component Side

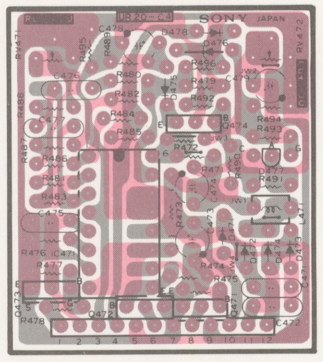

1-622-674-11
SOLDER SIDE

1-622-674-11
COMPONENT SIDE

## UR-20-C6 BOARD (1-621-601-11)

Component Side

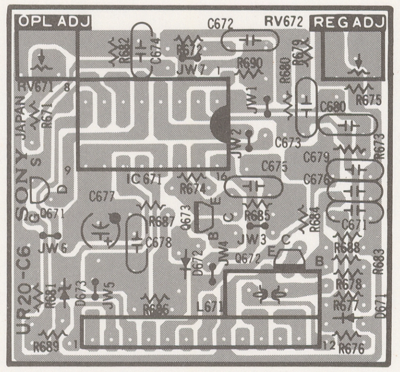
OPL ADJ
REG ADJ
RV672
UR20-C6 SONY JAPAN
IC671

1-621-601-11 SOLDER SIDE

## SP-02 BOARD
Switching Regulator

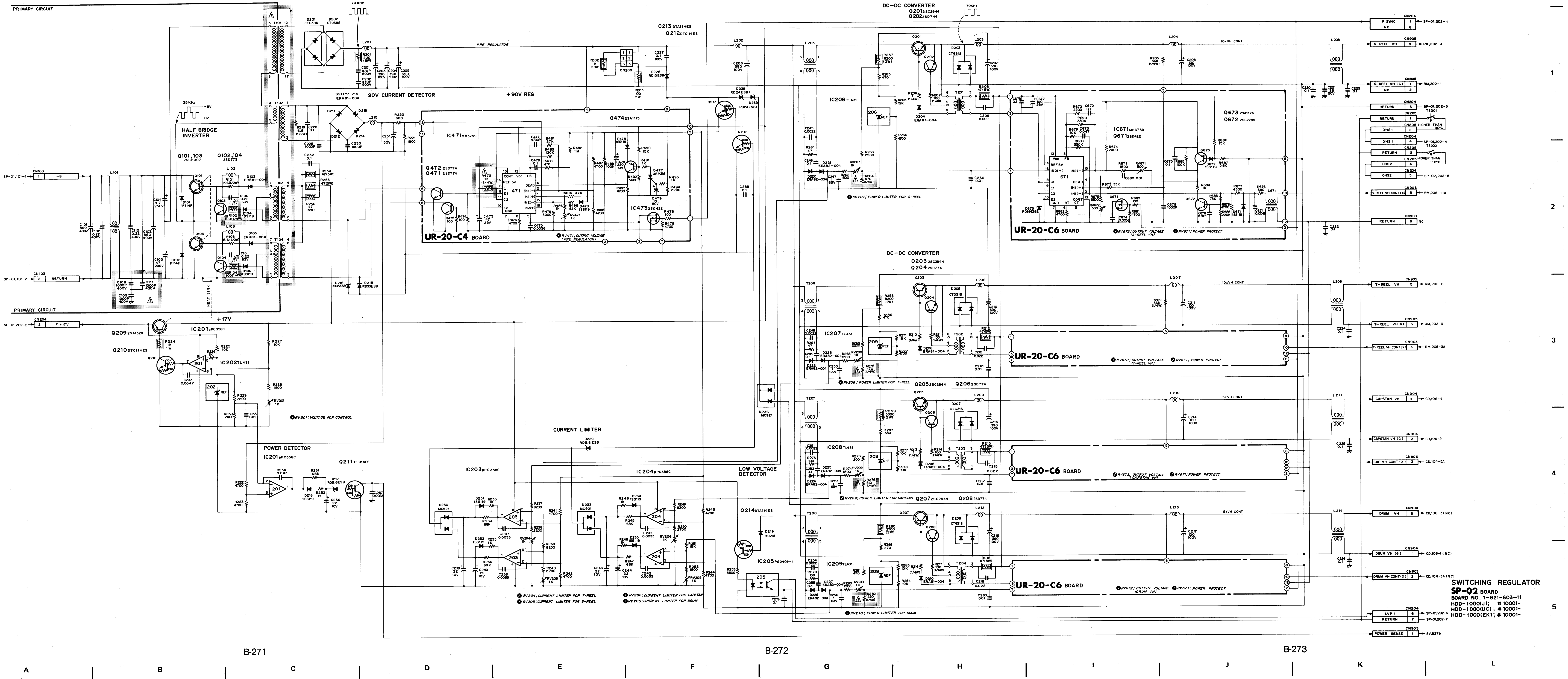
PRIMARY CIRCUIT
HALF BRIDGE INVERTER
Q101,103 2SC2307
Q102,104 2SD773
90V CURRENT DETECTOR
+90V REG
PRE REGULATOR
IC471 MB3759
Q472 2SD774
Q471 2SD774
Q474 2SA1175
IC473 2SK422
UR-20-C4 BOARD
RV471; OUTPUT VOLTAGE (PRE REGULATOR)
Q213 DTA114ES
Q212 DTC114ES
DC-DC CONVERTER
Q201 2SC2944
Q202 2SD744
IC206 TL431
RV207; POWER LIMITER FOR S-REEL
IC671 MB3759
Q671 2SK422
Q673 2SA1175
Q672 2SC2785
UR-20-C6 BOARD
RV672; OUTPUT VOLTAGE (S-REEL VH)
RV671; POWER PROTECT
10xVH CONT
DC-DC CONVERTER
Q203 2SC2944
Q204 2SD774
IC207 TL431
RV208; POWER LIMITER FOR T-REEL
RV672; OUTPUT VOLTAGE (T-REEL VH)
Q205 2SC2944
Q206 2SD774
5xVH CONT
IC208 TL431
RV209; POWER LIMITER FOR CAPSTAN
RV672; OUTPUT VOLTAGE (CAPSTAN VH)
Q207 2SC2944
Q208 2SD774
IC209 TL431
RV210; POWER LIMITER FOR DRUM
RV672; OUTPUT VOLTAGE (DRUM VH)
+17V
Q209 2SA1328
Q210 DTC114ES
IC201 μPC358C
IC202 TL431
RV201; VOLTAGE FOR CONTROL
POWER DETECTOR
IC201 μPC358C
Q211 DTC114ES
CURRENT LIMITER
IC203 μPC358C
IC204 μPC358C
RV204; CURRENT LIMITER FOR T-REEL
RV203; CURRENT LIMITER FOR S-REEL
RV206; CURRENT LIMITER FOR CAPSTAN
RV205; CURRENT LIMITER FOR DRUM
LOW VOLTAGE DETECTOR
Q214 DTA114ES
IC205 PS2401-1
D236 MC921
70KHz
35KHz
HEAT SINK
SP-01,101-1
SP-01,101-2
SP-01,202-2
F SYNC
S-REEL VH
S-REEL VH (G)
RETURN
OHS1
OHS2
S-REEL VH CONT (X)
T-REEL VH
T-REEL VH (G)
T-REEL VH CONT (X)
CAPSTAN VH
CAPSTAN VH (G)
CAP VH CONT (X)
DRUM VH
DRUM VH (G)
DRUM VH CONT (X)
LVP 1
POWER SENSE
SP-01,202-1
RM,202-4
RM,202-1
SP-01,202-3
SP-01,202-4
SP-02,202-5
RM,208-11A
RM,202-6
RM,202-3
RM,208-3A
CD,106-4
CD,106-2
CD,104-5A
CD,106-3 (NC)
CD,106-1 (NC)
CD,104-3A (NC)
SP-01,202-6
SP-01,202-7
SV,B27b
1
2
3
4
5
A
B
C
D
E
F
G
H
I
J
K
L

SWITCHING REGULATOR
**SP-02** BOARD
BOARD NO. 1-621-603-11
HDD-1000(J); #10001-
HDD-1000(UC); #10001-
HDD-1000(EK); #10001-

## SP-03 BOARD (1-621-604-12)

Component Side

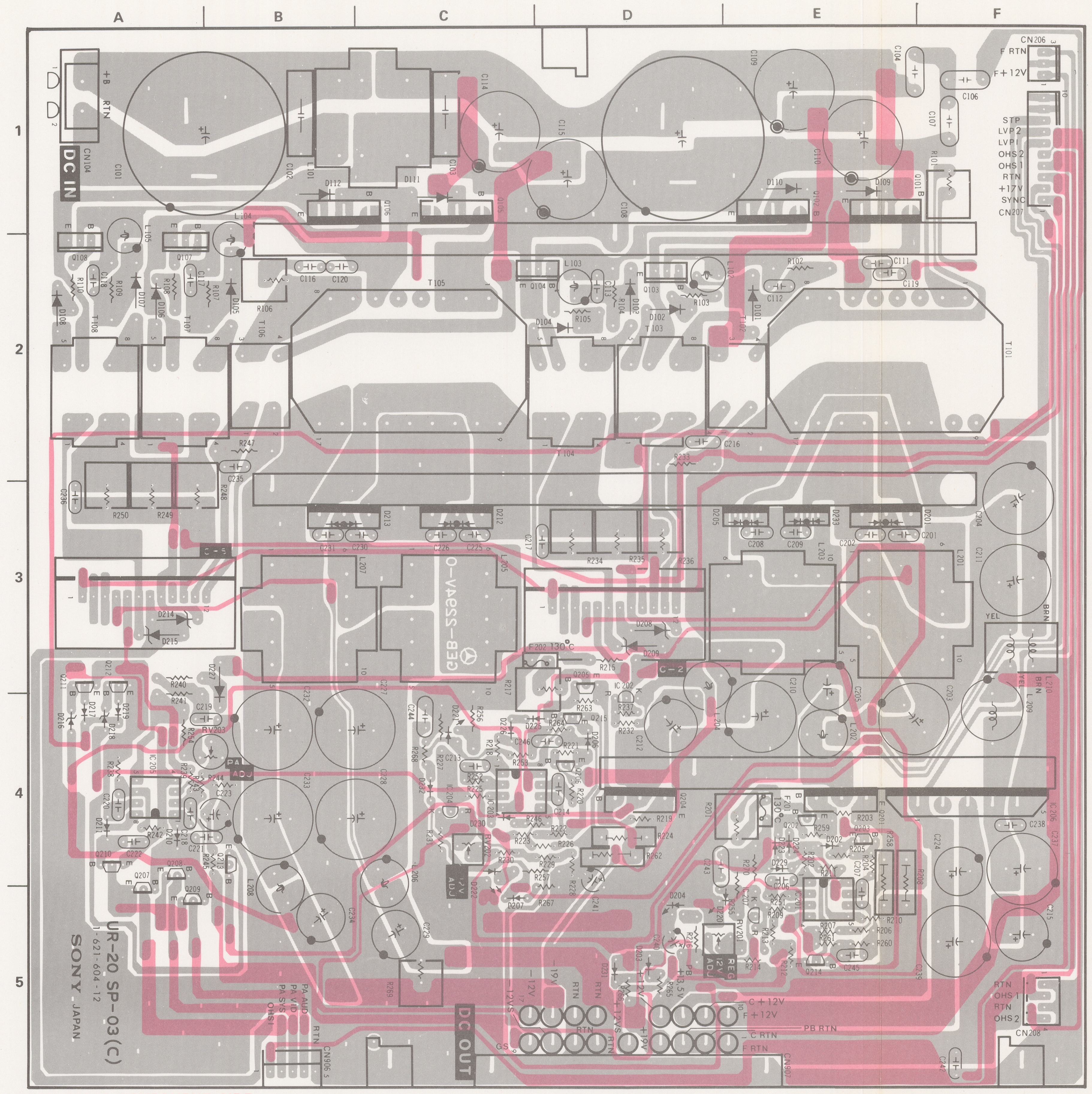
A
B
C
D
E
F
1
2
3
4
5
DC IN
CN104
+B
RTN
DC OUT
CN906
CN907
CN206
CN207
CN208
F RTN
F+12V
STP
LVP2
LVP1
OHS2
OHS1
RTN
+17V
SYNC
RTN
OHS1
RTN
OHS2
PB RTN
C+12V
F+12V
C RTN
RTN
PA ADJ
12V ADJ
REG 12V ADJ
YEL
BRN
T101
T103
T104
T105
T106
T107
T108
F202 130°C
F201 130°C
UR-20 SP-03(C)
1-621-604-12
SONY JAPAN

1-621-604-12 COMPONENT SIDE

1-621-604-12 SOLDER SIDE

**SP-03 (1-621-604-12)**

**HDD-1000**

| | |
|---|---|
| CN104 | A1 |
| CN206 | F1 |
| CN207 | F1 |
| CN208 | F5 |
| CN906 | B5 |
| CN907 | E5 |
| D101 | E2 |
| D102 | D2 |
| D103 | D2 |
| D104 | D2 |
| D105 | B2 |
| D106 | A2 |
| D107 | A2 |
| D108 | A2 |
| D109 | E1 |
| D110 | E1 |
| D111 | C1 |
| D112 | B1 |
| D201 | E3 |
| D202 | E4 |
| D203 | D5 |
| D204 | D5 |
| D205 | E3 |
| D206 | D4 |
| D207 | C5 |
| D208 | D3 |
| D209 | D3 |
| D210 | A4 |
| D211 | A4 |
| D212 | C3 |
| D213 | B3 |
| D214 | A3 |
| D215 | A3 |
| D216 | A4 |
| D217 | A4 |
| D218 | A4 |
| D219 | A4 |
| D220 | E5 |
| D221 | C4 |
| D222 | C4 |
| D223 | E4 |
| D233 | E3 |
| (HEATSYNC) | |
| D224 | E4 |
| D225 | D4 |
| D226 | C4 |
| D227 | B3 |
| D229 | E4 |
| D230 | C4 |
| D231 | D5 |
| D232 | C4 |
| IC201 | E5 |
| IC202 | D4 |
| IC203 | C4 |
| IC204 | C4 |
| IC205 | A4 |
| IC206 | F4 |
| IC207 | E5 |
| Q101 | E1 |
| Q102 | E1 |
| Q103 | D2 |
| Q104 | D2 |
| Q105 | C1 |
| Q106 | C1 |
| Q107 | A2 |
| Q108 | A2 |
| Q201 | E4 |
| Q202 | E4 |
| Q203 | E4 |
| Q204 | D4 |
| Q205 | D3 |
| Q206 | D4 |
| Q207 | A |
| Q208 | A4 |
| Q209 | A |
| Q210 | A4 |
| Q211 | A3 |
| Q212 | A3 |
| Q213 | B4 |
| Q214 | E5 |
| Q215 | D4 |
| RV201 | E3 |
| RV202 | C4 |
| RV203 | B4 |

## UR-09-C2 BOARD (1-611-864-12)

Component Side

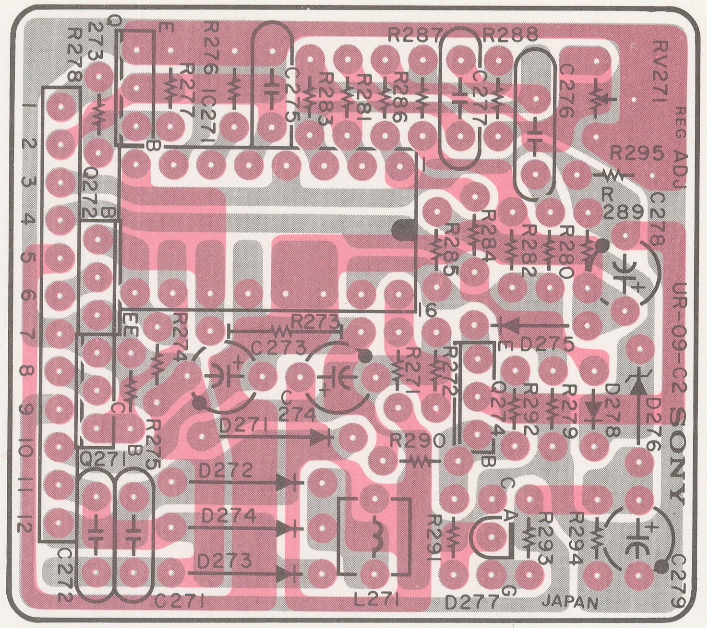
RV271
REG ADJ
UR-09-C2
SONY
JAPAN
IC271
Q271
Q272
Q273
Q274
L271
D271
D272
D273
D274
D275
D276
D277
D278
C271
C272
C273
C274
C275
C276
C277
C278
C279
R273
R274
R275
R276
R277
R278
R279
R281
R282
R283
R284
R285
R286
R287
R288
R289
R290
R291
R292
R293
R294
R295
1
2
3
4
5
6
7
8
9
10
11
12

1-611-864-12 COMPONENT SIDE

1-611-864-12 SOLDER SIDE

## CR-18-C5 BOARD (1-614-232-11)

Component Side

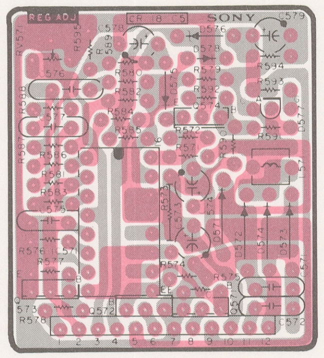
REG ADJ
SONY
RV571
R588
R587
R576
Q573
R578

1-614-232-11 COMPONENT SIDE

1-614-232-11 SOLDER SIDE

## **SP-03** **BOARD** Switching Regulator

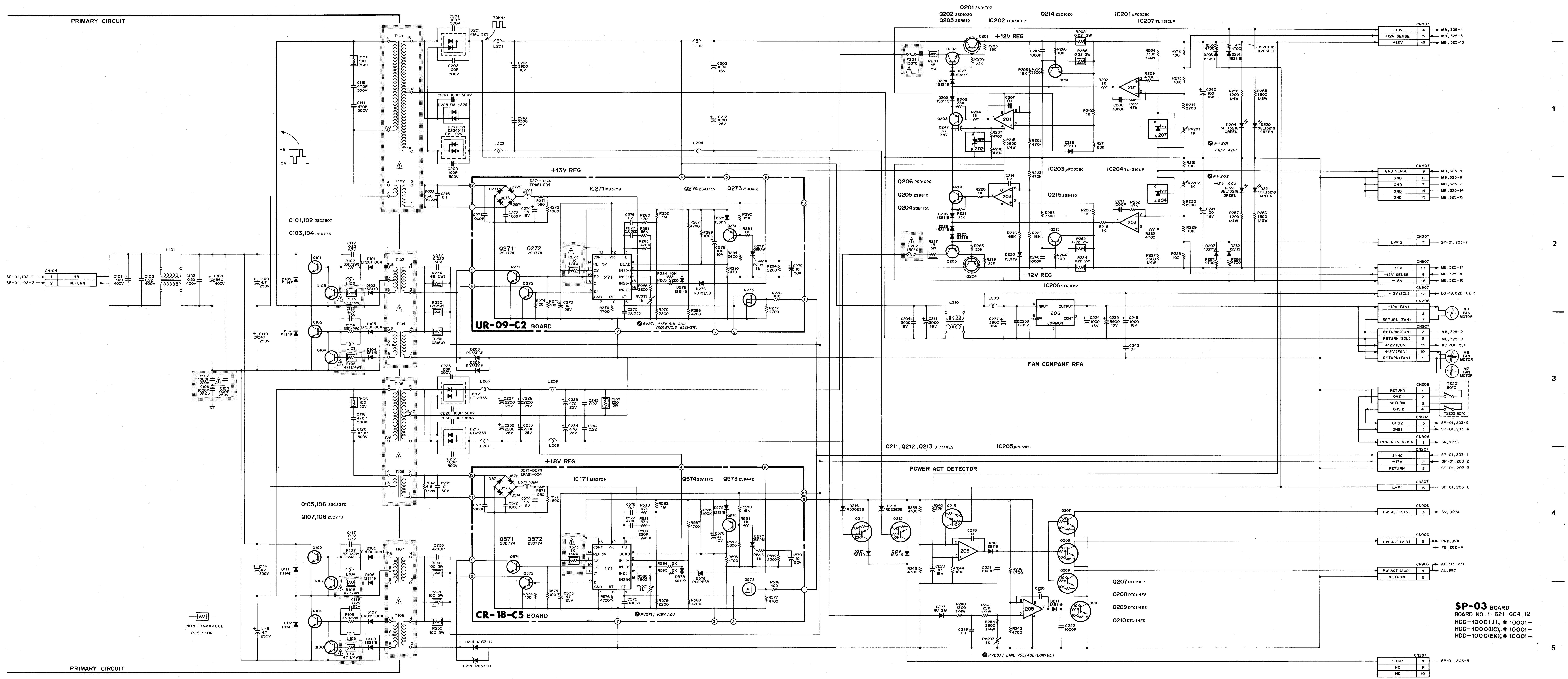
PRIMARY CIRCUIT
CN104
SP-01,102-1
SP-01,102-2
+B
RETURN
L101
T101
T102
T103
T104
T105
T106
T107
T108
70KHz
+B
0V
Q101,102 2SC2307
Q103,104 2SD773
Q105,106 2SC2370
Q107,108 2SD773
+13V REG
IC271 MB3759
Q274 2SA1175
Q273 2SK422
Q271 2SD774
Q272 2SD774
UR-09-C2 BOARD
RV271; +13V SOL ADJ (SOLENOID, BLOWER)
+18V REG
IC171 MB3759
Q574 2SA1175
Q573 2SK442
Q571 2SD774
Q572 2SD774
CR-18-C5 BOARD
RV571; +18V ADJ
NON FRAMMABLE RESISTOR
Q201 2SD1707
Q202 2SD1020
Q203 2SB810
IC202 TL431CLP
Q214 2SD1020
IC201 μPC358C
IC207 TL431CLP
+12V REG
F201 130°C
F202 130°C
RV201 +12V ADJ
Q206 2SD1020
Q205 2SB810
Q204 2SB1155
IC203 μPC358C
IC204 TL431CLP
Q215 2SB810
RV202 -12V ADJ
-12V REG
IC206 STR9012
FAN CONPANE REG
Q211, Q212, Q213 DTA114ES
IC205 μPC358C
POWER ACT DETECTOR
Q207 DTC114ES
Q208 DTC114ES
Q209 DTC114ES
Q210 DTC114ES
RV203; LINE VOLTAGE(LOW)DET
CN907
+18V 4 MB,325-4
+12V SENSE 5 MB,325-5
+12V 13 MB,325-13
GND SENSE 9 MB,325-9
GND 6 MB,325-6
GND 7 MB,325-7
GND 14 MB,325-14
GND 15 MB,325-15
CN207
LVP 2 7 SP-01,203-7
-12V 17 MB,325-17
-12V SENSE 8 MB,325-8
-18V 16 MB,325-16
+13V (SOL) 12 DS-19,022-1,2,3
CN206
+12V (FAN) 1
RETURN (FAN) 3
M9 FAN MOTOR
RETURN (CON) 2 MB,325-2
RETURN (SOL) 3 MB,325-3
+12V (CON) 11 KC,701-5,7
+12V (FAN) 10
RETURN (FAN) 1
M8 FAN MOTOR
M7 FAN MOTOR
CN208
RETURN 1
OHS 1 2
RETURN 3
OHS 2 4
TS201 80°C
TS202 90°C
OHS2 5 SP-01,203-5
OHS1 4 SP-01,203-4
CN906
POWER OVER HEAT 1 SV,B27C
SYNC 1 SP-01,203-1
+17V 2 SP-01,203-2
RETURN 3 SP-01,203-3
LVP1 6 SP-01,203-6
PW ACT (SYS) 2 SV,B27A
PW ACT (VID) 3 PRD,B9A FE,262-4
PW ACT (AUD) 4 AP,317-23C AU,B9C
RETURN 5
STOP 8 SP-01,203-8
NC 9
NC 10
1
2
3
4
5
A
B
C
D
E
F
G
H
I
J
K
L

**SP-03** BOARD
BOARD NO. 1-621-604-12
HDD-1000(J); # 10001-
HDD-1000(UC); # 10001-
HDD-1000(EK); # 10001-

## KRV-060

### Power Supply Unit

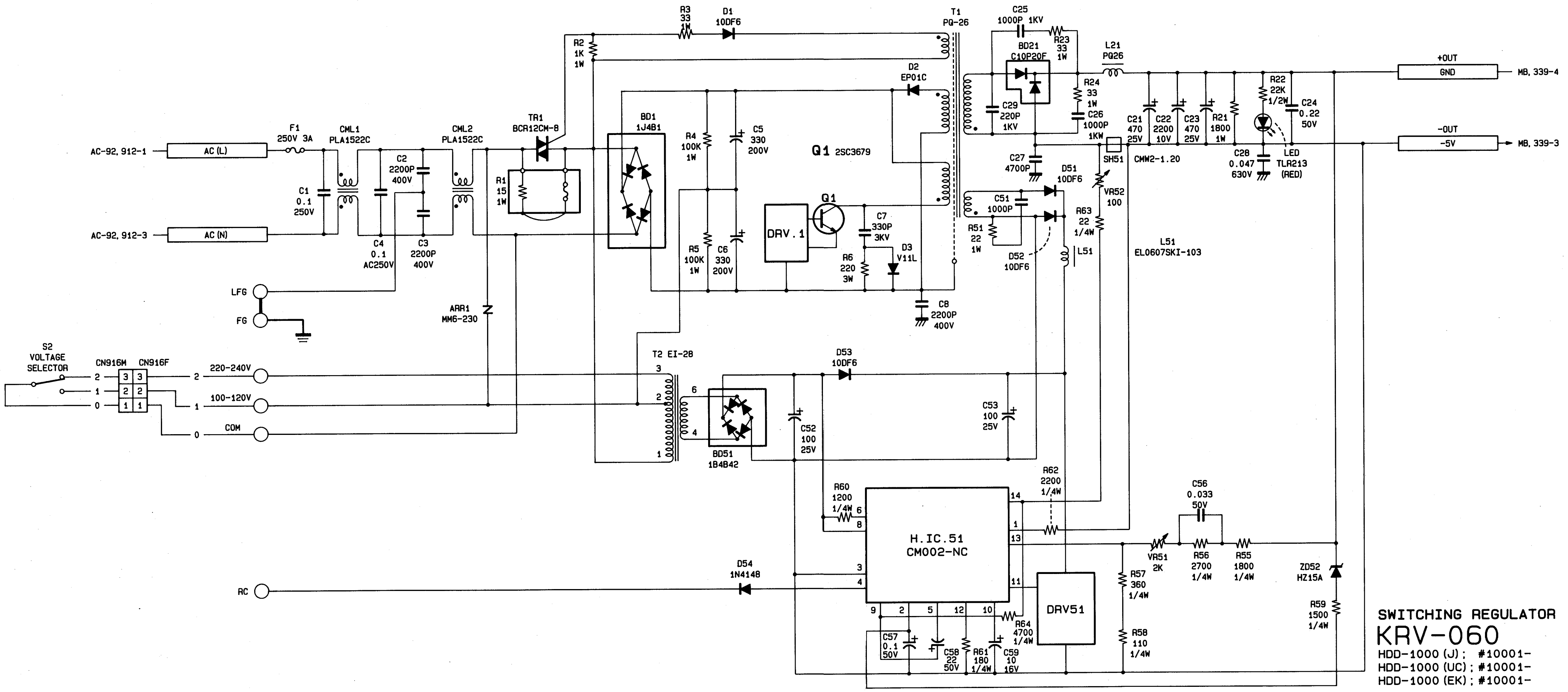
AC-92, 912-1
AC (L)
AC-92, 912-3
AC (N)
F1
250V 3A
C1
0.1
250V
CML1
PLA1522C
C2
2200P
400V
C4
0.1
AC250V
C3
2200P
400V
CML2
PLA1522C
LFG
FG
ARR1
MM6-230
TR1
BCR12CM-8
R1
15
1W
R2
1K
1W
R3
33
1W
D1
10DF6
BD1
1J4B1
R4
100K
1W
C5
330
200V
R5
100K
1W
C6
330
200V
Q1 2SC3679
DRV. 1
Q1
C7
330P
3KV
R6
220
3W
D3
V11L
D2
EP01C
C8
2200P
400V
T1
PQ-26
C25
1000P 1KV
R23
33
1W
BD21
C10P20F
C29
220P
1KV
R24
33
1W
C26
1000P
1KW
C27
4700P
L21
PQ26
C21
470
25V
C22
2200
10V
C23
470
25V
R21
1800
1W
R22
22K
1/2W
C24
0.22
50V
C28
0.047
630V
LED
TLR213
(RED)
SH51
CMW2-1.20
+OUT
GND
MB, 339-4
-OUT
-5V
MB, 339-3
D51
10DF6
C51
1000P
R51
22
1W
D52
10DF6
L51
VR52
100
R63
22
1/4W
L51
EL0607SKI-103
S2
VOLTAGE
SELECTOR
CN916M
CN916F
220-240V
100-120V
COM
T2 EI-28
BD51
1B4B42
D53
10DF6
C52
100
25V
C53
100
25V
R60
1200
1/4W
R62
2200
1/4W
H.IC.51
CM002-NC
DRV51
D54
1N4148
RC
C57
0.1
50V
C58
22
50V
R61
180
1/4W
C59
10
16V
R64
4700
1/4W
C56
0.033
50V
VR51
2K
R56
2700
1/4W
R55
1800
1/4W
R57
360
1/4W
R58
110
1/4W
ZD52
HZ15A
R59
1500
1/4W

SWITCHING REGULATOR
KRV-060
HDD-1000 (J) ; #10001-
HDD-1000 (UC) ; #10001-
HDD-1000 (EK) ; #10001-

**MB-199** **BOARD (1-628-199-11)**

Rear View

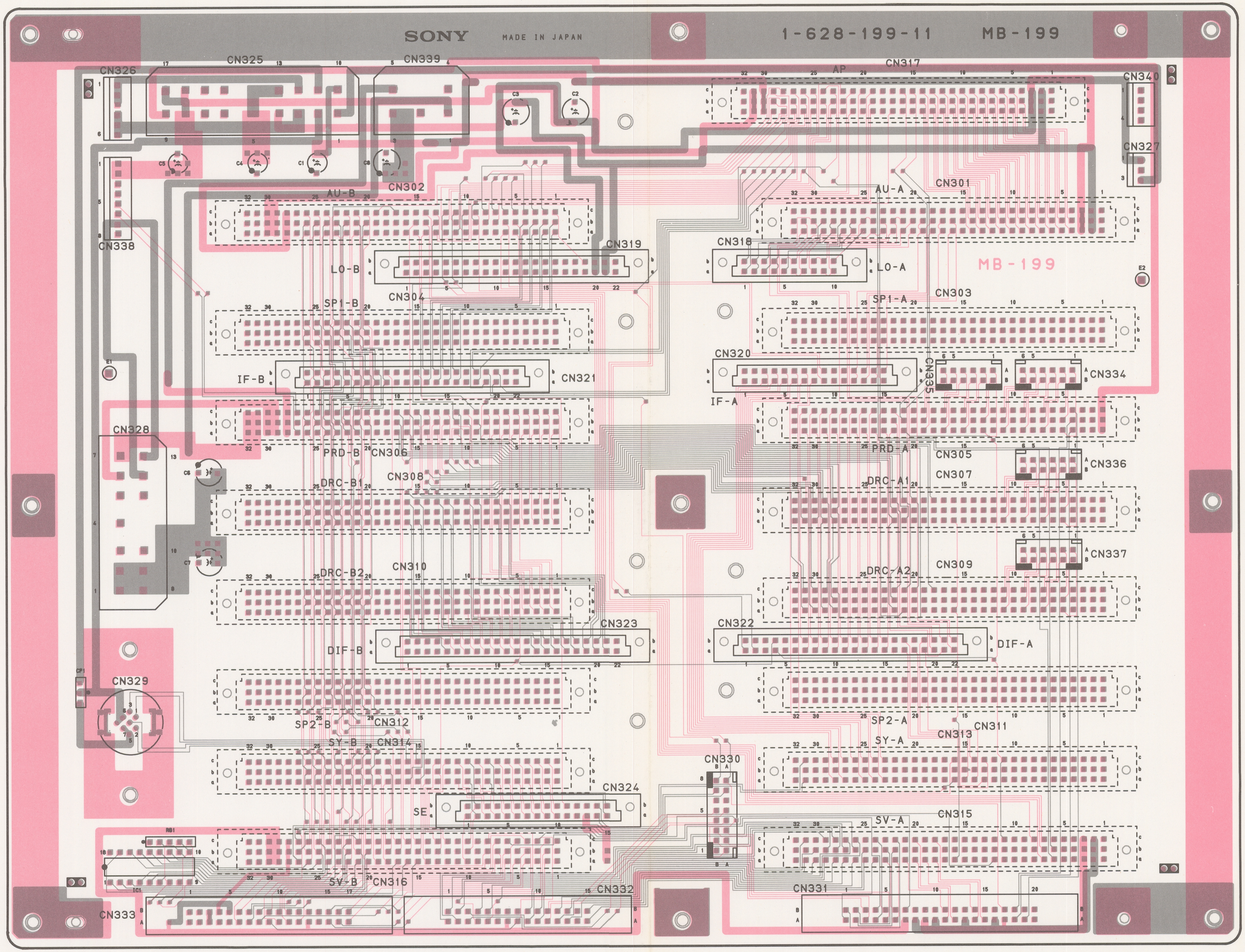
SONY
MADE IN JAPAN
1-628-199-11
MB-199
CN326
CN325
CN339
CN317
AP
CN340
CN327
C5
C4
C1
C8
C3
C2
AU-B
CN302
AU-A
CN301
CN338
CN319
LO-B
CN318
LO-A
MB-199
E2
SP1-B
CN304
SP1-A
CN303
E1
IF-B
CN321
CN320
IF-A
CN335
CN334
CN328
PRD-B
CN306
PRD-A
CN305
CN336
CN307
CN308
DRC-B1
DRC-A1
C6
C7
CN337
DRC-B2
CN310
DRC-A2
CN309
CN323
DIF-B
CN322
DIF-A
CP1
CN329
SP2-B
CN312
SP2-A
CN313
CN311
SY-B
CN314
SY-A
CN330
CN324
SE
SV-A
CN315
RB1
SV-B
CN316
CN333
CN332
CN331

1-628-199-11 REAR SIDE

1-628-199-11 FRONT SIDE

## MB-199 BOARD SIGNAL TABLE(1/2)

CN340

| Pin | Signal |
|---|---|
| 1 | GND |
| 2 | -12V |
| 3 | +12V |
| 4 | GND |

CN327

| Pin | Signal |
|---|---|
| 1 | +12V (FAN) |
| 2 | |
| 3 | RETURN (FAN) |

⑨

### AP-22

CN317

| | C | B | A |
|---|---|---|---|
| 1 | | GND | |
| 2 | | +18V | |
| 3 | | -18V | |
| 4 | | TR1 PB (X) | TR1 PB (G) |
| 5 | TR2 PB (X) | TR1 CONFI (G) | TR1 CONFI (X) |
| 6 | TR2 PB (G) | TR2 CONFI (X) | TR2 CONFI (G) |
| 7 | TR3 CONFI (X) | TR3 PB (G) | TR3 PB (X) |
| 8 | TR3 CONFI (G) | TR4 PB (X) | TR4 PB (G) |
| 9 | TR5 PB (X) | TR4 CONFI (G) | TR4 CONFI (X) |
| 10 | TR5 PB (G) | TR5 CONFI (X) | TR5 CONFI (G) |
| 11 | TR6 CONFI (X) | TR6 PB (G) | TR6 PB (X) |
| 12 | TR6 CONFI (G) | TR7 PB (X) | TR7 PB (G) |
| 13 | TR8 PB (X) | TR7 CONFI (G) | TR7 CONFI (X) |
| 14 | TR8 PB (G) | TR8 CONFI (X) | TR8 CONFI (G) |
| 15 | WFM CTL (X) | | |
| 16 | WFM CTL (G) | | |
| 17 | | | PB TC |
| 18 | | | |
| 19 | REC INHI (AUD) | CUE PB INV | CUE PB NORM |
| 20 | NOR FWD | | |
| 21 | REC HD CTL PB | | TC REC |
| 22 | ERASE F | | |
| 23 | PW ACT (AUD) | CUE REC INV | CUE REC NORM |
| 24 | CTL REC | CABLE CONTACT | |
| 25 | CTL PB | | CTL ERASE |
| 26 | LCK | REC EN | REC EN LCK |
| 27 | DATA 1 | DATA 2 | BCK |
| 28 | ~CUE ERASE | ~TC ERASE | ~FULL ERASE |
| 29 | ~CUE REC | ~TC REC | ~CTL REC |
| 30 | | -5V | |
| 31 | | +5V | |
| 32 | | GND | |

CN339

| Pin | | | Pin |
|---|---|---|---|
| 4 | GND | GND SENSE | 1 |
| | | | 2 |
| 5 | -5V SENSE | -5V | 3 |

CN325

| Pin | | | Pin |
|---|---|---|---|
| 10 | +12V (FAN) | RETURN (FAN) | 1 |
| 11 | +12V (CON) | RETURN (CON) | 2 |
| 12 | +13V (SOL) | RETURN (SOL) | 3 |
| 13 | +12V | +18V | 4 |
| | | +12V SENSE | 5 |
| 14 | GND (+-12V) | GND (+-18V) | 6 |
| 15 | GND (+-12V) | GND (+-12V) | 7 |
| 16 | -18V | -12V SENSE | 8 |
| 17 | -12V | GND SENSE | 9 |

CN326

| Pin | Signal |
|---|---|
| 1 | +13V (SOL) |
| 2 | +13V (SOL) |
| 3 | +13V (SOL) |
| 4 | RETURN (SOL) |
| 5 | RETURN (SOL) |
| 6 | RETURN (SOL) |

⑧

### AU-109

CN301 (CNA)

| | C | B | A |
|---|---|---|---|
| 1 | | GND | |
| 2 | | +18V | |
| 3 | | -18V | |
| 4 | | TR1 PB (X) | TR1 PB (G) |
| 5 | TR2 PB (X) | TR1 CONFI (G) | TR1 CONFI (X) |
| 6 | TR2 PB (G) | TR2 CONFI (X) | TR2 CONFI (G) |
| 7 | TR3 CONFI (X) | TR3 PB (G) | TR3 PB (X) |
| 8 | TR3 CONFI (G) | TR4 PB (X) | TR4 PB (G) |
| 9 | TR5 PB (X) | TR4 CONFI (G) | TR4 CONFI (X) |
| 10 | TR5 PB (G) | TR5 CONFI (X) | TR5 CONFI (G) |
| 11 | TR6 CONFI (X) | TR6 PB (G) | TR6 PB (X) |
| 12 | TR6 CONFI (G) | TR7 PB (X) | TR7 PB (G) |
| 13 | TR8 PB (X) | TR7 CONFI (G) | TR7 CONFI (X) |
| 14 | TR8 PB (G) | TR8 CONFI (X) | TR8 CONFI (G) |
| 15 | | | |
| 16 | | MONI R1 (Y) | MONI R1 (X) |
| 17 | | MONI R1 (G) | MONI R1 (G) |
| 18 | | MONI L1 (Y) | MONI L1 (X) |
| 19 | | MONI L1 (G) | MONI L1 (G) |
| 20 | | MONI L3 (G) | MONI L3 (X) |
| 21 | | MONI R3 (G) | MONI L3 (G) |
| 22 | | MONI R3 (G) | MONI R3 (X) |
| 23 | | TC LINE OUT (X) | TC LINE OUT (G) |
| 24 | | CUE LINE OUT (X) | TC LINE OUT (G) |
| 25 | | CUE LINE OUT (G) | CUE LINE OUT (X) |
| 26 | | TC LINE IN (G) | TC LINE IN (G) |
| 27 | | TC LINE IN (Y) | TC LINE IN (X) |
| 28 | | CUE LINE IN (G) | CUE LINE IN (G) |
| 29 | | CUE LINE IN (Y) | CUE LINE IN (X) |
| 30 | | MIX IN (G) | MIX IN (G) |
| 31 | | MIX IN (Y) | MIX IN (X) |
| 32 | | GND | |

CN302 (CNB)

| | C | B | A |
|---|---|---|---|
| 1 | PA (O) | TR8 DATA | TR7 DATA |
| 2 | ~CUE ERASE | TR6 DATA | TR5 DATA |
| 3 | ~TC ERASE | TR4 DATA | TR3 DATA |
| 4 | ~FULL ERASE | TR2 DATA | TR1 DATA |
| 5 | ~CTL ERASE | MONISEL OUT | MONISEL IN |
| 6 | ~CUE ERASE | TXD | RXD |
| 7 | ~TC REC | TC PB | |
| 8 | ~CTL REC | CUE PB NORM | |
| 9 | PW ACT (AUD) | CUE PB INV | |
| 10 | REC INHI (VID) | TC REC | REC HD CTL PB |
| 11 | TC READ | CUE REC NORM | PB CTL |
| 12 | TC GEN | CUE REC INV | CABLE CONTACT |
| 13 | NOR FWD | REF V | REC INHI (AUD) |
| 14 | TRACKING (G) | TRACKING (Y) | TRACKING (X) |
| 15 | | ~AU CS | TRACKING OFF |
| 16 | | | |
| 17 | ~OP CS | | |
| 18 | | | WAIT |
| 19 | ERASE F | | |
| 20 | SV A8 | SV A7 | SV A6 |
| 21 | SV A5 | SV A4 | SV A3 |
| 22 | SV A2 | SV A1 | SV A0 |
| 23 | ~CPU RESET | SV D7 | SV D6 |
| 24 | SV D5 | SV D4 | SV D3 |
| 25 | SV D2 | SV D1 | SV D0 |
| 26 | ~SV RD | ~RESET | ~SV WR |
| 27 | | | |
| 28 | | -5V | |
| 29 | | +5V | |
| 30 | | +5V | |
| 31 | | GND | |
| 32 | | GND | |

CN338

| Pin | Signal |
|---|---|
| 1 | -12V |
| 2 | -12V |
| 3 | GND |
| 4 | GND |
| 5 | REC CTRL 2 |
| 6 | REC CTRL 1 |
| 7 | -5V |
| 8 | GND |

### LO-06

CN318 (CNA)

| | B | A |
|---|---|---|
| 1 | CUE LINE IN (Y) | CUE LINE IN (X) |
| 2 | CUE LINE IN (G) | CUE LINE IN (G) |
| 3 | TC LINE IN (Y) | TC LINE IN (X) |
| 4 | TC LINE IN (G) | TC LINE IN (G) |
| 5 | CUE LINE OUT (G) | CUE LINE OUT (X) |
| 6 | CUE LINE OUT (G) | TC LINE OUT (G) |
| 7 | TC LINE OUT (X) | TC LINE OUT (G) |
| 8 | MONITOR R (G) | MONITOR R (X) |
| 9 | MONITOR R (G) | MONITOR L (G) |
| 10 | MONITOR L (X) | MONITOR L (G) |

CN319 (CNB)

| | B | A |
|---|---|---|
| 1 | | |
| 2 | | |
| 3 | | |
| 4 | | |
| 5 | | |
| 6 | | |
| 7 | | |
| 8 | | |
| 9 | | |
| 10 | | |
| 11 | | |
| 12 | | |
| 13 | | |
| 14 | | |
| 15 | | |
| 16 | | |
| 17 | | |
| 18 | | |
| 19 | PA (O) | |
| 20 | -18V | -18V |
| 21 | +18V | +18V |
| 22 | GND | GND |

⑦

### SPARE-1

CN303 (CNA)

| | C | B | A |
|---|---|---|---|
| 1 | | GND | |
| 2 | | +12V | |
| 3 | | -12V | |
| 4 | | | |
| 5 | | | |
| 6 | | | |
| 7 | | | |
| 8 | | | |
| 9 | | | |
| 10 | | | |
| 11 | | | |
| 12 | | | |
| 13 | | | |
| 14 | | | |
| 15 | | | |
| 16 | | | |
| 17 | | | |
| 18 | | | |
| 19 | | | |
| 20 | | | |
| 21 | | | |
| 22 | | | |
| 23 | | | |
| 24 | | | |
| 25 | | | |
| 26 | | | |
| 27 | | | |
| 28 | | | |
| 29 | | | |
| 30 | | | |
| 31 | | | |
| 32 | | GND | |

CN304 (CNB)

| | C | B | A |
|---|---|---|---|
| 1 | | | |
| 2 | | | |
| 3 | | | |
| 4 | | | |
| 5 | | | |
| 6 | | | |
| 7 | | | |
| 8 | | | |
| 9 | | | |
| 10 | | | |
| 11 | | | |
| 12 | | | |
| 13 | | | |
| 14 | | | |
| 15 | | | |
| 16 | | | |
| 17 | | | |
| 18 | | | |
| 19 | | | |
| 20 | SV A8 | SV A7 | SV A6 |
| 21 | SV A5 | SV A4 | SV A3 |
| 22 | SV A2 | SV A1 | SV A0 |
| 23 | ~OP CS | SV D7 | SV D6 |
| 24 | SV D5 | SV D4 | SV D3 |
| 25 | SV D2 | SV D1 | SV D0 |
| 26 | ~SV RD | ~RESET | ~SV WR |
| 27 | | | |
| 28 | | -5V | |
| 29 | | +5V | |
| 30 | | +5V | |
| 31 | | GND | |
| 32 | | GND | |

CN334

| | A | B |
|---|---|---|
| 1 | REC-1 (X) | REC-1 (G) |
| 2 | REC-1 (Y) | REC-2 (X) |
| 3 | REC-2 (G) | REC-2 (Y) |
| 4 | REC-3 (X) | REC-3 (G) |
| 5 | REC-3 (Y) | REC-4 (X) |
| 6 | REC-4 (G) | REC-4 (Y) |

CN335

| | A | B |
|---|---|---|
| 1 | REC-5 (X) | REC-5 (G) |
| 2 | REC-5 (Y) | REC-6 (X) |
| 3 | REC-6 (G) | REC-6 (Y) |
| 4 | REC-7 (X) | REC-7 (G) |
| 5 | REC-7 (Y) | REC-8 (X) |
| 6 | REC-8 (G) | REC-8 (Y) |

### IF-207

CN320 (CNA)

| | B | A |
|---|---|---|
| 15 | MONI R1 (Y) | MONI R1 (X) |
| 14 | MONI R1 (G) | |
| 13 | MONI L1 (Y) | MONI L1 (X) |
| 12 | MONI L1 (G) | |
| 11 | | |
| 10 | | |
| 9 | MONISEL OUT | MONISEL IN |
| 8 | | DTM |
| 7 | DVT | DGN |
| 6 | DRD | MP |
| 5 | K4 | TC CK |
| 4 | TC DATA 2 | TC DATA 1 |
| 3 | TC DATA 8 | TC DATA 4 |
| 2 | +5V | |
| 1 | GND | |

CN321 (CNB)

| | B | A |
|---|---|---|
| 1 | | ~RESET |
| 2 | ~SV RD | ~SV WR |
| 3 | SV D1 | SV D0 |
| 4 | SV D3 | SV D2 |
| 5 | SV D5 | SV D4 |
| 6 | SV D7 | SV D6 |
| 7 | SV A1 | SV A0 |
| 8 | SV A3 | SV A2 |
| 9 | ~REM CS | SV A4 |
| 10 | | |
| 11 | | |
| 12 | REMOTE OUT | |
| 13 | TR2 DATA | TR1 DATA |
| 14 | TR4 DATA | TR3 DATA |
| 15 | TR6 DATA | TR5 DATA |
| 16 | TR8 DATA | TR7 DATA |
| 17 | | |
| 18 | DATA 2 | DATA 1 |
| 19 | LCK | BCK |
| 20 | REC EN LCK | REC EN |
| 21 | | |
| 22 | | |

⑥

### PRD-1

CN305 (CNA)

| | C | B | A |
|---|---|---|---|
| 1 | | GND | |
| 2 | | +12V | |
| 3 | | -12V | |
| 4 | REC RELAY | ERASE CTRL 2 | ERASE CTRL 1 |
| 5 | REC-1 (Y) | REC-1 (G) | REC-1 (X) |
| 6 | GND | GND | GND |
| 7 | REC-2 (Y) | REC-2 (G) | REC-2 (X) |
| 8 | GND | GND | GND |
| 9 | REC-3 (Y) | REC-3 (G) | REC-3 (X) |
| 10 | GND | GND | GND |
| 11 | REC-4 (Y) | REC-4 (G) | REC-4 (X) |
| 12 | GND | GND | GND |
| 13 | REC-5 (Y) | REC-5 (G) | REC-5 (X) |
| 14 | GND | GND | GND |
| 15 | REC-6 (Y) | REC-6 (G) | REC-6 (X) |
| 16 | GND | GND | GND |
| 17 | REC-7 (Y) | REC-7 (G) | REC-7 (X) |
| 18 | GND | GND | GND |
| 19 | REC-8 (Y) | REC-8 (G) | REC-8 (X) |
| 20 | | GND | |
| 21 | WFM CTL (X) | WFM CTL (G) | REF SYNC |
| 22 | WFM OUT (Y) | WFM OUT (X) | WFM OUT (G) |
| 23 | RD-1 (-) | GND | RD-1 (+) |
| 24 | RD-2 (-) | GND | RD-2 (+) |
| 25 | RD-3 (-) | GND | RD-3 (+) |
| 26 | RD-4 (-) | GND | RD-4 (+) |
| 27 | RD-5 (-) | GND | RD-5 (+) |
| 28 | RD-6 (-) | GND | RD-6 (+) |
| 29 | RD-7 (-) | GND | RD-7 (+) |
| 30 | RD-8 (-) | GND | RD-8 (+) |
| 31 | RCK (-) | GND | RCK (+) |
| 32 | | GND | |

CN306 (CNB)

| | C | B | A |
|---|---|---|---|
| 1 | EE DATA-1 (-) | GND | EE DATA-1 (+) |
| 2 | EE DATA-2 (-) | GND | EE DATA-2 (+) |
| 3 | EE DATA-3 (-) | GND | EE DATA-3 (+) |
| 4 | EE DATA-4 (-) | GND | EE DATA-4 (+) |
| 5 | EE DATA-5 (-) | GND | EE DATA-5 (+) |
| 6 | EE DATA-6 (-) | GND | EE DATA-6 (+) |
| 7 | EE DATA-7 (-) | GND | EE DATA-7 (+) |
| 8 | EE DATA-8 (-) | GND | EE DATA-8 (+) |
| 9 | REC INHI (VID) | RF ENV 1 | PW ACT (VID) |
| 10 | ENV A1 | RF ENV 2 | ENV A0 |
| 11 | ~ENV A2 | REF V | ENV A2 |
| 12 | NOR/BID | EE/TAPE1 | EE/TAPE2 |
| 13 | PLL RESET 3 | PLL RESET 2 | PLL RESET 1 |
| 14 | PLL RESET 6 | PLL RESET 5 | PLL RESET 4 |
| 15 | SENSE CTRL | PLL RESET 8 | PLL RESET 7 |
| 16 | DRUM LOCK | NO RF 2 | NO RF 1 |
| 17 | DRC SPARE 3 | DRC SPARE 2 | DRC SPARE 1 |
| 18 | | | |
| 19 | | | |
| 20 | SV A8 | SV A7 | SV A6 |
| 21 | SV A5 | SV A4 | SV A3 |
| 22 | SV A2 | SV A1 | SV A0 |
| 23 | ~VO CS | SV D7 | SV D6 |
| 24 | SV D5 | SV D4 | SV D3 |
| 25 | SV D2 | SV D1 | SV D0 |
| 26 | ~SV RD | ~RESET | ~SV WR |
| 27 | REC CTRL 2 | | REC CTRL 1 |
| 28 | | -5V | |
| 29 | | +5V | |
| 30 | | +5V | |
| 31 | | GND | |
| 32 | | GND | |

CN336

| | A | B |
|---|---|---|
| 1 | PB-1 (X) | PB-1 (G) |
| 2 | PB-1 (Y) | PB-2 (X) |
| 3 | PB-2 (G) | PB-2 (Y) |
| 4 | PB-3 (X) | PB-3 (G) |
| 5 | PB-3 (Y) | PB-4 (X) |
| 6 | PB-4 (G) | PB-4 (Y) |

⑤

### DRC-1 (#1)

CN307 (CNA)

| | C | B | A |
|---|---|---|---|
| 1 | | GND | |
| 2 | | +12V | |
| 3 | | -12V | |
| 4 | | | |
| 5 | PB-1 (Y) | PB-1 (G) | PB-1 (X) |
| 6 | | GND | |
| 7 | PB-2 (Y) | PB-2 (G) | PB-2 (X) |
| 8 | | GND | |
| 9 | PB-3 (Y) | PB-3 (G) | PB-3 (X) |
| 10 | | GND | |
| 11 | PB-4 (Y) | PB-4 (G) | PB-4 (X) |
| 12 | | GND | |
| 13 | | | |
| 14 | | | |
| 15 | | | |
| 16 | | | TAPE SPEED |
| 17 | | | |
| 18 | RF ENV 1 | | |
| 19 | | | |
| 20 | SENSE CTRL | | |
| 21 | DRUM LOCK | | NO RF 1 |
| 22 | DRC SPARE 3 | DRC SPARE 2 | DRC SPARE 1 |
| 23 | | | |
| 24 | | | |
| 25 | | | |
| 26 | | | |
| 27 | | | |
| 28 | ENV A2 | ENV A1 | ENV A0 |
| 29 | NOR/BID | | EE/TAPE 1 |
| 30 | PLL RESET 2 | | PLL RESET 1 |
| 31 | PLL RESET 4 | | PLL RESET 3 |
| 32 | | GND | |

CN308 (CNB)

| | C | B | A |
|---|---|---|---|
| 1 | EE DATA-1 (-) | | EE DATA-1 (+) |
| 2 | EE DATA-2 (-) | | EE DATA-2 (+) |
| 3 | EE DATA-3 (-) | | EE DATA-3 (+) |
| 4 | EE DATA-4 (-) | | EE DATA-4 (+) |
| 5 | | GND | |
| 6 | PD-1 (-) | GND | PD-1 (+) |
| 7 | PCK-1 (-) | GND | PCK-1 (+) |
| 8 | | GND | |
| 9 | PD-2 (-) | GND | PD-2 (+) |
| 10 | PCK-2 (-) | GND | PCK-2 (+) |
| 11 | | GND | |
| 12 | PD-3 (-) | GND | PD-3 (+) |
| 13 | PCK-3 (-) | GND | PCK-3 (+) |
| 14 | | GND | |
| 15 | PD-4 (-) | GND | PD-4 (+) |
| 16 | PCK-4 (-) | GND | PCK-4 (+) |
| 17 | | GND | |
| 18 | | | |
| 19 | | | |
| 20 | SV A8 | SV A7 | SV A6 |
| 21 | SV A5 | SV A4 | SV A3 |
| 22 | SV A2 | SV A1 | SV A0 |
| 23 | ~TBC CS | SV D7 | SV D6 |
| 24 | SV D5 | SV D4 | SV D3 |
| 25 | SV D2 | SV D1 | SV D0 |
| 26 | ~SV RD | ~RESET | ~SV WR |
| 27 | | | |
| 28 | | -5V | |
| 29 | | +5V | |
| 30 | | +5V | |
| 31 | | GND | |
| 32 | | GND | |

CN328

| Pin | Signal | Pin | Signal |
|---|---|---|---|
| 13 | -5V SENSE | 7 | GND SENSE |
| 12 | -5V | 6 | +5V SENSE |
| 11 | GND (-5V) | 5 | GND (+5V) |
| | | 4 | GND (+5V) |
| 10 | GND (+5V) | 3 | GND (+5V) |
| 9 | +5V | 2 | +5V |
| 8 | +5V | 1 | +5V |

## MB-199 BOARD SIGNAL TABLE (1/2)

HDD-1000 (J) ; #10001-
HDD-1000 (UC) ; #10001-
HDD-1000 (EK) ; #10001-

1

## MB-199 BOARD SIGNAL TABLE(2/2)

CN337

| | A | B |
|---|---|---|
| 1 | PB-5 (X) | PB-5 (G) |
| 2 | PB-5 (Y) | PB-6 (X) |
| 3 | PB-6 (G) | PB-6 (Y) |
| 4 | PB-7 (X) | PB-7 (G) |
| 5 | PB-7 (Y) | PB-8 (X) |
| 6 | PB-8 (G) | PB-8 (Y) |

④

### DRC-1 (#2)

CN309 (CNA)

| | C | B | A |
|---|---|---|---|
| 1 | GND | | |
| 2 | +12V | | |
| 3 | -12V | | |
| 4 | | | |
| 5 | PB-5 (Y) | PB-5 (G) | PB-5 (X) |
| 6 | GND | | |
| 7 | PB-6 (Y) | PB-6 (G) | PR-6 (X) |
| 8 | GND | | |
| 9 | PB-7 (Y) | PB-7 (G) | PB-7 (X) |
| 10 | GND | | |
| 11 | PB-8 (Y) | PB-8 (G) | PB-8 (X) |
| 12 | GND | | |
| 13 | | | |
| 14 | | | |
| 15 | | | |
| 16 | | | TAPE SPEED |
| 17 | | | |
| 18 | RF ENV 2 | | |
| 19 | | | |
| 20 | SENSE CTRL | | |
| 21 | DRUM LOCK | | NO RF2 |
| 22 | DRC SPARE3 | DRC SPARE2 | DRC SPARE1 |
| 23 | | | |
| 24 | | | |
| 25 | | | |
| 26 | | | |
| 27 | | | |
| 28 | ~ENV A2 | ENV A1 | ENV A0 |
| 29 | NOR/BID | | EE/TAPE 2 |
| 30 | PLL RESET6 | | PLL RESET5 |
| 31 | PLL RESET8 | | PLL RESET7 |
| 32 | GND | | |

CN310 (CNB)

| | C | B | A |
|---|---|---|---|
| 1 | EE DATA-5 (-) | GND | EE DATA-5 (+) |
| 2 | EE DATA-6 (-) | | EE DATA-6 (+) |
| 3 | EE DATA-7 (-) | | EE DATA-7 (+) |
| 4 | EE DATA-8 (-) | | EE DATA-8 (+) |
| 5 | GND | | |
| 6 | PD-5 (-) | GND | PD-5 (+) |
| 7 | PCK-5 (-) | GND | PCK-5 (+) |
| 8 | GND | | |
| 9 | PD-6 (-) | GND | PD-6 (+) |
| 10 | PCK-6 (-) | GND | PCK-6 (+) |
| 11 | GND | | |
| 12 | PD-7 (-) | GND | PD-7 (+) |
| 13 | PCK-7 (-) | GND | PCK-7 (+) |
| 14 | GND | | |
| 15 | PD-8 (-) | GND | PD-8 (+) |
| 16 | PCK-8 (-) | GND | PCK-8 (+) |
| 17 | GND | | |
| 18 | | | |
| 19 | | | |
| 20 | SV A8 | SV A7 | SV A6 |
| 21 | SV A5 | SV A4 | SV A3 |
| 22 | SV A2 | SV A1 | SV A0 |
| 23 | ~TBC CS | SV D7 | SV D6 |
| 24 | SV D5 | SV D4 | SV D3 |
| 25 | SV D2 | SV D1 | SV D0 |
| 26 | ~SV RD | ~RESET | ~SV WR |
| 27 | | | |
| 28 | -5V | | |
| 29 | +5V | | |
| 30 | +5V | | |
| 31 | GND | | |
| 32 | GND | | |

### DIF-2

CN322 (CNA)

| | B | A |
|---|---|---|
| 22 | MIX IN (Y) | MIX IN (X) |
| 21 | MIX IN (G) | WFM OUT (G) |
| 20 | WFM OUT (Y) | WFM OUT (X) |
| 19 | VITC GATE | VITC READ |
| 18 | | VITC GEN |
| 17 | CHARA SIG | CHARA GATE |
| 16 | GND | |
| 15 | RD-1 (-) | RD-1 (+) |
| 14 | RD-2 (-) | RD-2 (+) |
| 13 | RD-3 (-) | RD-3 (+) |
| 12 | RD-4 (-) | RD-4 (+) |
| 11 | RD-5 (-) | RD-5 (+) |
| 10 | RD-6 (-) | RD-6 (+) |
| 9 | RD-7 (-) | RD-7 (+) |
| 8 | RD-8 (-) | RD-8 (+) |
| 7 | RCK (-) | RCK (+) |
| 6 | GND | |
| 5 | | |
| 4 | REF V | REF SYNC |
| 3 | | |
| 2 | | TXD |
| 1 | | RXD |

CN323 (CNB)

| | B | A |
|---|---|---|
| 22 | GND | |
| 21 | PD-1 (-) | PD-1 (+) |
| 20 | PCK-1 (-) | PCK-1 (+) |
| 19 | PD-2 (-) | PD-2 (+) |
| 18 | PCK-2 (-) | PCK-2 (+) |
| 17 | PD-3 (-) | PD-3 (+) |
| 16 | PCK-3 (-) | PCK-3 (+) |
| 15 | PD-4 (-) | PD-4 (+) |
| 14 | PCK-4 (-) | PCK-4 (+) |
| 13 | GND | |
| 12 | PD-5 (-) | PD-5 (+) |
| 11 | PCK-5 (-) | PCK-5 (+) |
| 10 | PD-6 (-) | PD-6 (+) |
| 9 | PCK-6 (-) | PCK-6 (+) |
| 8 | PD-7 (-) | PD-7 (+) |
| 7 | PCK-7 (-) | PCK-7 (+) |
| 6 | PD-8 (-) | PD-8 (+) |
| 5 | PCK-8 (-) | PCK-8 (+) |
| 4 | GND | |
| 3 | -5V | |
| 2 | +5V | |
| 1 | GND | |

③

### SPARE-2

CN311 (CNA)

| | C | B | A |
|---|---|---|---|
| 1 | GND | | |
| 2 | +12V | | |
| 3 | -12V | | |
| 4 | | | |
| 5 | | | |
| 6 | | | |
| 7 | | | |
| 8 | | | |
| 9 | | | |
| 10 | | | |
| 11 | | | |
| 12 | | | |
| 13 | | | |
| 14 | | | |
| 15 | | | |
| 16 | | | |
| 17 | | | |
| 18 | | | |
| 19 | | | |
| 20 | | | |
| 21 | | | |
| 22 | | | |
| 23 | | | |
| 24 | | | |
| 25 | | | |
| 26 | | | |
| 27 | | | |
| 28 | | | |
| 29 | | | |
| 30 | | | |
| 31 | | | |
| 32 | GND | | |

CN312 (CNB)

| | C | B | A |
|---|---|---|---|
| 1 | | | |
| 2 | | | |
| 3 | | | |
| 4 | | | |
| 5 | | | |
| 6 | | | |
| 7 | | | |
| 8 | | | |
| 9 | | | |
| 10 | | | |
| 11 | | | |
| 12 | | | |
| 13 | | | |
| 14 | | | |
| 15 | | | |
| 16 | | | |
| 17 | | | |
| 18 | | | |
| 19 | | | |
| 20 | SV A8 | SV A7 | SV A6 |
| 21 | SV A5 | SV A4 | SV A3 |
| 22 | SV A2 | SV A1 | SV A0 |
| 23 | ~RD CS | SV D7 | SV D6 |
| 24 | SV D5 | SV D4 | SV D3 |
| 25 | SV D2 | SV D1 | SV D0 |
| 26 | ~SV RD | ~RESET | ~SV WR |
| 27 | | | |
| 28 | -5V | | |
| 29 | +5V | | |
| 30 | +5V | | |
| 31 | GND | | |
| 32 | GND | | |

②

### SY-103

CN313 (CNA)

| | C | B | A |
|---|---|---|---|
| 1 | GND | | |
| 2 | +12V | | |
| 3 | -12V | | |
| 4 | | | |
| 5 | | | |
| 6 | | | |
| 7 | | | |
| 8 | | | |
| 9 | | | |
| 10 | | | |
| 11 | REF SYNC | | |
| 12 | | | |
| 13 | CHARA GATE | | CHARA SIG |
| 14 | VITC GATE | | VITC READ |
| 15 | | | VITC GEN |
| 16 | TC GEN | | TC READ |
| 17 | | | |
| 18 | | | |
| 19 | | | |
| 20 | | | |
| 21 | | | |
| 22 | | | |
| 23 | DTM | | DVT |
| 24 | DGN | | DRD |
| 25 | MP | | K4 |
| 26 | TC CK | | |
| 27 | TC DATA2 | | TC DATA1 |
| 28 | TC DATA8 | | TC DATA4 |
| 29 | | | |
| 30 | | | |
| 31 | RS 232C SELECT | | RS 232C SENSE |
| 32 | GND | | |

CN314 (CNB)

| | C | B | A |
|---|---|---|---|
| 1 | | | |
| 2 | REM 2A IN (-) | | REM 2A IN (+) |
| 3 | REM 2B IN (-) | | REM 2B IN (+) |
| 4 | PRIORITY 2B IN | | PRIORITY 2A IN |
| 5 | REM 2A OUT (-) | | REM 2A OUT (+) |
| 6 | REM 2B OUT (-) | | REM 2B OUT (+) |
| 7 | PRIORITY 2B OUT | | PRIORITY 2A OUT |
| 8 | CTS | | RTS |
| 9 | RS 232C RX | | RS 232C TX |
| 10 | TAPE DIR | | TIMER PULSE |
| 11 | CCJ RX | | CCJ TX |
| 12 | | | |
| 13 | | REF V | |
| 14 | | | REF2 |
| 15 | CP RX (-) | | CP RX (+) |
| 16 | CP TX (-) | | CP TX (+) |
| 17 | | | |
| 18 | ~CM CS | ~TC CS | ~SV WAIT |
| 19 | | SV A10 | SV A9 |
| 20 | SV A8 | SV A7 | SV A6 |
| 21 | SV A5 | SV A4 | SV A3 |
| 22 | SV A2 | SV A1 | SV A0 |
| 23 | ~CPU RESET | SV D7 | SV D6 |
| 24 | SV D5 | SV D4 | SV D3 |
| 25 | SV D2 | SV D1 | SV D0 |
| 26 | ~SV RD | ~RESET | ~SV WR |
| 27 | | | |
| 28 | -5V | | |
| 29 | +5V | | |
| 30 | +5V | | |
| 31 | GND | | |
| 32 | GND | | |

CN329

| | | | |
|---|---|---|---|
| 1 | CP TX (+) | CP TX (-) | 2 |
| 3 | CP RX (+) | CP RX (-) | |
| | +12V (CON) | 5 | |
| 6 | RETURN (CON) | +12V (CON) | 7 |
| 8 | RETURN (CON) | | |

CN330

| | B | A |
|---|---|---|
| 8 | PW ACT (AUD) | PW ACT (VID) |
| 7 | PW ACT (SYS) | POWER OVERHEAT |
| 6 | | |
| 5 | S-REEL VH CONT (G) | S-REEL VH CONT (X) |
| 4 | T-REEL VH CONT (G) | T-REEL VH CONT (X) |
| 3 | CAP VH CONT (G) | CAP VH CONT (X) |
| 2 | DRUM VH CONT (G) | DRUM VH CONT (X) |
| 1 | | POWER SENSE |

### SE-49

CN324

| | B | A |
|---|---|---|
| 15 | CTS | RTS |
| 14 | RS 232C SELECT | RS 232C SENSE |
| 13 | -12V | +12V |
| 12 | GND | |
| 11 | REMOTE OUT | +5V |
| 10 | REM 2A IN (-) | REM 2A IN (+) |
| 9 | REM 2B IN (-) | REM 2B IN (+) |
| 8 | PRIORITY 2B IN | PRIORITY 2A IN |
| 7 | REM 2A OUT (-) | REM 2A OUT (+) |
| 6 | REM 2B OUT (-) | REM 2B OUT (+) |
| 5 | PRIORITY 2B OUT | PRIORITY 2A OUT |
| 4 | RS 232C RX | RS 232C TX |
| 3 | CCJ RX | CCJ TX |
| 2 | TAPE DIR | TIMER PULSE |
| 1 | GND | CTL OUT |

①

### SV-90

CN315 (CNA)

| | C | B | A |
|---|---|---|---|
| 1 | GND | | |
| 2 | +12V | | |
| 3 | -12V | | |
| 4 | | | |
| 5 | | | |
| 6 | | REC CTL | PB CTL |
| 7 | TRACKING (G) | TRACKING (Y) | TRACKING (X) |
| 8 | TRACKING OFF | | |
| 9 | | | |
| 10 | | | |
| 11 | REF SYNC | | |
| 12 | | | HEAD HOURS |
| 13 | | | |
| 14 | | | |
| 15 | | | |
| 16 | | AO SPARE 1 | TAPE SPEED |
| 17 | | | |
| 18 | CAP FG (G) | | CAP FG A (X) |
| 19 | | | CAP FG B (X) |
| 20 | DRUM FG (G) | | DRUM FG A (X) |
| 21 | | | DRUM RG B (X) |
| 22 | DRUM PG | DRUM MDA (X) | CAP MDA (X) |
| 23 | | DRUM MDA (G) | CAP MDA (G) |
| 24 | ~BOARD1 | | OVERHEAT-1 |
| 25 | | T-REEL TCW | S-REEL TCW |
| 26 | S-REEL MDA (X) | T-REEL FG A | S-REEL FG A |
| 27 | S-REEL MDA (G) | T-REEL DUTY A | S-REEL DUTY A |
| 28 | T-REEL MDA (X) | T-REEL FG B | S-REEL FG B |
| 29 | T-REEL MDA (G) | T-REEL DUTY B | S-REEL DUTY B |
| 30 | | T-REEL SW | S-REEL SW |
| 31 | ~BOARD2 | | OVERHEAT-2 |
| 32 | GND | | |

CN316 (CNB)

| | C | B | A |
|---|---|---|---|
| 1 | | | |
| 2 | S-REEL TEN (G) | S-TEN GAIN | S-REEL TEN (X) |
| 3 | HARD RESET | | |
| 4 | ~BOARD 3 | SV SPARE OUT-2 | SV SPARE OUT-1 |
| 5 | THREAD CONT | PINCH SOL | BRAKE SOL |
| 6 | BLOWER CONT 2 | IP DRIVE | BLOWER CONT 1 |
| 7 | TAPE DET | UNTHREAD SW | THREAD SW |
| 8 | SV SPARE IN-2 | SV SPARE IN-1 | SNS 0 |
| 9 | | | |
| 10 | TAPE DIR | | CTL OUT |
| 11 | | | |
| 12 | | | |
| 13 | | REF V | |
| 14 | | | REF 2 |
| 15 | ~REM CS | ~AU CS | ~RECALL |
| 16 | ~VO CS | ~TBC CS | ~STORE |
| 17 | ~OP CS | ~RD CS | ~NV CS |
| 18 | ~CM CS | ~TC CS | ~SV WAIT |
| 19 | | SV A10 | SV A9 |
| 20 | SV A8 | SV A7 | SV A6 |
| 21 | SV A5 | SV A4 | SV A3 |
| 22 | SV A2 | SV A1 | SV A0 |
| 23 | ~CPU RESET | SV D7 | SV D6 |
| 24 | SV D5 | SV D4 | SV D3 |
| 25 | SV D2 | SV D1 | SV D0 |
| 26 | ~SV RD | ~RESET | ~SV WR |
| 27 | POWER OVERHEAT | POWER SENSE | PW ACT (SYS) |
| 28 | -5V | | |
| 29 | +5V | | |
| 30 | +5V | | |
| 31 | GND | | |
| 32 | GND | | |

CN331

| | B | A |
|---|---|---|
| 20 | | |
| 19 | | REC RELAY |
| 18 | ERASE CTRL2 | ERASE CTRL1 |
| 17 | PW ACT (VID) | -12V |
| 16 | GND | +12V |
| 15 | | CAP FG (G) |
| 14 | CAP FG B (X) | CAP FG A (X) |
| 13 | GND | +12V |
| 12 | | DRUM FG (G) |
| 11 | DRUM FG B (X) | DRUM FG A (X) |
| 10 | GND | +12V |
| 9 | GND | -12V |
| 8 | GND | +12V |
| 7 | HARD RESET | +5V |
| 6 | CAP MDA (G) | CAP MDA (X) |
| 5 | CAP VH CONT (G) | CAP VH CONT (X) |
| 4 | BLOWER CONT2 | ~BOARD1 |
| 3 | DRUM VH CONT (G) | DRUM VH CONT (X) |
| 2 | DRUM MDA (G) | DRUM MDA (X) |
| 1 | DRUM PG | OVERHEAT-1 |

CN332

| | B | A |
|---|---|---|
| 15 | T-REEL TCW | S-REEL TCW |
| 14 | | |
| 13 | S-REEL FG B | S-REEL FG A |
| 12 | S-REEL DUTY B | S-REEL DUTY A |
| 11 | S-REEL VH CONT (G) | S-REEL VH CONT (X) |
| 10 | S-REEL MDA (G) | S-REEL MDA (X) |
| 9 | OVERHEAT-2 | S-REEL SW |
| 8 | -12V | HARD RESET |
| 7 | GND | +5V |
| 6 | GND | +12V |
| 5 | ~BOARD2 | T-REEL SW |
| 4 | T-REEL MDA (G) | T-REEL MDA (X) |
| 3 | T-REEL VH CONT (G) | T-REEL VH CONT (X) |
| 2 | T-REEL DUTY B | T-REEL DUTY A |
| 1 | T-REEL FG B | T-REEL FG A |

CN333

| | B | A |
|---|---|---|
| 17 | SV SPERE OUT-2 | SV SPARE OUT-1 |
| 16 | SV SPARE IN-2 | S-TEN GAIN |
| 15 | S-REEL TEN (G) | S-REEL TEN (X) |
| 14 | -12V | +12V |
| 13 | GND | +5V |
| 12 | GND | THREAD CONT |
| 11 | UNTHREAD SW | THREAD SW |
| 10 | TAPE DET | SENSø |
| 9 | ~BOARD3 | HARD RESET |
| 8 | BRAKE SOL | PINCH SOL |
| 7 | IP DRIVE | BLOWER CONT1 |
| 6 | SV SPARE IN-1 | HEAD HOURS |
| 5 | +5V | GND |
| 4 | -5V | GND |
| 3 | -12V | |
| 2 | GND | |
| 1 | +12V | |

**MB-199 BOARD SIGNAL TABLE (2/2)**
HDD-1000 (J) ; #10001-
HDD-1000 (UC) ; #10001-
HDD-1000 (EK) ; #10001-

## MB-199 BOARD WIRING DIAGRAM(1/3)

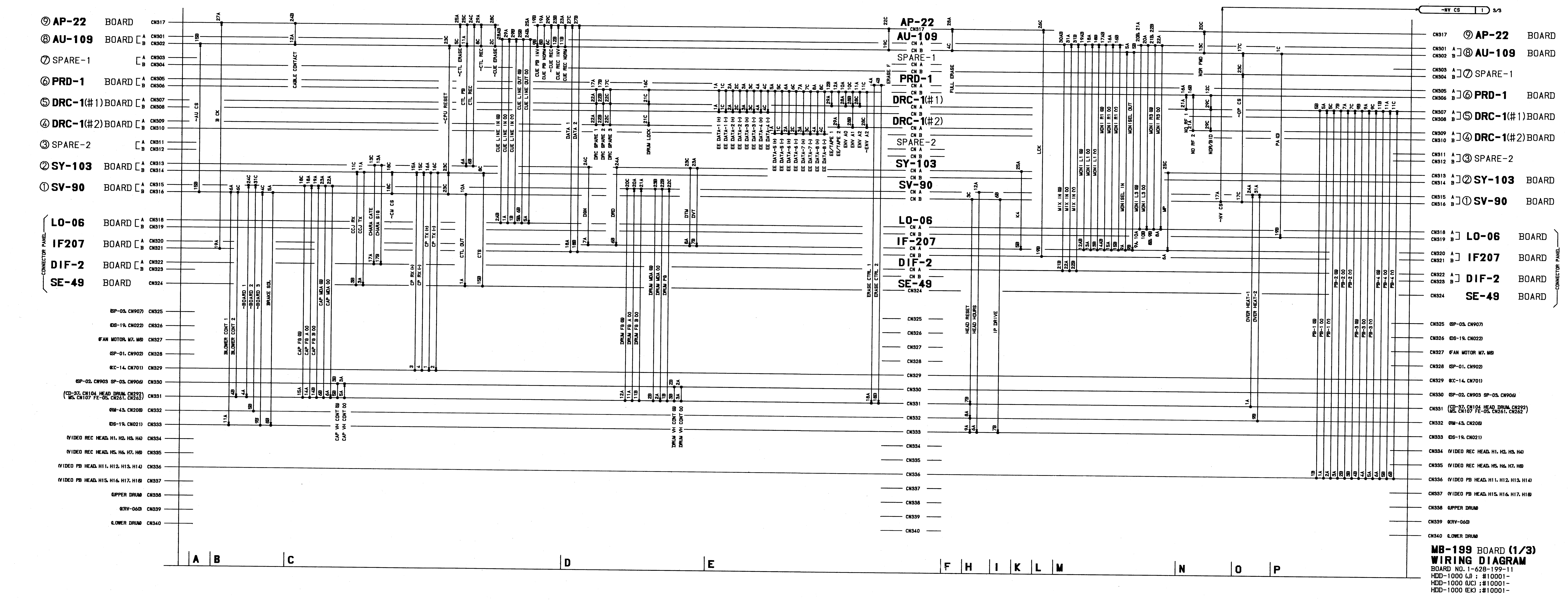
⑨ AP-22 BOARD CN317
⑧ AU-109 BOARD CN301 CN302
⑦ SPARE-1 CN303 CN304
⑥ PRD-1 BOARD CN305 CN306
⑤ DRC-1(#1) BOARD CN307 CN308
④ DRC-1(#2) BOARD CN309 CN310
③ SPARE-2 CN311 CN312
② SY-103 BOARD CN313 CN314
① SV-90 BOARD CN315 CN316
LO-06 BOARD CN318 CN319
IF207 BOARD CN320 CN321
DIF-2 BOARD CN322 CN323
SE-49 BOARD CN324
CONNECTOR PANEL
(SP-03, CN907) CN325
(DS-19, CN022) CN326
(FAN MOTOR M7, M8) CN327
(SP-01, CN902) CN328
(KC-14, CN701) CN329
(SP-02, CN903 SP-03, CN906) CN330
(CD-37, CN104 HEAD DRUM, CN292) (MS, CN107 FE-05, CN261, CN262) CN331
(RM-43, CN208) CN332
(DS-19, CN021) CN333
(VIDEO REC HEAD, H1, H2, H3, H4) CN334
(VIDEO REC HEAD, H5, H6, H7, H8) CN335
(VIDEO PB HEAD, H11, H12, H13, H14) CN336
(VIDEO PB HEAD, H15, H16, H17, H18) CN337
(UPPER DRUM) CN338
(KRV-060) CN339
(LOWER DRUM) CN340
-NV CS
3/3
A
B
C
D
E
F
H
I
K
L
M
N
O
P

**MB-199** BOARD **(1/3)**
**WIRING DIAGRAM**
BOARD NO. 1-628-199-11
HDD-1000 (J) ; #10001-
HDD-1000 (UC) ;#10001-
HDD-1000 (EK) ;#10001-

## MB-199 BOARD WIRING DIAGRAM(2/3)

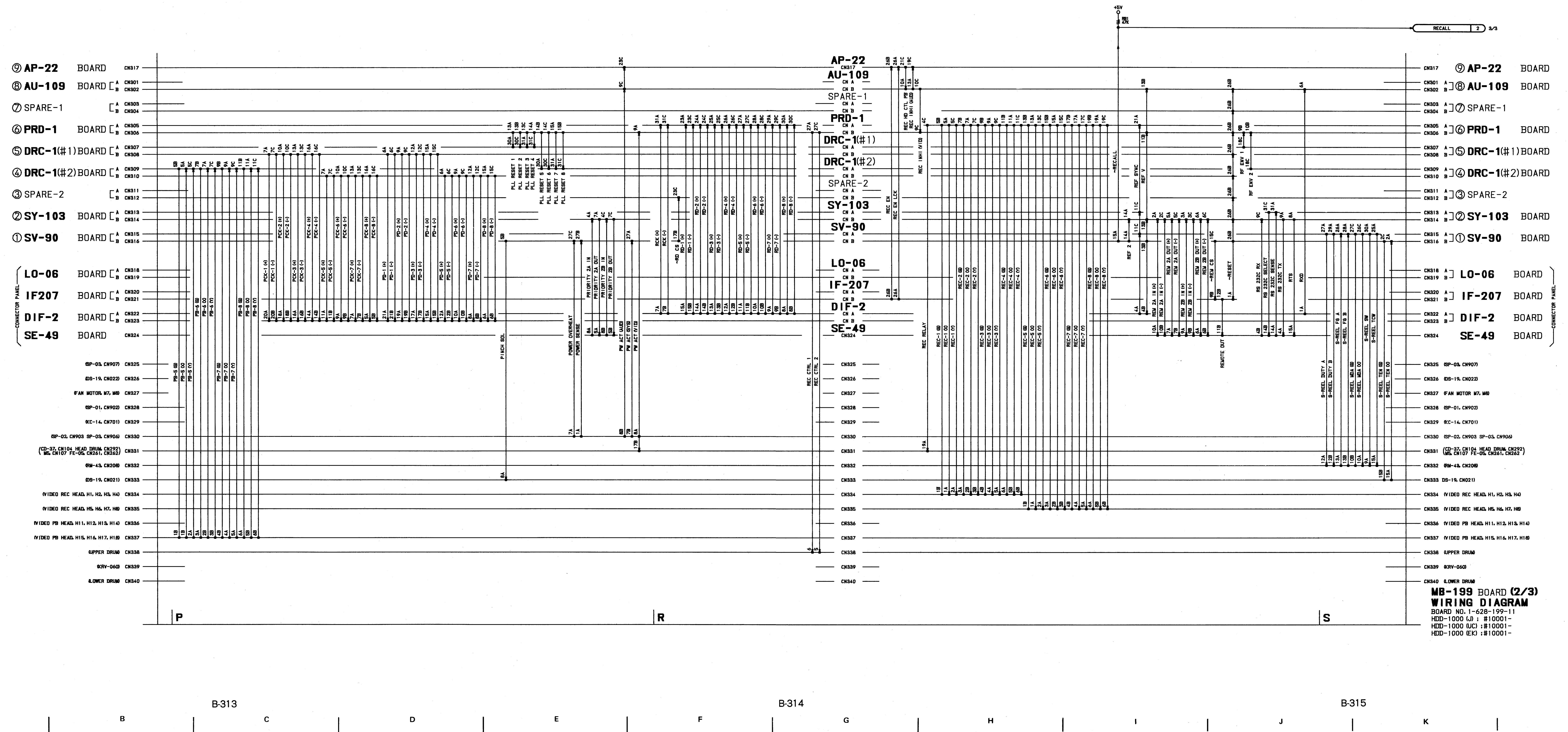
⑨ AP-22 BOARD
⑧ AU-109 BOARD
⑦ SPARE-1
⑥ PRD-1 BOARD
⑤ DRC-1(#1) BOARD
④ DRC-1(#2) BOARD
③ SPARE-2
② SY-103 BOARD
① SV-90 BOARD
LO-06 BOARD
IF207 BOARD
DIF-2 BOARD
SE-49 BOARD
CONNECTOR PANEL
+5V
RECALL
P
R
S
B-313
B-314
B-315
A
B
C
D
E
F
G
H
I
J
K
L
1
2
3
4
5

**MB-199** BOARD **(2/3)**
**WIRING DIAGRAM**
BOARD NO. 1-628-199-11
HDD-1000 (J) : #10001-
HDD-1000 (UC) : #10001-
HDD-1000 (EK) : #10001-

## MB-199 BOARD WIRING DIAGRAM(3/3)

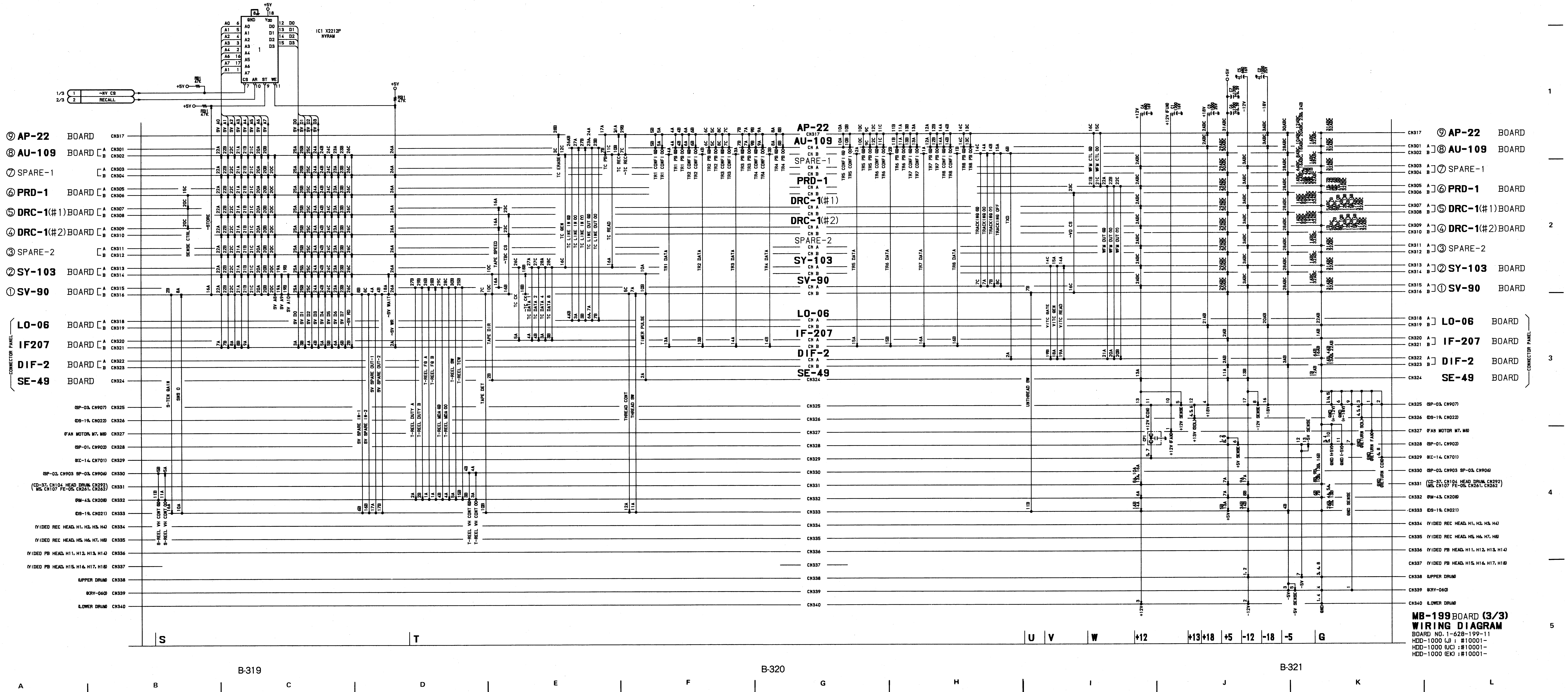
IC1 X2212P NVRAM
+5V
~NV CS
RECALL
1/3
2/3
⑨ AP-22 BOARD CN317
⑧ AU-109 BOARD CN301 CN302
⑦ SPARE-1 CN303 CN304
⑥ PRD-1 BOARD CN305 CN306
⑤ DRC-1(#1) BOARD CN307 CN308
④ DRC-1(#2) BOARD CN309 CN310
③ SPARE-2 CN311 CN312
② SY-103 BOARD CN313 CN314
① SV-90 BOARD CN315 CN316
CONNECTOR PANEL
LO-06 BOARD CN318 CN319
IF207 BOARD CN320 CN321
DIF-2 BOARD CN322 CN323
SE-49 BOARD CN324
(SP-03, CN907) CN325
(DS-19, CN022) CN326
(FAN MOTOR M7, M8) CN327
(SP-01, CN902) CN328
(KC-14, CN701) CN329
(SP-02, CN903 SP-03, CN906) CN330
(CD-37, CN104 HEAD DRUM, CN292) (MS, CN107 FE-05, CN261, CN262) CN331
(RM-43, CN208) CN332
(DS-19, CN021) CN333
(VIDEO REC HEAD, H1, H2, H3, H4) CN334
(VIDEO REC HEAD, H5, H6, H7, H8) CN335
(VIDEO PB HEAD, H11, H12, H13, H14) CN336
(VIDEO PB HEAD, H15, H16, H17, H18) CN337
(UPPER DRUM) CN338
(KRY-060) CN339
(LOWER DRUM) CN340
S-TEN GAIN
SNS O
~STORE
SENSE CTRL
SV SPARE OUT-1
SV SPARE OUT-2
SV SPARE IN-1
SV SPARE IN-2
T-REEL FG A
T-REEL FG B
T-REEL DUTY A
T-REEL DUTY B
T-REEL MDA 00
T-REEL MDA 01
T-REEL SW
T-REEL TCW
TAPE SPEED
~TBC CS
TAPE DIR
TAPE DET
TC ERASE
TC GEN
TC LINE IN
TC LINE OUT
TC READ
TC REC
TIMER PULSE
THREAD CONT
THREAD SW
TR1 DATA
TR2 DATA
TR3 DATA
TR4 DATA
TR5 DATA
TR6 DATA
TR7 DATA
TR8 DATA
TRACKING
TXD
UNTHREAD SW
~VG CS
VITC GATE
VITC GEN
VITC READ
WFM CTL
WFM OUT
S-REEL VH CONT
T-REEL VH CONT
AP-22
AU-109
SPARE-1
PRD-1
DRC-1(#1)
DRC-1(#2)
SPARE-2
SY-103
SV-90
LO-06
IF-207
DIF-2
SE-49
CN A
CN B
+12V
-12V
+5V
-5V
+18V
-18V
+13V
GND
SENSE
S
T
U
V
W
+12
+13
+18
+5
-12
-18
-5
G
B-319
B-320
B-321
A
B
C
D
E
F
G
H
I
J
K
L
1
2
3
4
5

MB-199 BOARD (3/3)
WIRING DIAGRAM
BOARD NO. 1-628-199-11
HDD-1000 (J) : #10001-
HDD-1000 (UC) :#10001-
HDD-1000 (EK) :#10001-

## PS-143 **BOARD (1-621-118-11)**

Component Side

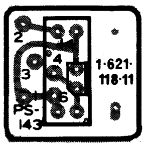
2
4
3
6
1-621-
118-11
PS-
143

1-621-118-11
SOLDER SIDE

## MC-29 **BOARD (1-621-129-11)**

Component Side

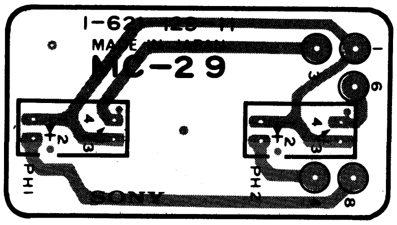
1-621-129-11
MADE IN JAPAN
MC-29
1
3
6
4
2
1
3
PH1
PH2
8
SONY

1-621-129-11 SOLDER SIDE

## DE-18 **BOARD (1-621-125-11)**

Component Side

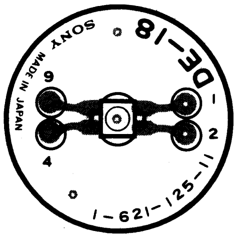
DE-18
SONY
MADE IN JAPAN
9
1
2
4
1-621-125-11

1-621-125-11
SOLDER SIDE

## CN-186 **BOARD (1-621-131-11)**

Solder Side

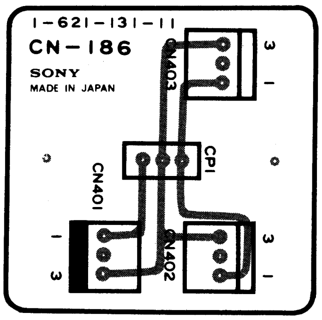
1-621-131-11
CN-186
SONY
MADE IN JAPAN
CN403
3
1
CP1
CN401
1
3
CN402
3
1

1-621-131-11 SOLDER SIDE

## HD-06 **BOARD (1-606-679-11)**

Solder Side

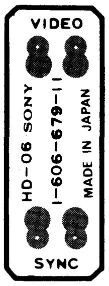
VIDEO
HD-06 SONY
1-606-679-11
MADE IN JAPAN
SYNC

1-606-679-11
SOLDER SIDE

## CH-22 **BOARD (1-628-211-11)**

Solder Side

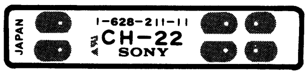
JAPAN
1-628-211-11
CH-22
SONY

1-628-211-11
SOLDER SIDE

## FRAME WIRING : TAPE TRANSPORT(1/2)

**CN-186 BOARD**
**DE-18 BOARD**
**MC-29 BOARD**
**PS-143 BOARD**

PS-143 BOARD
FRONT COVER OPEN/CLOSE SENSOR
TAPE END SENSOR
PM1 S-REEL BRAKE SOL
PM2 T-REEL BRAKE SOL
PM3 CAPSTAN PINCH SOL
DS-19 BOARD
M3 SUPPLY REEL MOTOR
M4 TAKE-UP REEL MOTOR
M5 CAPSTAN MOTOR
DRUM MOTOR
RM-43 BOARD
CD-37 BOARD
VIDEO REC HEAD
VIDEO ERASE HEAD
VIDEO PB HEAD
HEAD DRUM ASSY
HEAD DRUM ASSY: DHH-01A-R
UPPRE DRUM ASSY: DHR-01-R
UDR-2 BOARD
UDR-1 BOARD
UDR-3 BOARD
LDR-4 BOARD
LDR-1 BOARD
LDR-2 BOARD
LDR-3 BOARD
ROTARY TRANSFORMER
UPPER DRUM
LOWER DRUM
SR-37 BOARD
SR-38 BOARD
SR-44 BOARD
SLIP RING BRUSH
M10 S-SIDE BLOWER
FE-05 BOARD
MB-199 BOARD
M1 THREADING MOTOR EN35-H1097B
PERMANENT MAGNET
UNTHREAD SENSOR
THREAD SENSOR
MC-29 BOARD
TENSION DETECTOR
DE-18 BOARD
M11 T-SIDE BLOWER
HEAD HOURS
KRV 060
DJ-150AT-75
POWER UNIT
SP-02 BOARD POWER SUPPLY
SP-03 BOARD POWER SUPPLY
SP-01 BOARD POWER SUPPLY
KC-14 BOARD CONTROL PANEL
CN-186 BOARD
FAN MOTOR ASF8910065
A
B
C
D
E
F
G
H
I
J
K
L
M
N
O
P

**FRAME WIRING**
**TAPE TRANSPORT (1/2)**
HDD-1000 (J) ; #10001-
HDD-1000 (UC) ;#10001-
HDD-1000 (EK) ;#10001-

## FRAME WIRING : TAPE TRANSPORT(2/2)

**HD-06 BOARD**

**CH-22 BOARD**

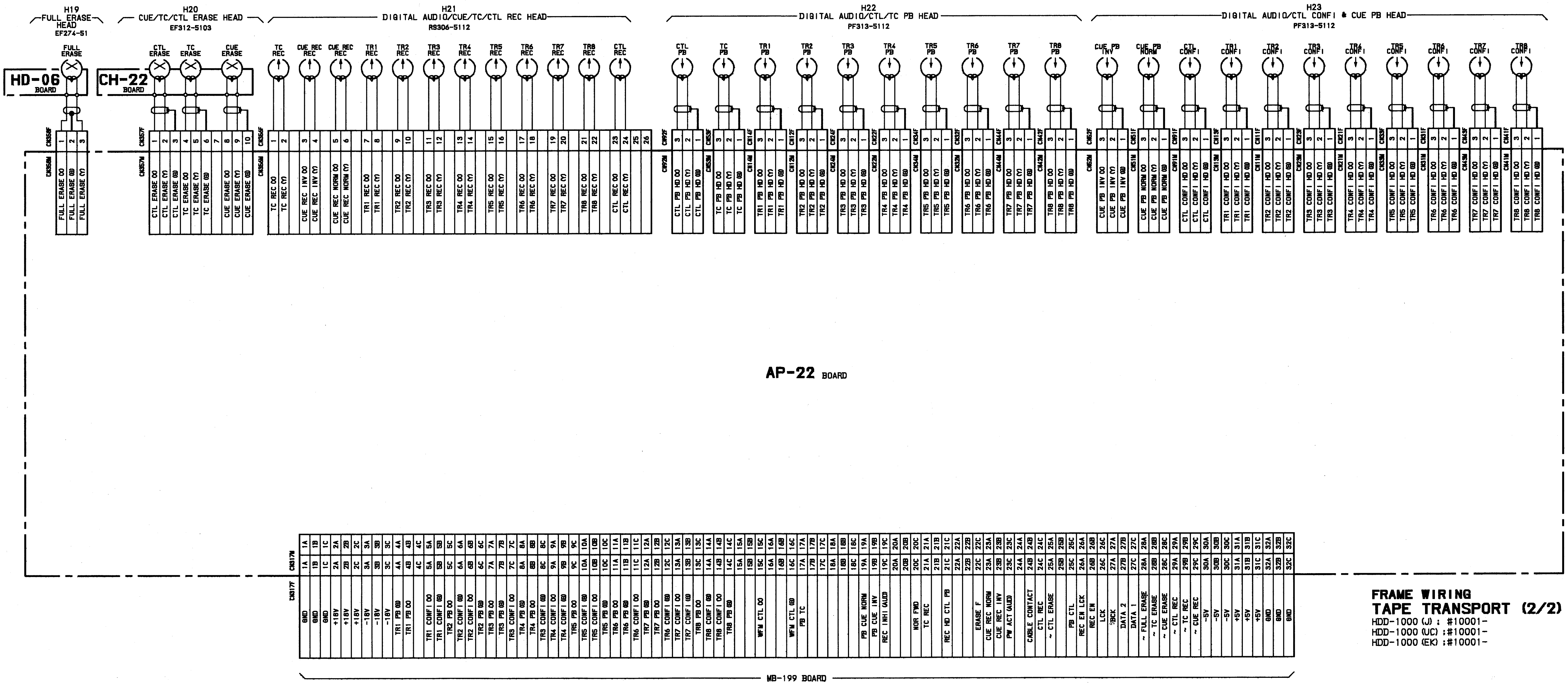
H19
FULL ERASE HEAD
EF274-51
FULL ERASE
HD-06 BOARD
H20
CUE/TC/CTL ERASE HEAD
EF312-5103
CTL ERASE
TC ERASE
CUE ERASE
CH-22 BOARD
H21
DIGITAL AUDIO/CUE/TC/CTL REC HEAD
RS306-5112
TC REC
CUE REC REC
CUE REC REC
TR1 REC
TR2 REC
TR3 REC
TR4 REC
TR5 REC
TR6 REC
TR7 REC
TR8 REC
CTL REC
H22
DIGITAL AUDIO/CTL/TC PB HEAD
PF313-5112
CTL PB
TC PB
TR1 PB
TR2 PB
TR3 PB
TR4 PB
TR5 PB
TR6 PB
TR7 PB
TR8 PB
H23
DIGITAL AUDIO/CTL CONFI & CUE PB HEAD
PF313-5112
CUE PB INV
CUE PB NORM
CTL CONFI
TR1 CONFI
TR2 CONFI
TR3 CONFI
TR4 CONFI
TR5 CONFI
TR6 CONFI
TR7 CONFI
TR8 CONFI
FULL ERASE (X)
FULL ERASE (G)
FULL ERASE (Y)
CTL ERASE (X)
CTL ERASE (Y)
CTL ERASE (G)
TC ERASE (X)
TC ERASE (Y)
TC ERASE (G)
CUE ERASE (X)
CUE ERASE (Y)
CUE ERASE (G)
TC REC (X)
TC REC (Y)
CUE REC INV (X)
CUE REC INV (Y)
CUE REC NORM (X)
CUE REC NORM (Y)
TR1 REC (X)
TR1 REC (Y)
TR2 REC (X)
TR2 REC (Y)
TR3 REC (X)
TR3 REC (Y)
TR4 REC (X)
TR4 REC (Y)
TR5 REC (X)
TR5 REC (Y)
TR6 REC (X)
TR6 REC (Y)
TR7 REC (X)
TR7 REC (Y)
TR8 REC (X)
TR8 REC (Y)
CTL REC (X)
CTL REC (Y)
AP-22 BOARD
CN317M
CN317F
GND
+18V
-18V
TR1 PB (X)
TR1 PB (Y)
TR1 CONFI (X)
WFM CTL (X)
WFM CTL (G)
PB TC
PB CUE NORM
PB CUE INV
REC INHI (AUD)
NOR FWD
TC REC
REC HD CTL PB
ERASE F
CUE REC NORM
CUE REC INV
PW ACT (AUD)
CABLE CONTACT
CTL REC
~ CTL ERASE
PB CTL
REC EN LCK
REC EN
LCK
BCK
DATA 2
DATA 1
~ FULL ERASE
~ TC ERASE
~ CUE ERASE
~ CTL REC
~ TC REC
~ CUE REC
-5V
+5V
MB-199 BOARD

**FRAME WIRING**
**TAPE TRANSPORT (2/2)**
HDD-1000 (J) ; #10001-
HDD-1000 (UC) ; #10001-
HDD-1000 (EK) ; #10001-

## SW-270 BOARD (1-628-215-11)

Component Side

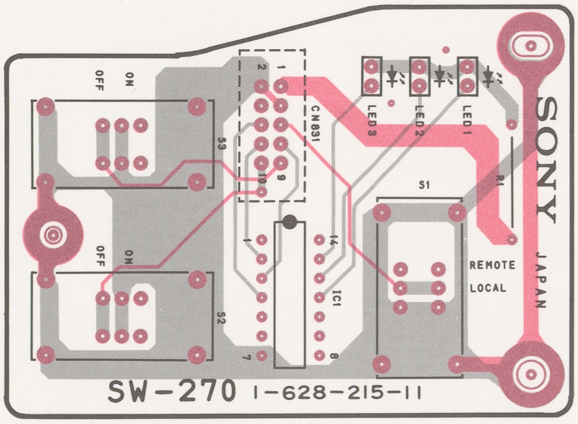
OFF
ON
S3
OFF
ON
S2
2
1
10
9
CN831
1
14
7
8
IC1
LED3
LED2
LED1
S1
R1
REMOTE
LOCAL
SONY
JAPAN
SW-270 1-628-215-11

1-628-215-11 COMPONENT SIDE

1-628-215-11 SOLDER SIDE

## FRAME WIRING : LEVEL CONTROL PANEL

**SW-270 BOARD**

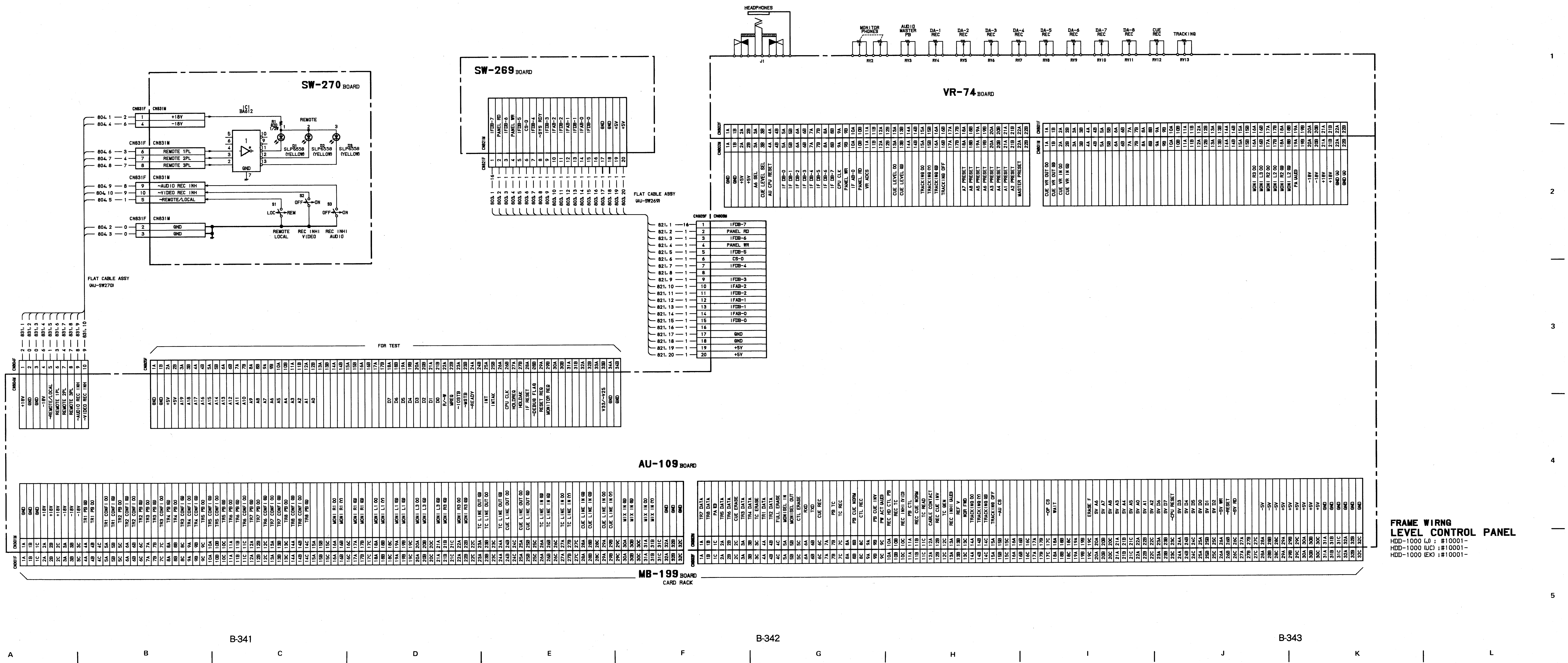
SW-270 BOARD
IC1 BA612
REMOTE
D1 SLP6558 (YELLOW)
D2 SLP6558 (YELLOW)
D3 SLP6558 (YELLOW)
S1 LOC REM
S2 OFF ON
S3 OFF ON
REMOTE LOCAL
REC INH1 VIDEO
REC INH1 AUDIO
CN831F CN831M
+18V
-18V
REMOTE 1PL
REMOTE 2PL
REMOTE 3PL
~AUDIO REC INH
~VIDEO REC INH
~REMOTE/LOCAL
GND
FLAT CABLE ASSY (AU-SW270)
SW-269 BOARD
FLAT CABLE ASSY (AU-SW269)
CN805F CN805M
IFDB-7
PANEL RD
IFDB-6
PANEL WR
IFDB-5
CS-0
IFDB-4
IFDB-3
IFAB-2
IFDB-2
IFAB-1
IFDB-1
IFAB-0
IFDB-0
GND
+5V
HEADPHONES
J1
MONITOR PHONES
AUDIO MASTER PB
DA-1 REC
DA-2 REC
DA-3 REC
DA-4 REC
DA-5 REC
DA-6 REC
DA-7 REC
DA-8 REC
CUE REC
TRACKING
RV2
RV3
RV4
RV5
RV6
RV7
RV8
RV9
RV10
RV11
RV12
RV13
VR-74 BOARD
FOR TEST
AU-109 BOARD
MB-199 BOARD
CARD RACK
1
2
3
4
5
B-341
B-342
B-343
A
B
C
D
E
F
G
H
I
J
K
L

**FRAME WIRNG**
**LEVEL CONTROL PANEL**
HDD-1000 (J) ; #10001-
HDD-1000 (UC) ; #10001-
HDD-1000 (EK) ; #10001-

## FRAME WIRING : FUNCTION CONTROL PANEL

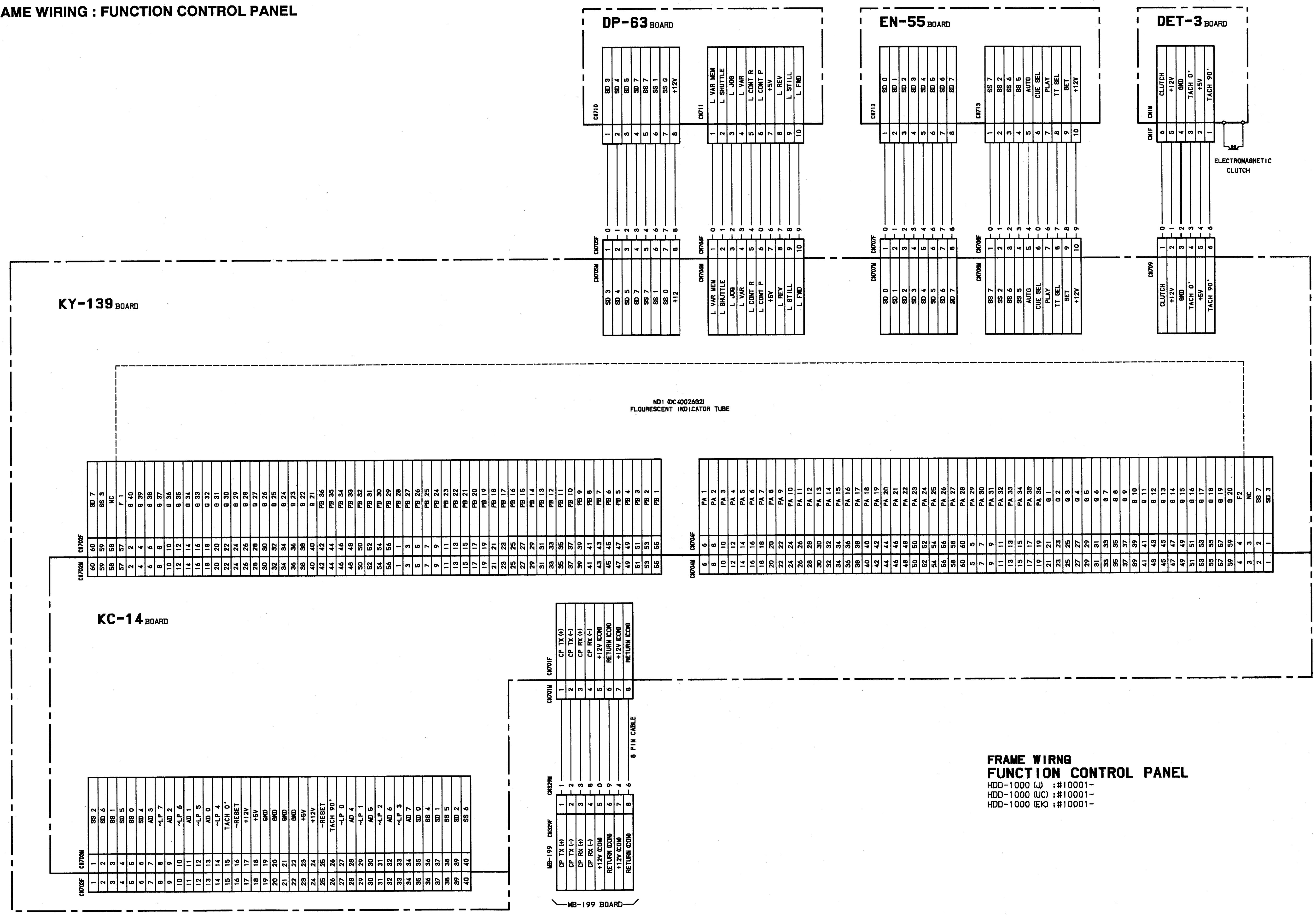
DP-63 BOARD
CN710
SD 3
SD 4
SD 5
SD 7
SS 7
SS 1
SS 0
+12V
CN711
L VAR MEM
L SHUTTLE
L JOG
L VAR
L CONT R
L CONT P
+5V
L REV
L STILL
L FWD
EN-55 BOARD
CN712
SD 0
SD 1
SD 2
SD 3
SD 4
SD 5
SD 6
SD 7
CN713
SS 7
SS 2
SS 6
SS 5
AUTO
CUE SEL
PLAY
TT SEL
SET
+12V
DET-3 BOARD
CN1M
CN1F
CLUTCH
+12V
GND
TACH 0°
+5V
TACH 90°
ELECTROMAGNETIC CLUTCH
CN705F
CN705M
CN706F
CN706M
CN707F
CN707M
CN708F
CN708M
CN709
KY-139 BOARD
ND1 (DC4002682)
FLOURESCENT INDICATOR TUBE
CN702F
CN702M
SD 7
SS 3
NC
F 1
G 40
G 39
G 38
G 37
G 36
G 35
G 34
G 33
G 32
G 31
G 30
G 29
G 28
G 27
G 26
G 25
G 24
G 23
G 22
G 21
PB 36
PB 35
PB 34
PB 33
PB 32
PB 31
PB 30
PB 29
PB 28
PB 27
PB 26
PB 25
PB 24
PB 23
PB 22
PB 21
PB 20
PB 19
PB 18
PB 17
PB 16
PB 15
PB 14
PB 13
PB 12
PB 11
PB 10
PB 9
PB 8
PB 7
PB 6
PB 5
PB 4
PB 3
PB 2
PB 1
CN704F
CN704M
PA 1
PA 2
PA 3
PA 4
PA 5
PA 6
PA 7
PA 8
PA 9
PA 10
PA 11
PA 12
PA 13
PA 14
PA 15
PA 16
PA 17
PA 18
PA 19
PA 20
PA 21
PA 22
PA 23
PA 24
PA 25
PA 26
PA 27
PA 28
PA 29
PA 30
PA 31
PA 32
PA 33
PA 34
PA 35
PA 36
G 1
G 2
G 3
G 4
G 5
G 6
G 7
G 8
G 9
G 10
G 11
G 12
G 13
G 14
G 15
G 16
G 17
G 18
G 19
G 20
F2
NC
SS 7
SD 3
KC-14 BOARD
CN701F
CN701M
CP TX (+)
CP TX (-)
CP RX (+)
CP RX (-)
+12V (CON)
RETURN (CON)
+12V (CON)
RETURN (CON)
8 PIN CABLE
CN329M
CN329F
MB-199
MB-199 BOARD
CN703M
CN703F
SS 2
SD 6
SS 1
SD 5
SS 0
SD 4
AD 3
~LP 7
AD 2
~LP 6
AD 1
~LP 5
AD 0
~LP 4
TACH 0°
~RESET
+12V
+5V
GND
GND
GND
+5V
+12V
~RESET
TACH 90°
~LP 0
AD 4
~LP 1
AD 5
~LP 2
AD 6
~LP 3
AD 7
SD 0
SS 4
SD 1
SS 5
SD 2
SS 6
FRAME WIRNG
FUNCTION CONTROL PANEL
HDD-1000 (J) :#10001-
HDD-1000 (UC) :#10001-
HDD-1000 (EK) :#10001-
1
2
3
4
5
A
B
C
D
E
F
G
H

## SE-49 **BOARD (1-621-097-11)**

Component Side

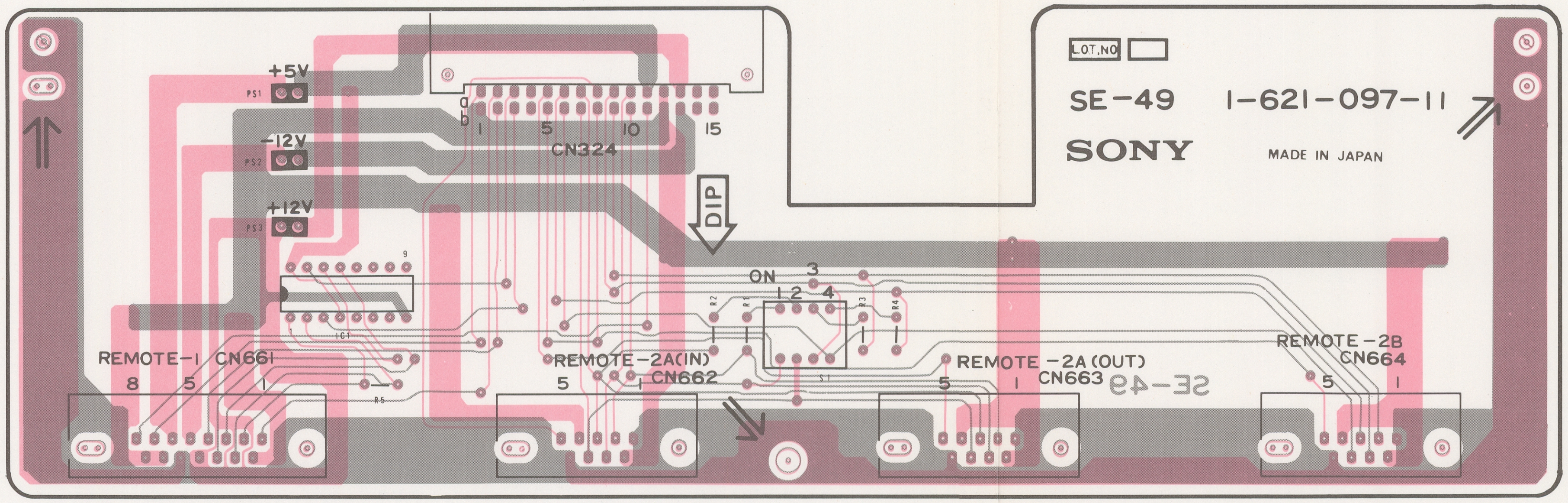
+5V
PS1
-12V
PS2
+12V
PS3
CN324
1
5
10
15
DIP
IC1
ON
1 2 3 4
S1
R1
R2
R3
R4
R5
REMOTE-1 CN661
8 5 1
REMOTE-2A(IN) CN662
5 1
REMOTE-2A(OUT) CN663
5 1
REMOTE-2B CN664
5 1
LOT.NO
SE-49 1-621-097-11
SONY
MADE IN JAPAN

1-621-097-11 COMPONENT SIDE

1-621-097-11 SOLDER SIDE

## FRAME WIRING : CONNECTOR PANEL

**SE-49 BOARD**

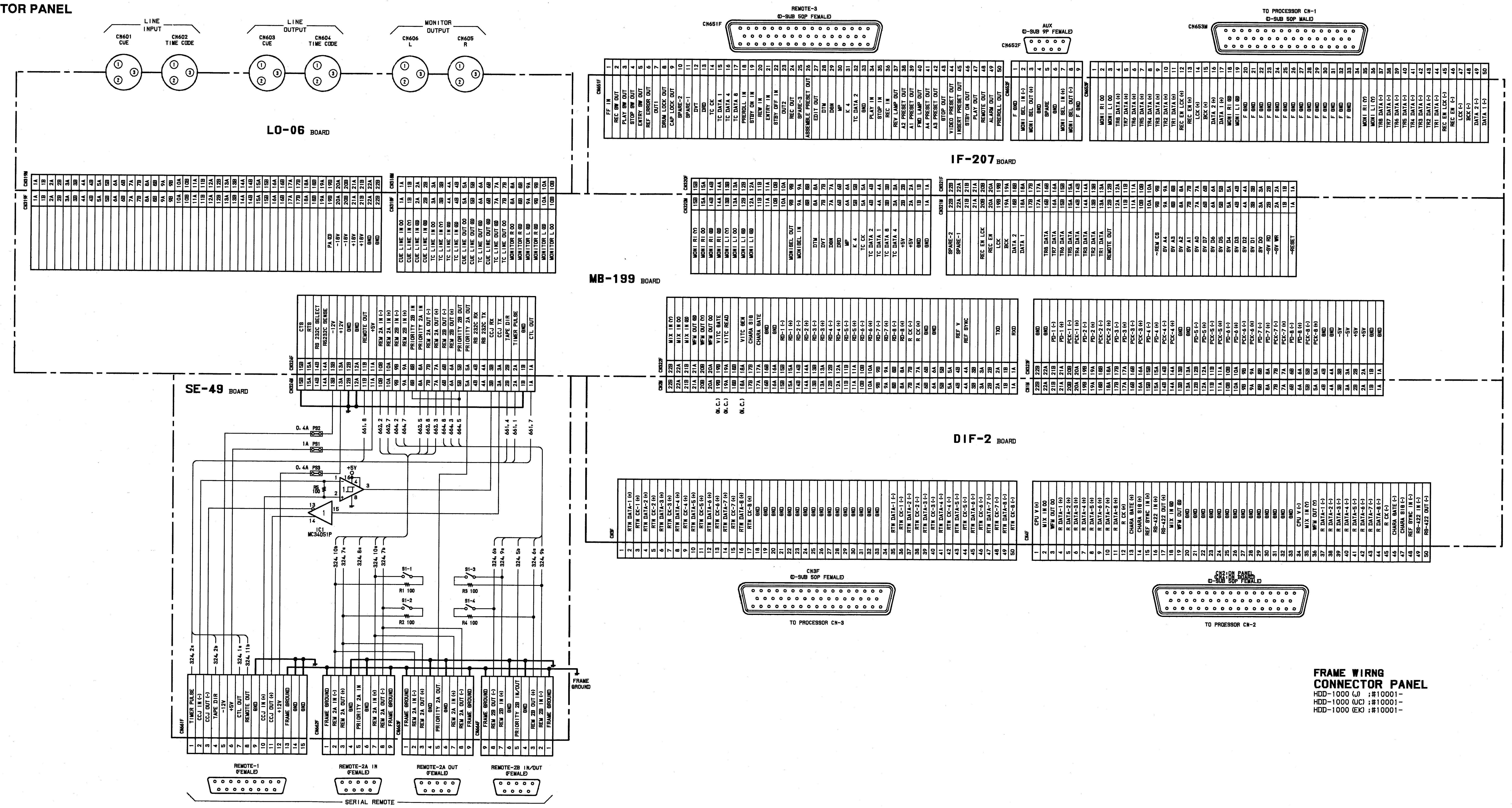
LINE INPUT
CN601 CUE
CN602 TIME CODE
LINE OUTPUT
CN603 CUE
CN604 TIME CODE
MONITOR OUTPUT
CN606 L
CN605 R
LO-06 BOARD
CN310M
CN310F
CN318M
CN318F
MB-199 BOARD
SE-49 BOARD
CN324M
CN324F
IC1 MC34051P
0.4A PS2
1A PS1
0.4A PS3
+5V
S1-1 R1 100
S1-2 R2 100
S1-3 R3 100
S1-4 R4 100
CN641F
CN642F
CN643F
CN644F
REMOTE-1 (FEMALE)
REMOTE-2A IN (FEMALE)
REMOTE-2A OUT (FEMALE)
REMOTE-2B IN/OUT (FEMALE)
SERIAL REMOTE
FRAME GROUND
REMOTE-3 (D-SUB 50P FEMALE)
CN651F
AUX (D-SUB 9P FEMALE)
CN652F
TO PROCESSOR CN-1 (D-SUB 50P MALE)
CN653M
IF-207 BOARD
CN320F
CN320M
CN321F
CN321M
DIF-2 BOARD
CN322F
CN1M
CN323F
CN3F
CN4F
CN3F (D-SUB 50P FEMALE)
TO PROCESSOR CN-3
CN2:ON PANEL (D-SUB 50P FEMALE)
TO PROCESSOR CN-2
A B C D E F G H I J K L
1 2 3 4 5

**FRAME WIRNG**
**CONNECTOR PANEL**
HDD-1000 (J) ;#10001-
HDD-1000 (UC) ;#10001-
HDD-1000 (EK) ;#10001-

## AC-92 BOARD (1-628-216-11)

Component Side

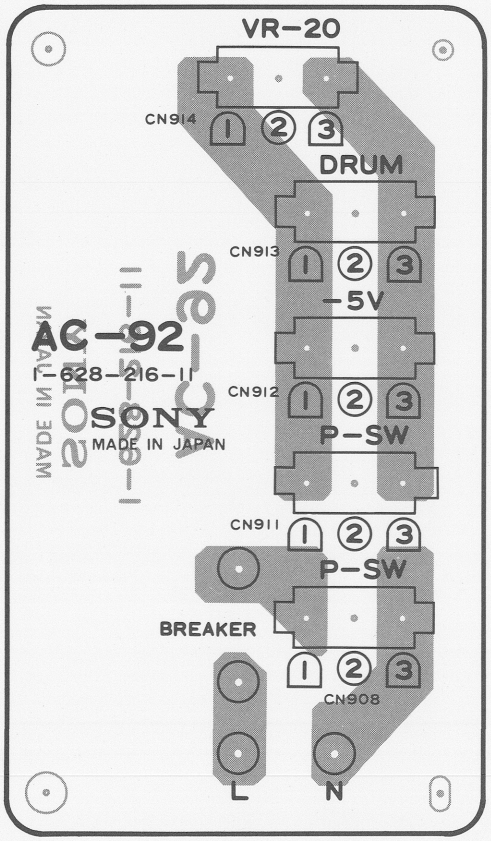
VR-20
CN914
1 2 3
DRUM
CN913
1 2 3
-5V
AC-92
1-628-216-11
SONY
MADE IN JAPAN
CN912
1 2 3
P-SW
CN911
1 2 3
P-SW
BREAKER
1 2 3
CN908
L
N

1-628-216-11 SOLDER SIDE

## FRAME WIRING : POWER SUPPLY

**AC-92 BOARD**

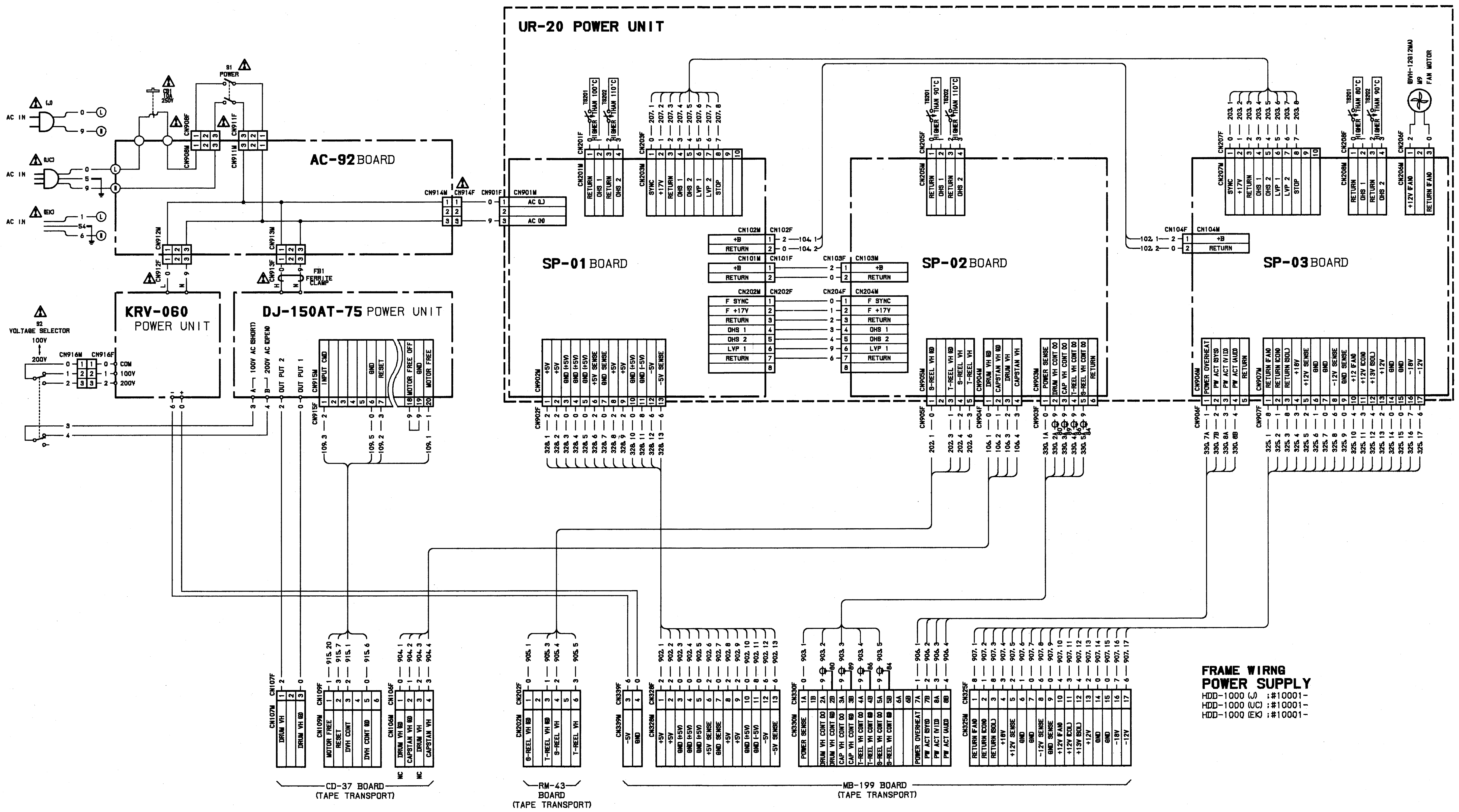
UR-20 POWER UNIT
AC-92 BOARD
KRV-060 POWER UNIT
DJ-150AT-75 POWER UNIT
SP-01 BOARD
SP-02 BOARD
SP-03 BOARD
AC IN (J)
AC IN (UC)
AC IN (EK)
S1 POWER
S2 VOLTAGE SELECTOR
100V
200V
FB1 FERRITE CLAMP
CN908F
CN908M
CN911F
CN911M
CN912M
CN912F
CN913M
CN913F
CN914M
CN914F
CN901F
CN901M
AC (L)
AC (N)
CN916M
CN916F
COM
100V
200V
CN915M
CN915F
INPUT GND
GND
RESET
MOTOR FREE OFF
GND
MOTOR FREE
CN902M
CN902F
+5V
GND (+5V)
+5V SENSE
GND (-5V)
-5V
-5V SENSE
CN201F
CN201M
CN203F
CN203M
TB201 HIGHER THAN 100°C
TB202 HIGHER THAN 110°C
RETURN
OHS 1
OHS 2
SYNC
+17V
LVP 1
LVP 2
STOP
CN102M
CN102F
CN101M
CN101F
CN202M
CN202F
+B
RETURN
F SYNC
F +17V
CN103F
CN103M
CN204F
CN204M
CN205F
CN205M
TB201 HIGHER THAN 90°C
TB202 HIGHER THAN 110°C
CN905M
CN905F
S-REEL VH (E)
T-REEL VH (E)
S-REEL VH
T-REEL VH
CN904M
CN904F
DRUM VH (E)
CAPSTAN VH (E)
DRUM VH
CAPSTAN VH
CN903M
CN903F
POWER SENSE
DRUM VH CONT (C)
CAP VH CONT (C)
T-REEL VH CONT (C)
S-REEL VH CONT (C)
CN104F
CN104M
CN207F
CN207M
CN208F
CN208M
TB201 HIGHER THAN 80°C
TB202 HIGHER THAN 90°C
CN206F
CN206M
+12V (FAN)
RETURN (FAN)
M9 FAN MOTOR
(BVH-1281MA)
CN906M
CN906F
POWER OVERHEAT
PW ACT (SYS)
PW ACT (VID)
PW ACT (AUD)
CN907M
CN907F
RETURN (FAN)
RETURN (CON)
RETURN (SOL)
+18V
+12V SENSE
GND
-12V SENSE
GND SENSE
+12V (FAN)
+12V (CON)
+13V (SOL)
+12V
-18V
-12V
CN107F
CN107M
CN109F
CN109M
CN106F
CN106M
DRUM VH
DRUM VH (E)
MOTOR FREE
RESET
DVH CONT
DVH CONT (E)
CAPSTAN VH (E)
CAPSTAN VH
NC
CD-37 BOARD (TAPE TRANSPORT)
CN202F
CN202M
S-REEL VH (E)
T-REEL VH (E)
RM-43 BOARD (TAPE TRANSPORT)
CN339F
CN339M
CN328F
CN328M
CN330F
CN330M
CN325F
CN325M
MB-199 BOARD (TAPE TRANSPORT)

**FRAME WIRNG**
**POWER SUPPLY**
HDD-1000 (J) ;#10001-
HDD-1000 (UC) ;#10001-
HDD-1000 (EK) ;#10001-

# SECTION C
# SEMICONDUCTOR PIN ASSIGNMENTS

この章の図の中には互換性のないダイオード，トランジスタ，ICが併記されていることがあります。部品を交換するときには必ず部品表を参照してください。
等価回路はICメーカーのData Bookに従いました。

The chart in this section may sometimes show diodes, transistors, and ICs that are not interchangeable. When replacing a component, be sure to refer to the parts list. The circuit diagram of each IC is obtained from the IC data book published by the manufacturer.

| TYPE | PAGE |
|---|---|
| 10E-2 | C-3 |
| 10YD ? ? | C-3 |
| 1SS106 | C-3 |
| 1SS119 | C-3 |
| 1SS148 | C-3 |
| 1SS198 | C-3 |
| 1SS97-1 | C-3 |
| 1SV134 | C-3 |
| 2SA1005-L | C-4 |
| 2SA1013 | C-4 |
| 2SA1077 | C-4 |
| 2SA1115 | C-4 |
| 2SA1175 | C-4 |
| 2SA1493 | C-4 |
| 2SA952 | C-4 |
| 2SA979 | C-4 |
| 2SB1016 | C-4 |
| 2SB733 | C-4 |
| 2SB739 | C-4 |
| 2SC1252 | C-4 |
| 2SC1826 | C-4 |
| 2SC1986 | C-4 |
| 2SC2369 | C-4 |
| 2SC2383 | C-4 |
| 2SC2458 | C-4 |
| 2SC2603 | C-4 |
| 2SC2724 | C-4 |
| 2SC2837 | C-4 |
| 2SC3327 | C-4 |
| 2SC3356 | C-4 |
| 2SC3357 | C-4 |
| 2SC3857 | C-4 |
| 2SC4071 | C-4 |
| 2SC4072-TH | C-4 |
| 2SD1134 | C-4 |
| 2SD1407 | C-4 |
| 2SD1408 | C-4 |
| 2SD734 | C-4 |
| 2SD774-4 | C-4 |
| 2SD788 | C-4 |
| 2SD789 | C-4 |
| 2SK523 | C-4 |
| 74AC244PC | C-26 |
| 74AC32PC | C-23 |
| 74ACT138PC | C-24 |
| 74ACT245PC | C-27 |
| 74F244PC | C-19 |
| AA4553K | C-3 |
| AM26LS30PC | C-38 |
| AM26LS31PC | C-38 |
| AM26LS32PC | C-38 |
| AM6685DL | C-38 |
| BA612 | C-20 |
| BA707 | C-44 |
| BR4553K | C-3 |
| BX1225 | C-5 |
| CA3080E | C-38 |
| CD74HC4015E | C-30 |
| CF77049N | C-36 |
| CF77074NT | C-37 |
| CX23028 | C-11 |
| CX23065 | C-11 |
| CX7907A | C-5 |
| CX7912A | C-7 |
| CX7913A | C-9 |
| CXA1194M | C-11 |
| CXA1297P | C-11 |
| CXD1095Q | C-12 |
| CXK5816SP-15L | C-12 |
| CXK5864BP-10L | C-13 |
| CXQ70108P-8 | C-14 |
| CXQ71011P | C-15 |
| CXQ71051P | C-15 |
| CXQ71054P | C-16 |
| CXQ71059P | C-16 |
| DA210S | C-3 |
| DAN209S | C-3 |
| DAP209S | C-3 |
| DASH012 | C-37 |
| DM208 | C-4 |
| DM211 | C-4 |
| DTA114ES | C-4 |
| DTA114TS | C-4 |
| DTA124ES | C-4 |
| DTC114ES | C-4 |
| DTC124EK | C-4 |
| DTC124ES | C-4 |
| DTC144ES | C-4 |
| EAA5504S | C-3 |
| EBG5504S | C-3 |
| EBR5504S | C-3 |
| EQA02- ? ? ? | C-3 |
| ERA81-004 | C-3 |
| ERA81-005 | C-3 |
| ERA84-009 | C-3 |
| ESAC25-02C | C-3 |
| ESAC25-02D | C-3 |
| ESAC25-04C | C-3 |
| FC54M | C-3 |
| GP-1S05 | C-3 |
| HD10101 | C-17 |
| HI1-0201-5 | C-39 |
| HM6116ALSP-12 | C-33 |
| HM6264LP-15 | C-33 |
| LM2903DQ | C-39 |
| LN25RP | C-3 |
| LN35BP | C-3 |
| LT1028CN8 | C-39 |
| LT9101D | C-3 |
| LT9101N | C-3 |
| M5201L | C-39 |
| M54516P | C-20 |
| M54517P | C-20 |
| M5F78 ? ? | C-44 |
| M5F79 ? ? | C-45 |
| MB81C68A-25P | C-32 |
| MB8422-90LP | C-32 |
| MBM27C256A-25 | C-34 |
| MBM27C256H-10 | C-34 |
| MBM27C64-25 | C-33 |
| MC10101L | C-17 |
| MC10H107L | C-17 |
| MC10H115L | C-17 |
| MC10H116L | C-17 |
| MC10H117L | C-17 |
| MC10H131L | C-17 |
| MC12090L | C-17 |
| MC14002BCP | C-20 |
| MC14021BCP | C-20 |
| MC14046BCP | C-20 |
| MC14051BCP | C-21 |
| MC14053BCP | C-21 |
| MC14052BCP | C-21 |
| MC14070BCP | C-21 |
| MC14094BCP | C-22 |
| MC34051P | C-38 |
| MC5400 | C-39 |
| MC74HC132N | C-23 |
| MC74HC14N | C-23 |
| MC74HC174N | C-26 |
| MC74HC4051N | C-30 |
| MC74HC4052N | C-30 |
| MC74HC4053N | C-30 |
| MC74HC540N | C-28 |
| MC74HC541N | C-28 |
| MC74HC74N | C-23 |
| MP4001 | C-39 |
| MP4504 | C-39 |
| MP6901 | C-40 |
| MSL915RS | C-40 |
| MSL9510RS | C-40 |
| MSM4094RS | C-22 |
| NJM2082S | C-40 |
| NJM4560S | C-40 |
| NJM78 ? ? A | C-45 |
| PALC16L8Q-25CN | C-34 |
| PALC22V10H-25CNS | C-34 |
| PG4553KY | C-3 |
| PH110 | C-3 |
| PY4553K | C-3 |
| RC4556S | C-40 |
| RC4558DQ | C-40 |
| RC4560D | C-41 |
| RC78L ? ? A | C-44 |
| RC79L ? ? A | C-45 |
| RD ? ? ESB ? | C-3 |
| RD ? ? MB ? | C-3 |
| SE310 | C-3 |
| SLP655B | C-3 |
| SN74120N | C-18 |
| SN74AS534N | C-19 |
| SN74HC191N | C-26 |
| SN74HC393N | C-28 |
| SN74HCT541N | C-28 |
| SN74LS06N | C-17 |
| SN74LS112AN | C-17 |
| SN74LS123N | C-18 |
| SN74LS138N | C-18 |
| SN74LS139N | C-18 |
| SN74LS189AN | C-19 |
| SN74LS221N | C-19 |
| SN74LS290N | C-19 |
| SN74LS624N | C-20 |
| SN75157P | C-18 |
| TC4071BP | C-21 |
| TC4538BP | C-22 |
| TC504013BP | C-20 |
| TC74HC00P | C-22 |
| TC74HC02P | C-22 |
| TC74HC04P | C-22 |
| TC74HC08P | C-22 |
| TC74HC10P | C-22 |
| TC74HC11P | C-23 |
| TC74HC138F | C-24 |
| TC74HC138P | C-24 |
| TC74HC139P | C-24 |
| TC74HC14P | C-23 |
| TC74HC151P | C-24 |
| TC74HC153P | C-24 |
| TC74HC157P | C-24 |

TYPE PAGE

TC74HC161P ········ C-25
TC74HC162P ········ C-25
TC74HC163P ········ C-25
TC74HC165P ········ C-25
TC74HC174P ········ C-26

TC74HC175P ········ C-26
TC74HC221P ········ C-26
TC74HC240P ········ C-26
TC74HC244P ········ C-26
TC74HC245P ········ C-27

TC74HC257P ········ C-27
TC74HC273F········· C-27
TC74HC32P·········· C-23
TC74HC367P ········ C-27
TC74HC368P ········ C-27

TC74HC373P ········ C-27
TC74HC374P ········ C-28
TC74HC4040P ······· C-30
TC74HC4051AP ····· C-30
TC74HC423P ········ C-28

TC74HC4520P ······· C-31
TC74HC4538P ······· C-31
TC74HC541F········· C-28
TC74HC541P ········ C-28
TC74HC564F········· C-29

TC74HC573P ········ C-29
TC74HC574P ········ C-29
TC74HC595P ········ C-29
TC74HC74P·········· C-23
TC74HC75P·········· C-23

TC74HC86P·········· C-23
TL082CP············· C-41
TL431CLP············ C-44
TL431CLPB ·········· C-44
TL494CN············· C-44

TL607CP············· C-41
TLY211 ·············· C-3
uPC1663C············ C-41
uPC311C ············· C-41
uPC319C ············· C-41

uPC339C ············· C-41
uPC358C ············· C-41
uPC393C ············· C-39
uPC4082C············ C-41
uPC4084C············ C-41

uPC4558C············ C-40
uPC648C ············· C-36
uPC649C ············· C-41
uPC78L ? ?········· C-44
uPC78N ? ?H ······ C-45

uPC79N ? ?H ······ C-45
uPD7004C ··········· C-35
uPD70320L-8 ········ C-42
uPD7201AC·········· C-43
uPD78C10G·········· C-34

TYPE PAGE

VFC62BM ············ C-44
X2212P ·············· C-31

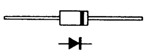

10E-2
1SS119
1SS148
ERA84-009

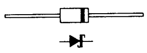

1SS106
1SS198
1SS97-1
ERA81-004
ERA81-005

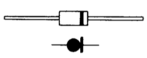

10YD ? ?

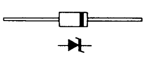

EQA02- ? ? ?
RD ? ? ESB ?

*TOP VIEW (SCALE 4/1)*

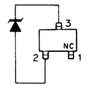

RD ? ? MB ?

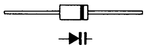

1SV134

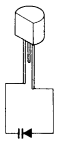

FC54M

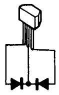

DAN209S

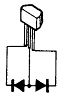

DAP209S

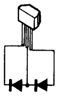

DA210S

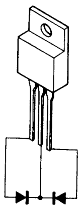

ESAC25-02C
ESAC25-04C

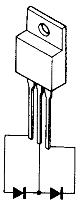

ESAC25-02D

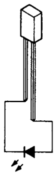

AA4553K ; ORANGE
BR4553K ; RED
PG4553KY ; GREEN
PY4553K ; YELLOW

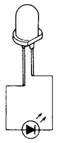

EAA5504S ; AMBER
EBG5504S ; GREEN
EBR5504S ; RED

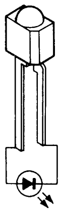

SE310 ; INFRARED

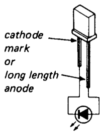
cathode mark or long length anode

SLP655B ; ORANGE

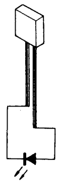

TLY211 ; YELLOW

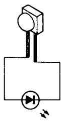

LN25RP ; RED
LN35BP ; GREEN

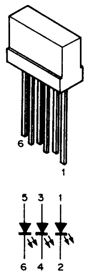

LT9101D ; RED
LT9101N ; YELLOW GREEN

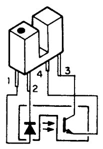

GP-1S05

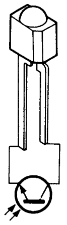

PH110

## TRANSISTOR

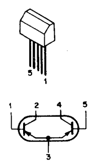

2SA979

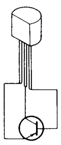

2SA1005-L
2SA952

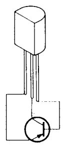

2SA1013
2SB739

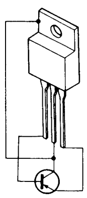

2SA1077

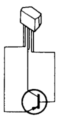

2SA1115

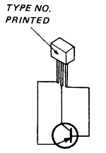
TYPE NO.
PRINTED

2SA1175

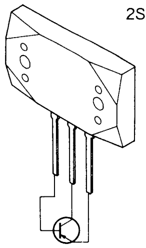

2SA1493

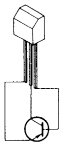

2SB733

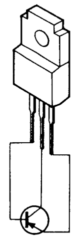

2SB1016

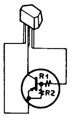

DTA114ES (R1 = 10K, R2 = 10K)
DTA114TS (R1 = 10K, R2 = ∞)
DTA124ES (R1 = 22K, R2 = 22K)

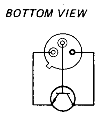
BOTTOM VIEW

2SC1252

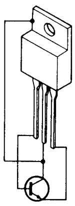

2SC1826
2SC1986
2SD1134

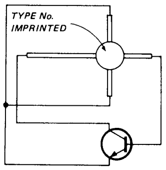
TYPE No.
IMPRINTED

2SC2369

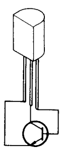

2SC2383
2SD788
2SD789

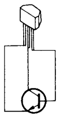

2SC2458
2SC2603
2SC2724
2SC3327

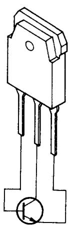

2SC2837

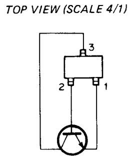
TOP VIEW (SCALE 4/1)
3
2
1

2SC3356

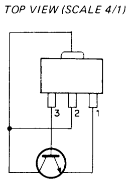
TOP VIEW (SCALE 4/1)
3
2
1

2SC3357

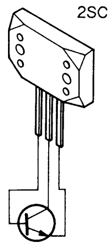

2SC3857

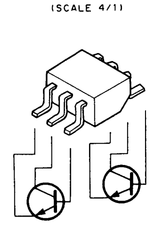

2SC4071
2SC4072-TH

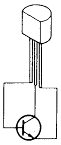

2SD734

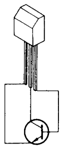

2SD774-4

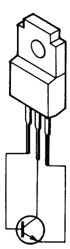

2SD1407
2SD1408

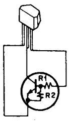

DTC114ES (R1 = 10K, R2 = 10K)
DTC124ES (R1 = 22K, R2 = 22K)
DTC144ES (R1 = 47K, R2 = 47K)

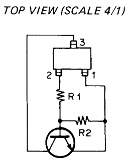
TOP VIEW (SCALE 4/1)
3
2
1
R1
R2

DTC124EK (R1 = 22K, R2 = 22K)

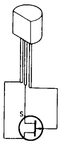

2SK523

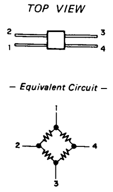
TOP VIEW
2
1
3
4
– Equivalent Circuit –
1
2
4
3

DM208

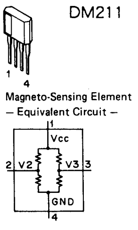
1
4
Magneto-Sensing Element
– Equivalent Circuit –
1
Vcc
2
V2
V3
3
GND
4

DM211

BX1225 (SONY)

## BIAS/ERASE AMPLIFIER

– SIDE VIEW –

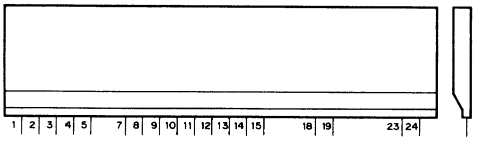
1
2
3
4
5
7
8
9
10
11
12
13
14
15
18
19
23
24

PIN-1 ; VREF IN
PIN-2 ; IN1
PIN-3 ; VCC1 (+5V)
PIN-4 ; OUT 1
PIN-5 ; CX1 (INTEGRATION CAP.)
PIN-7 ; CX2 (INTEGRATION CAP.)
PIN-8 ; CONT (DC CONTROL) IN
PIN-9 ; OUT2
PIN-10 ; IN2
PIN-11 ; PULSE IN
PIN-12 ; OUT 3
PIN-13 ; GND
PIN-14 ; IN3
PIN-15 ; VEE (-12V)
PIN-18 ; OUT4
PIN-19 ; MUTE IN
PIN-23 ; Vcc2 (+12V)
PIN-24 ; Vcc2 (+12V)

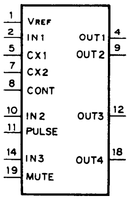
1
VREF
2
IN1
5
CX1
7
CX2
8
CONT
10
IN2
11
PULSE
14
IN3
19
MUTE
OUT1
4
OUT2
9
OUT3
12
OUT4
18

CX7907A (SONY)

## C-MOS TIME CODE GENERATOR

– TOP VIEW –

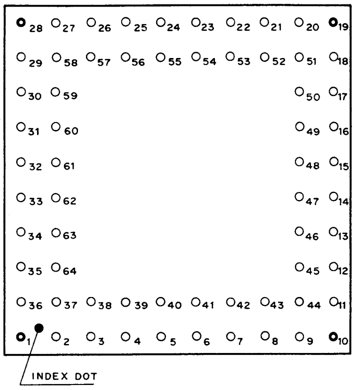
28 27 26 25 24 23 22 21 20 19
29 58 57 56 55 54 53 52 51 18
30 59 50 17
31 60 49 16
32 61 48 15
33 62 47 14
34 63 46 13
35 64 45 12
36 37 38 39 40 41 42 43 44 11
1 2 3 4 5 6 7 8 9 10
INDEX DOT

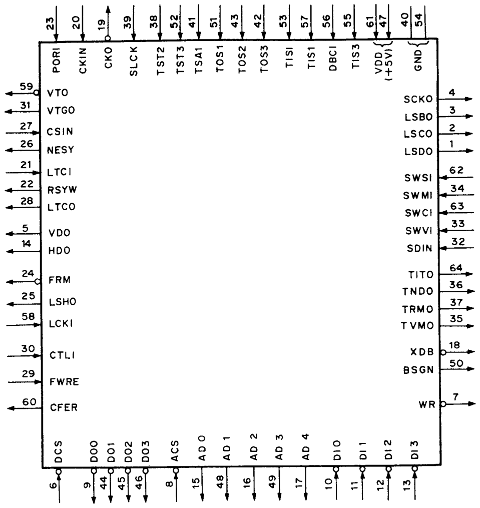
23 PORI
20 CKIN
19 CKO
39 SLCK
38 TST2
52 TST3
41 TSA1
51 TOS1
43 TOS2
42 TOS3
53 TISI
57 TIS1
56 DBCI
55 TIS3
61 47 VDD (+5V)
40 54 GND
59 VTO
31 VTGO
27 CSIN
26 NESY
21 LTCI
22 RSYW
28 LTCO
5 VDO
14 HDO
24 FRM
25 LSHO
58 LCKI
30 CTLI
29 FWRE
60 CFER
SCKO 4
LSBO 3
LSCO 2
LSDO 1
SWSI 62
SWMI 34
SWCI 63
SWVI 33
SDIN 32
TITO 64
TNDO 36
TRMO 37
TVMO 35
XDB 18
BSGN 50
WR 7
DCS 6
DO0 9
DO1 44
DO2 45
DO3 46
ACS 8
AD0 15
AD1 48
AD2 16
AD3 49
AD4 17
DI0 10
DI1 11
DI2 12
DI3 13

**PIN ASSIGNMENT**

| Pin No. | IN | OUT | SYMBOL | Pin No. | IN | OUT | SYMBOL | Pin No. | IN | OUT | SYMBOL | Pin No. | IN | OUT | SYMBOL |
|---|---|---|---|---|---|---|---|---|---|---|---|---|---|---|---|
| 1 |  | o | LSDO | 17 |  | o | AD4 | 33 | o |  | SWVI | 49 |  | o | AD3 |
| 2 |  | o | LSCO | 18 |  | o | XDB | 34 | o |  | SWMI | 50 |  | o | BSGN |
| 3 |  | o | LSBO | 19 |  | o | CKO | 35 |  | o | TVMO | 51 | o |  | TOS1 |
| 4 |  | o | SCKO | 20 | o |  | CKIN | 36 |  | o | TNDO | 52 | o |  | TST3 |
| 5 |  | o | VDO | 21 | o |  | LTCI | 37 |  | o | TRMO | 53 | o |  | TISI |
| 6 | o |  | DCS | 22 |  | o | RSYW | 38 | o |  | TST2 | 54 |  | o | GND |
| 7 |  | o | WR | 23 | o |  | PORI | 39 | o |  | SLCK | 55 | o |  | TIS3 |
| 8 | o |  | ACS | 24 |  | o | FRM | 40 |  | o | GND | 56 | o |  | DBCI |
| 9 |  | o | DO0 | 25 |  | o | LSHO | 41 | o |  | TSAI | 57 | o |  | TIS1 |
| 10 | o |  | DI0 | 26 |  | o | NESY | 42 | o |  | TOS3 | 58 | o |  | LCKI |
| 11 | o |  | DI1 | 27 | o |  | CSIN | 43 | o |  | TOS2 | 59 |  | o | VTO |
| 12 | o |  | DI2 | 28 |  | o | LTCO | 44 |  | o | DO1 | 60 |  | o | CFER |
| 13 | o |  | DI3 | 29 | o |  | FWRE | 45 |  | o | DO2 | 61 | o |  | VDD (+5V) |
| 14 |  | o | HDO | 30 | o |  | CTLI | 46 |  | o | DO3 | 62 | o |  | SWSI |
| 15 |  | o | AD0 | 31 |  | o | VTGO | 47 | o |  | VDD (+5V) | 63 | o |  | SWCI |
| 16 |  | o | AD2 | 32 | o |  | SDIN | 48 |  | o | AD1 | 64 |  | o | TITO |

## BLOCK DIAGRAM

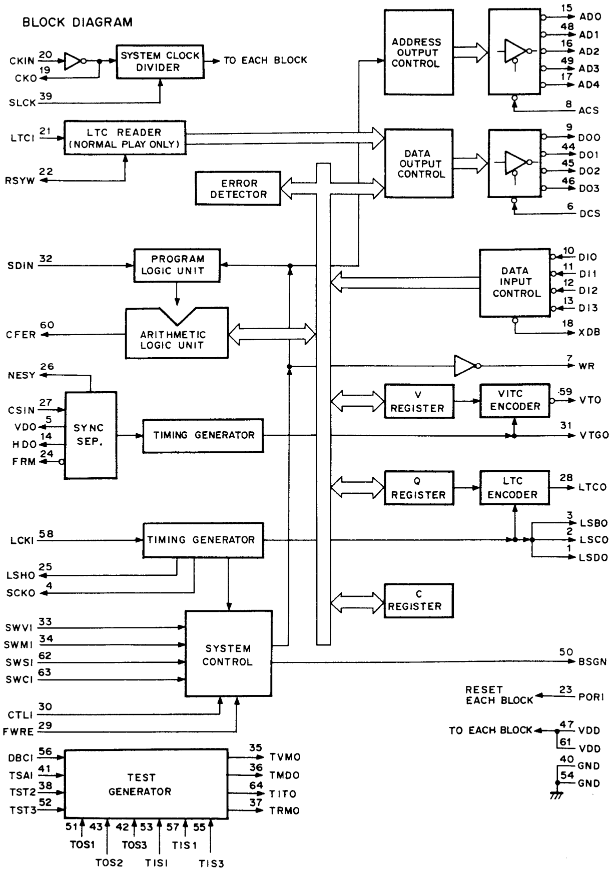
CKIN 20
19 CKO
SLCK 39
SYSTEM CLOCK DIVIDER
TO EACH BLOCK
LTCI 21
LTC READER (NORMAL PLAY ONLY)
RSYW 22
ERROR DETECTOR
SDIN 32
PROGRAM LOGIC UNIT
CFER 60
ARITHMETIC LOGIC UNIT
NESY 26
CSIN 27
VDO 5
HDO 14
FRM 24
SYNC SEP.
TIMING GENERATOR
LCKI 58
TIMING GENERATOR
LSHO 25
SCKO 4
SWVI 33
SWMI 34
SWSI 62
SWCI 63
SYSTEM CONTROL
CTLI 30
FWRE 29
DBCI 56
TSAI 41
TST2 38
TST3 52
TEST GENERATOR
35 TVMO
36 TMDO
64 TITO
37 TRMO
51 TOS1
43 TOS2
42 TOS3
53 TISI
57 TIS1
55 TIS3
ADDRESS OUTPUT CONTROL
15 AD0
48 AD1
16 AD2
49 AD3
17 AD4
8 ACS
DATA OUTPUT CONTROL
9 DO0
44 DO1
45 DO2
46 DO3
6 DCS
DATA INPUT CONTROL
10 DI0
11 DI1
12 DI2
13 DI3
18 XDB
7 WR
V REGISTER
VITC ENCODER
59 VTO
31 VTGO
Q REGISTER
LTC ENCODER
28 LTCO
3 LSBO
2 LSCO
1 LSDO
C REGISTER
50 BSGN
RESET EACH BLOCK
23 PORI
TO EACH BLOCK
47 VDD
61 VDD
40 GND
54 GND

**FUNCTIONAL PIN DEFINITION**

| Pin No. | SYMBOL | DESCRIPTION |
|---|---|---|
| 8 | ACS | ADDRESS LINE CHIP SELECT INPUT |
| 15 | AD0 | ADDRESS DATA OUTPUT |
| 48 | AD1 | |
| 16 | AD2 | |
| 49 | AD3 | |
| 17 | AD4 | |
| 50 | BSGN | BUSY GENERATOR OUTPUT |
| 60 | CFER | COLOR FRAME ERROR FLAG OUTPUT |
| 20 | CKIN | SYSTEM CLOCK INPUT |
| 19 | CKO | CLOCK OUTPUT |
| 27 | CSIN | COMPOSITE SYNC INPUT |
| 30 | CTLI | CTL(TIMER) SIGNAL INPUT (↓) |
| 6 | DCS | DATA LINE CHIP SELECT INPUT (NEGATIVE-LOGIC) |
| 10 | DI0 | DATA BUS INPUT (NEGATIVE-LOGIC) |
| 11 | DI1 | |
| 12 | DI2 | |
| 13 | DI3 | |
| 9 | DO0 | DATA BUS OUTPUT (NEGATIVE-LOGIC) |
| 44 | DO1 | |
| 45 | DO2 | |
| 46 | DO3 | |
| 24 | FRM | FRAME SIGNAL OUTPUT (NEGATIVE-LOGIC) |
| 29 | FWRE | CTL DIRECTION INPUT |
| 14 | HDO | HORIZONTAL SYNC DRIVE OUTPUT |
| 58 | LCKI | LTC CLOCK INPUT (SMPTE 9.6kHz/EBU 8kHz) |
| 3 | LSBO | LTC SYNCHRONOUS SIGNAL B OUTPUT |
| 2 | LSCO | LTC SYNCHRONOUS SIGNAL C OUTPUT |
| 1 | LSDO | LTC SYNCHRONOUS SIGNAL D OUTPUT |
| 25 | LSHO | LTC SYNCHRONOUS SIGNAL H OUTPUT |
| 21 | LTCI | LTC INPUT |
| 28 | LTCO | LTC SIGNAL OUTPUT |
| 26 | NESY | LOST-SYNC FLAG OUTPUT |
| 23 | PORI | POWER ON RESET INPUT |
| 22 | RSYW | READ SYNC WORD OUTPUT |
| 4 | SCKO | SWITCHES SIGNAL IN CLOCK OUTPUT |
| 32 | SDIN | SERIAL DATA INPUT |
| 39 | SLCK | SELECT CLOCK INPUT |
| 63 | SWCI | SWITCHES SIGNAL C INPUT |
| 34 | SWMI | SWITCHES SIGNAL M INPUT |
| 62 | SWSI | SWITCHES SIGNAL S INPUT |
| 33 | SWVI | SWITCHES SIGNAL V INPUT |
| 5 | VDO | VERTICAL SYNC DRIVE OUTPUT |
| 31 | VTGO | VITC GATE SIGNAL OUTPUT |
| 59 | VTO | VITC SIGNAL OUTPUT (NEGATIVE-LOGIC) |
| 7 | WR | WRITE SIGNAL OUTPUT (NEGATIVE-LOGIC) |
| 18 | XDB | EXTERNAL DATA BUS IN FLAG OUTPUT (NEGATIVE-LOGIC) |
| 47 | VDD | POWER LINE (+5V) |
| 61 | VDD | |
| 40 | GND | GND LINE |
| 54 | GND | |
| 56 | DBCI | TEST INPUT (TO BE CONNECTED WITH GND) |
| 57 | TIS1 | |
| 55 | TIS3 | |
| 53 | TISI | |
| 51 | TOS1 | |
| 43 | TOS2 | |
| 42 | TOS3 | |
| 41 | TSAI | |
| 38 | TST2 | |
| 52 | TST3 | |
| 64 | TITO | TEST OUTPUT (TO BE LEFT OPEN) |
| 36 | TNDO | |
| 37 | TRMO | |
| 35 | TVMO | |

**#32 SDIN**

| LSDO | LSCO | LSBO | SDIN | FUNCTION |
|---|---|---|---|---|
| 0 | 0 | 0 | ↓ | INCREASE IN BIT 'FR or U1' |
| 0 | 0 | 1 | | INCREASE IN BIT 'FT or U2' |
| 0 | 1 | 0 | | INCREASE IN BIT 'SE or U3' |
| 0 | 1 | 1 | | INCREASE IN BIT 'ST or U4' |
| 1 | 0 | 0 | | INCREASE IN BIT 'MN or U5' |
| 1 | 0 | 1 | | INCREASE IN BIT 'MT or U6' |
| 1 | 1 | 0 | | INCREASE IN BIT 'HR or U7' |
| 1 | 1 | 1 | | INCREASE IN BIT 'HT or U8' |

NOTE;INFLUENCED BIT IS DECIDED BY FIRST 2 BITS OF SWCI.

**#33 SWVI**

| LSDO | LSCO | LSBO | SWVI | FUNCTION |
|---|---|---|---|---|
| 0 | 0 | 0 | SW1A† | VITC POSITION SELECT A |
| 0 | 0 | 1 | SW1B† | |
| 0 | 1 | 0 | SW1C† | |
| 0 | 1 | 1 | SW1D† | |
| 1 | 0 | 0 | SW2A† | VITC POSITION SELECT B |
| 1 | 0 | 1 | SW2B† | |
| 1 | 1 | 0 | SW2C† | |
| 1 | 1 | 1 | SW2D† | |

†;VITC POSITION SELECT

| SW1D<br>SW2D | SW1C<br>SW2C | SW1B<br>SW2B | SW1A<br>SW2A | INSERTION LINE | |
|---|---|---|---|---|---|
| | | | | NTSC | PAL,SECAM |
| 0 | 0 | 0 | 0 | LINE 25 | LINE 22,335 |
| 0 | 0 | 0 | 1 | 24 | 21,334 |
| 0 | 0 | 1 | 0 | 23 | 20,333 |
| 0 | 0 | 1 | 1 | 22 | 19,332 |
| 0 | 1 | 0 | 0 | 21 | 18,331 |
| 0 | 1 | 0 | 1 | 20 | 17,330 |
| 0 | 1 | 1 | 0 | 19 | 16,329 |
| 0 | 1 | 1 | 1 | 18 | 15,328 |
| 1 | 0 | 0 | 0 | 17 | 14,327 |
| 1 | 0 | 0 | 1 | 16 | 13,326 |
| 1 | 0 | 1 | 0 | 15 | 12,325 |
| 1 | 0 | 1 | 1 | 14 | 11,324 |
| 1 | 1 | 0 | 0 | 13 | 10,323 |
| 1 | 1 | 0 | 1 | 12 | 9,322 |
| 1 | 1 | 1 | 0 | 11 | 8,321 |
| 1 | 1 | 1 | 1 | 10 | 7,320 |

**#34 SWMI**

| LSDO | LSCO | LSBO | SWMI | FUNCTION |
|---|---|---|---|---|
| 0 | 0 | 0 | x | INSERT SWMI DATA INTO BIT 'AS1'(NEGATIVE-LOGIC) |
| 0 | 0 | 1 | x | INSERT SWMI DATA INTO BIT 'AS2'(NEGATIVE-LOGIC) |
| 0 | 1 | 0 | x | INSERT SWMI DATA INTO BIT 'AS3'(NEGATIVE-LOGIC) |
| 0 | 1 | 1 | x | INSERT SWMI DATA INTO BIT 'AS4'(NEGATIVE-LOGIC) |
| 1 | 0 | 0 | x | INSERT SWMI DATA INTO BIT 'AS5'(NEGATIVE-LOGIC) |
| 1 | 0 | 1 | x | INSERT SWMI DATA INTO BIT 'AS6'(NEGATIVE-LOGIC) |
| 1 | 1 | 0 | ↑ | COLOR FRAME LOCK IN FIELD 1 |
| 1 | 1 | 1 | 0 | COLOR FRAME OFF |
| 1 | 1 | 1 | 1 | COLOR FRAME ON |

X;DON'T CARE.

**#62 SWSI**

| LSDO | LSCO | LSBO | SWSI | FUNCTION |
|---|---|---|---|---|
| 0 | 0 | 0 | FBS1* | VITC FIELD MARK/ LTC PHASE CORRECTION POSITION SELECT |
| 0 | 0 | 1 | FBS2* | |
| 0 | 1 | 0 | FBS3* | |
| 0 | 1 | 1 | 0 | PHASE CORRECTION ON |
| 0 | 1 | 1 | 1 | PHASE CORRECTION OFF |
| 1 | 0 | 0 | S1** | SIGNAL FORMAT SELECT |
| 1 | 0 | 1 | S2** | |
| 1 | 1 | 0 | S4** | |
| 1 | 1 | 1 | x | - |

x;DON'T CARE.

*;VITC FIELD MARK/LTC PHASE CORRECTION POSITION SELECT

| FBS3 | FBS2 | FBS1 | FIELD MARK POSITION | LTC BIT No. |
|---|---|---|---|---|
| 0 | 0 | 0 | AS1 | 10 |
| 0 | 0 | 1 | AS2 | 11 |
| 0 | 1 | 0 | AS3 | 27 |
| 0 | 1 | 1 | AS4 | 43 |
| 1 | 0 | 0 | AS5 | 58 |
| 1 | 0 | 1 | AS6 | 59 |
| 1 | 1 | 0 | - | - |
| 1 | 1 | 1 | - | - |

NOTE;LTC PHASE CORRECTION BIT OF CX7907 IS FIXED ON BIT-63.

**;SIGNAL FORMAT SELECT

| S4 | S2 | S1 | FORMAT | FRAME |
|---|---|---|---|---|
| 0 | 0 | 0 | FILM | 24 |
| 0 | 0 | 1 | NOT ALLOWED | - |
| 0 | 1 | x | | |
| 1 | 0 | 0 | PAL,SECAM | 25 |
| 1 | 0 | 1 | NOT ALLOWED | - |
| 1 | 1 | 0 | NTSC NDF | 30 |
| 1 | 1 | 1 | NTSC DF | 30 |

DF;DROP FRAME
NDF;NON DROP FRAME
x;DON'T CARE.

0;LOW LEVEL
1;HIGH LEVEL

**#63 SWCI**

| LSDO | LSCO | LSBO | SWCI | FUNCTION | |
|---|---|---|---|---|---|
| 0 | 0 | 0 | 0 | U-BIT | IN/OUT DATA SELECT*1 |
| 0 | 0 | 0 | 1 | TIME | |
| 0 | 0 | 1 | 0 | CTL | |
| 0 | 0 | 1 | 1 | TIME/U-BIT | |
| 0 | 1 | 0 | x | - | |
| 0 | 1 | 1 | 0 | DATA RESET ON*2 | |
| 0 | 1 | 1 | 1 | DATA RESET OFF | |
| 1 | 0 | 0 | 0 | TIME DATA HOLD | |
| 1 | 0 | 0 | 1 | TIME DATA RUN | |
| 1 | 0 | 1 | ↓ | EXTERNAL DATA LOAD*2 | |
| 1 | 1 | 0 | 0 | EXTRAPOLATION ON | |
| 1 | 1 | 0 | 1 | EXTRAPOLATION OFF | |
| 1 | 1 | 1 | x | - | |

x; DON'T CARE.
*1;REFER TO TIMING CHART(DATA OUT).
*2;INFLUENCED DATA IS DECIDED BY FIRST 2 BITS OF SWCI.

**ERROR BYPASS ALGORITHM**

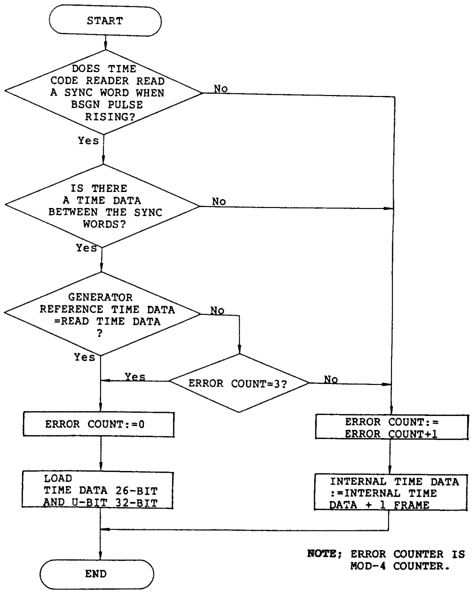
START
DOES TIME CODE READER READ A SYNC WORD WHEN BSGN PULSE RISING?
No
Yes
IS THERE A TIME DATA BETWEEN THE SYNC WORDS?
No
Yes
GENERATOR REFERENCE TIME DATA =READ TIME DATA ?
No
Yes
ERROR COUNT=3?
Yes
No
ERROR COUNT:=0
ERROR COUNT:= ERROR COUNT+1
LOAD TIME DATA 26-BIT AND U-BIT 32-BIT
INTERNAL TIME DATA :=INTERNAL TIME DATA + 1 FRAME
END

**NOTE;** ERROR COUNTER IS MOD-4 COUNTER.

## TIMING CHART

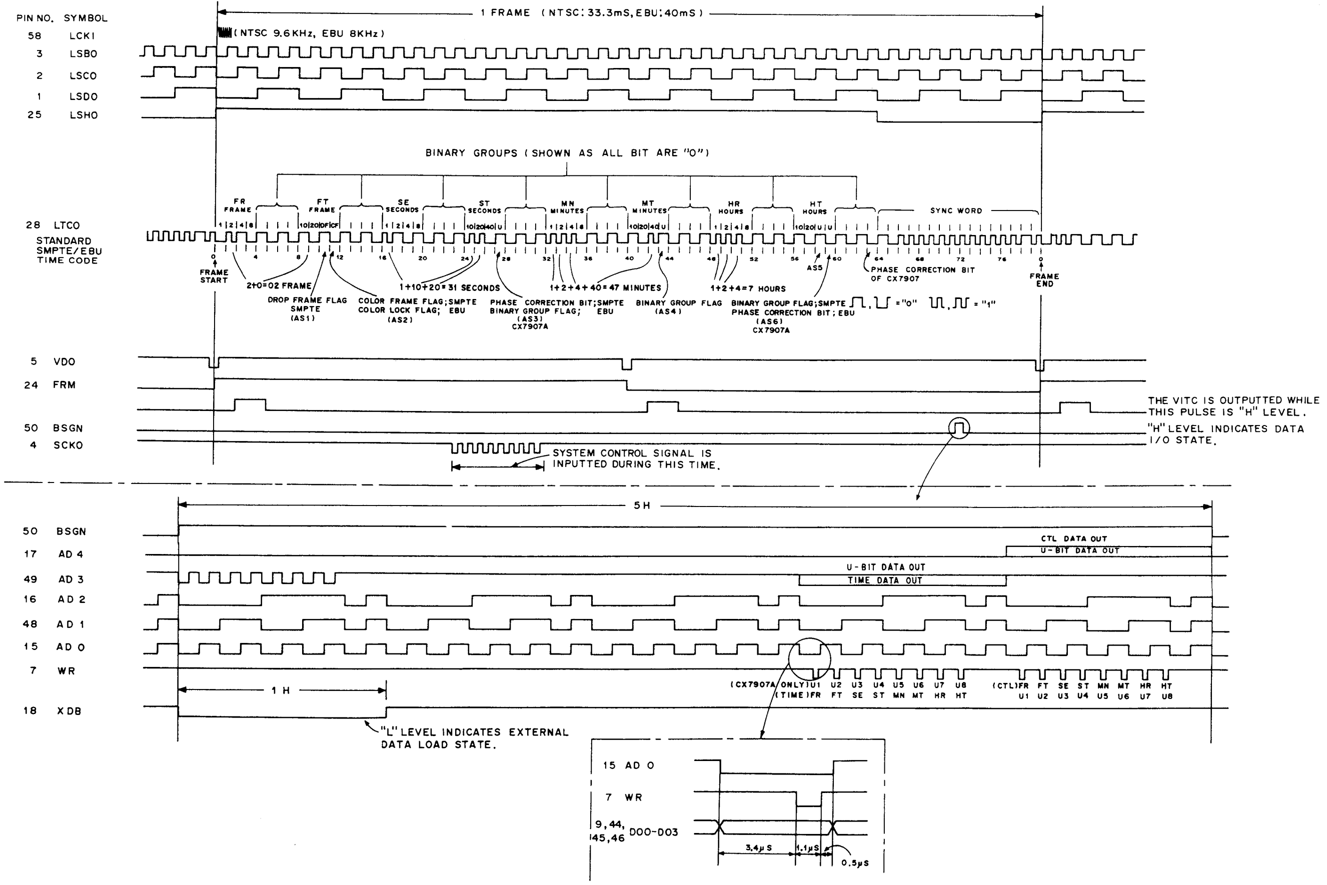
PIN NO. SYMBOL
58 LCKI
3 LSBO
2 LSCO
1 LSDO
25 LSHO
1 FRAME (NTSC: 33.3mS, EBU: 40mS)
(NTSC 9.6KHz, EBU 8KHz)
BINARY GROUPS (SHOWN AS ALL BIT ARE "0")
FR FRAME
FT FRAME
SE SECONDS
ST SECONDS
MN MINUTES
MT MINUTES
HR HOURS
HT HOURS
SYNC WORD
28 LTCO
STANDARD SMPTE/EBU TIME CODE
FRAME START
FRAME END
2+0=02 FRAME
1+10+20=31 SECONDS
1+2+4+40=47 MINUTES
1+2+4=7 HOURS
DROP FRAME FLAG SMPTE (AS1)
COLOR FRAME FLAG; SMPTE COLOR LOCK FLAG; EBU (AS2)
PHASE CORRECTION BIT; SMPTE BINARY GROUP FLAG; EBU (AS3) CX7907A
BINARY GROUP FLAG (AS4)
AS5
BINARY GROUP FLAG; SMPTE PHASE CORRECTION BIT; EBU (AS6) CX7907A
PHASE CORRECTION BIT OF CX7907
= "0"
= "1"
5 VDO
24 FRM
50 BSGN
4 SCKO
THE VITC IS OUTPUTTED WHILE THIS PULSE IS "H" LEVEL.
"H" LEVEL INDICATES DATA I/O STATE.
SYSTEM CONTROL SIGNAL IS INPUTTED DURING THIS TIME.
5H
50 BSGN
17 AD 4
49 AD 3
16 AD 2
48 AD 1
15 AD 0
7 WR
18 XDB
CTL DATA OUT
U-BIT DATA OUT
U-BIT DATA OUT
TIME DATA OUT
1 H
(CX7907A ONLY) U1 U2 U3 U4 U5 U6 U7 U8
(TIME) FR FT SE ST MN MT HR HT
(CTL) FR FT SE ST MN MT HR HT
U1 U2 U3 U4 U5 U6 U7 U8
"L" LEVEL INDICATES EXTERNAL DATA LOAD STATE.
15 AD 0
7 WR
9, 44, 45, 46 DO0-DO3
3.4μS
1.1μS
0.5μS

## CX7912A (SONY)

## C-MOS TIME CODE READER

- TOP VIEW -

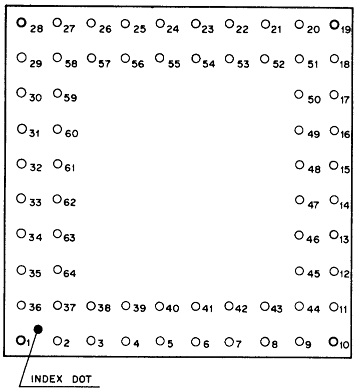
28 27 26 25 24 23 22 21 20 19
29 58 57 56 55 54 53 52 51 18
30 59 50 17
31 60 49 16
32 61 48 15
33 62 47 14
34 63 46 13
35 64 45 12
36 37 38 39 40 41 42 43 44 11
1 2 3 4 5 6 7 8 9 10
INDEX DOT

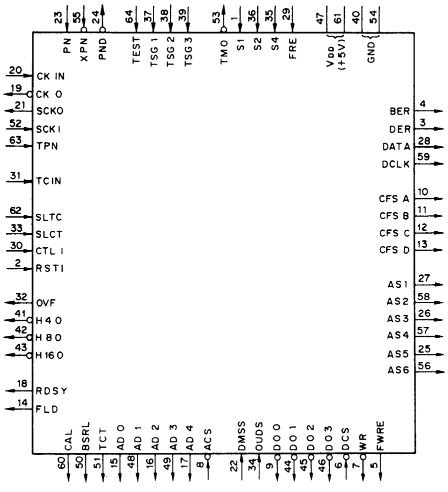
23 PN
55 XPN
24 PND
64 TEST
37 TSG 1
38 TSG 2
39 TSG 3
53 TMO
1 S1
36 S2
35 S4
29 FRE
47 VDD (+5V)
61
40 GND
54
20 CK IN
19 CK O
21 SCKO
52 SCKI
63 TPN
31 TCIN
62 SLTC
33 SLCT
30 CTL I
2 RSTI
32 OVF
41 H40
42 H80
43 H160
18 RDSY
14 FLD
4 BER
3 DER
28 DATA
59 DCLK
10 CFS A
11 CFS B
12 CFS C
13 CFS D
27 AS1
58 AS2
26 AS3
57 AS4
25 AS5
56 AS6
60 CAL
50 BSRL
51 TCT
15 AD 0
48 AD 1
16 AD 2
49 AD 3
17 AD 4
8 ACS
22 DMSS
34 OUDS
9 DO 0
44 DO 1
45 DO 2
46 DO 3
6 DCS
7 WR
5 FWRE

### PIN ASSIGNMENT

| PIN NO. | IN | OUT | SYMBOL | PIN NO. | IN | OUT | SYMBOL | PIN NO. | IN | OUT | SYMBOL | PIN NO. | IN | OUT | SYMBOL |
|---|---|---|---|---|---|---|---|---|---|---|---|---|---|---|---|
| 1 | ○ |  | S1 | 17 |  | ○ | AD 4 | 33 | ○ |  | SLCT | 49 |  | ○ | AD 3 |
| 2 | ○ |  | RSTI | 18 |  | ○ | RDSY | 34 | ○ |  | OUDS | 50 |  | ○ | BSRL |
| 3 |  | ○ | DER | 19 |  | ○ | CK O | 35 | ○ |  | S4 | 51 |  | ○ | TCT |
| 4 |  | ○ | BER | 20 | ○ |  | CK IN | 36 | ○ |  | S2 | 52 | ○ |  | SCKI |
| 5 |  | ○ | FWRE | 21 |  | ○ | SCKO | 37 | ○ |  | TSG 1 | 53 |  | ○ | TMO |
| 6 | ○ |  | DCS | 22 | ○ |  | DMSS | 38 | ○ |  | TSG 2 | 54 |  | ○ | GND |
| 7 |  | ○ | WR | 23 | ○ |  | PN | 39 | ○ |  | TSG 3 | 55 | ○ |  | XPN |
| 8 | ○ |  | ACS | 24 |  | ○ | PND | 40 |  | ○ | GND | 56 |  | ○ | AS6 |
| 9 |  | ○ | DO 0 | 25 |  | ○ | AS5 | 41 |  | ○ | H 40 | 57 |  | ○ | AS4 |
| 10 |  | ○ | CFS A | 26 |  | ○ | AS3 | 42 |  | ○ | H 80 | 58 |  | ○ | AS2 |
| 11 |  | ○ | CFS B | 27 |  | ○ | AS 1 | 43 |  | ○ | H 16 0 | 59 |  | ○ | DCLK |
| 12 |  | ○ | CFS C | 28 |  | ○ | DATA | 44 |  | ○ | DO 1 | 60 |  | ○ | CAL |
| 13 |  | ○ | CFS D | 29 | ○ |  | FRE | 45 |  | ○ | DO 2 | 61 | ○ |  | VDD(+5V) |
| 14 |  | ○ | FLD | 30 | ○ |  | CTL I | 46 |  | ○ | DO3 | 62 | ○ |  | SLTC |
| 15 |  | ○ | AD 0 | 31 | ○ |  | TC IN | 47 | ○ |  | VDD(+5V) | 63 | ○ |  | TPN |
| 16 |  | ○ | AD 2 | 32 |  | ○ | OVF | 48 |  | ○ | AD 1 | 64 | ○ |  | TEST |

### MODE SELECT

| SLCT | SLTC | MODE |
|---|---|---|
| 0 | 0 | AUTO |
| 0 | 1 | TIME CODE |
| 1 | 0 | CTL |
| 1 | 1 | AUTO |

### CTL COUNT

| FRE | RSTI | COUNT |
|---|---|---|
| 0 | X | DOWN COUNT |
| 1 | X | UP COUNT |
| X | ⏋ | RESET |

### SIGNAL FORMAT SELECT

| S4 | S2 | S1 | FORMAT | FRAME |
|---|---|---|---|---|
| 0 | 0 | 0 | FILM | 24 |
| 0 | 0 | 1 |  | — |
| 0 | 1 | 0 |  |  |
| 0 | 1 | 1 |  |  |
| 1 | 0 | 0 | PAL, SECAM | 25 |
| 1 | 0 | 1 | NOT ALLOWED | — |
| 1 | 1 | 0 | NTSC (NON DROP FRAME) | 30 |
| 1 | 1 | 1 | NTSC (DROP FRAME) | 30 |

0 ; LOW LEVEL
1 ; HIGH LEVEL
X ; DON'T CARE

## BLOCK DIAGRAM

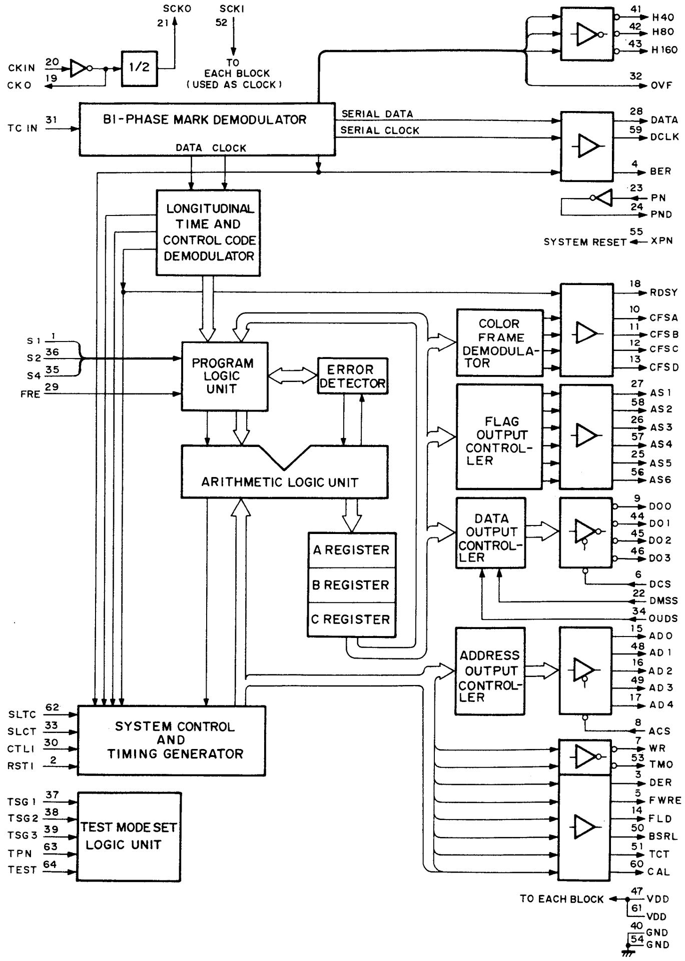
SCKO
21
SCKI
52
TO EACH BLOCK (USED AS CLOCK)
CKIN 20
CKO 19
1/2
TC IN 31
BI-PHASE MARK DEMODULATOR
SERIAL DATA
SERIAL CLOCK
DATA CLOCK
41 H40
42 H80
43 H160
32 OVF
28 DATA
59 DCLK
4 BER
23 PN
24 PND
SYSTEM RESET 55 XPN
LONGITUDINAL TIME AND CONTROL CODE DEMODULATOR
18 RDSY
S1 1
S2 36
S4 35
FRE 29
PROGRAM LOGIC UNIT
ERROR DETECTOR
COLOR FRAME DEMODULATOR
10 CFSA
11 CFSB
12 CFSC
13 CFSD
FLAG OUTPUT CONTROLLER
27 AS1
58 AS2
26 AS3
57 AS4
25 AS5
56 AS6
ARITHMETIC LOGIC UNIT
DATA OUTPUT CONTROLLER
9 DO0
44 DO1
45 DO2
46 DO3
A REGISTER
B REGISTER
C REGISTER
6 DCS
22 DMSS
34 OUDS
ADDRESS OUTPUT CONTROLLER
15 AD0
48 AD1
16 AD2
49 AD3
17 AD4
8 ACS
SLTC 62
SLCT 33
CTLI 30
RSTI 2
SYSTEM CONTROL AND TIMING GENERATOR
7 WR
53 TMO
3 DER
5 FWRE
14 FLD
50 BSRL
51 TCT
60 CAL
TSG1 37
TSG2 38
TSG3 39
TPN 63
TEST 64
TEST MODE SET LOGIC UNIT
TO EACH BLOCK 47 VDD
61 VDD
40 GND
54 GND

**FUNCTIONAL PIN DEFINITION**

| Pin No. | SYMBOL | DESCRIPTION |
|---|---|---|
| 8 | ACS | ADDRESS LINE OUTPUT ENABLE (NEGATIVE-LOGIC) |
| 15 | AD0 | ADDRESS DATA OUTPUT |
| 48 | AD1 | |
| 16 | AD2 | |
| 49 | AD3 | |
| 17 | AD4 | |
| 27 | AS1 | PARALLEL DATA OUTPUT |
| 58 | AS2 | |
| 26 | AS3 | |
| 57 | AS4 | |
| 25 | AS5 | |
| 56 | AS6 | |
| 4 | BER | BI-PHASE MARK ERROR (BIT ERROR) OUTPUT |
| 50 | BSRL | DATA OUT FLAG OUTPUT |
| 60 | CAL | CALCULATE OUT FLAG OUTPUT |
| 10 | CFSA | DEMODULATED COLOR FRAME OUTPUT |
| 11 | CFSB | |
| 12 | CFSC | |
| 13 | CFSD | |
| 20 | CKIN | CLOCK INPUT |
| 19 | CKO | CLOCK OUTPUT (NEGATIVE-LOGIC) |
| 30 | CTLI | CTL SIGNAL INPUT (↓) |
| 28 | DATA | DEMODULATED SERIAL DATA OUTPUT |
| 59 | DCLK | DEMODULATED CLOCK OUTPUT |
| 6 | DCS | DATA LINE OUTPUT ENABLE (NEGATIVE-LOGIC) |
| 3 | DER | DEMODULATE DATA ERROR OUTPUT |
| 22 | DMSS | ASSIGNED DATA SELECT |
| 9 | DO0 | DATA OUTPUT (NEGATIVE-LOGIC) |
| 44 | DO1 | |
| 45 | DO2 | |
| 46 | DO3 | |
| 14 | FLD | FIELD DATA OUTPUT |
| 29 | FRE | CTL DIRECTION SIGNAL INPUT |
| 5 | FWRE | DEMODULATE DIRECTION SIGNAL OUTPUT |
| 41 | H40 | SPEED RANGE FLAG 4 OUTPUT (NEGATIVE-LOGIC) |
| 42 | H80 | SPEED RANGE FLAG 8 OUTPUT (NEGATIVE-LOGIC) |
| 43 | H160 | SPEED RANGE FLAG 16 OUTPUT (NEGATIVE-LOGIC) |
| 34 | OUDS | ERROR BYPASS ON/OFF SELECT |
| 32 | OVF | OVERFLOW FLAG OUTPUT |
| 23 | PN | POWER ON SIGNAL INPUT |
| 24 | PND | POWER ON SIGNAL OUPUT (NEGATIVE-LOGIC) |
| 18 | RDSY | READ SYNC WORD DATA OUTPUT |
| 2 | RSTI | CTL TIMER RESET INPUT (↓) |
| 1 | S1 | SIGNAL FORMAT SELECT S1 |
| 36 | S2 | SIGNAL FORMAT SELECT S2 |
| 35 | S4 | SIGNAL FORMAT SELECT S4 |
| 52 | SCKI | SYSTEM CLOCK INPUT |
| 21 | SCKO | SYSTEM CLOCK OUTPUT |
| 33 | SLCT | SELECT CTL INPUT |
| 62 | SLTC | SELECT LTC INPUT |
| 55 | XPN | SYSTEM RESET SIGNAL INPUT (NEGATIVE-LOGIC) |
| 31 | TCIN | LONGITUDINAL TIME AND CONTROL CODE INPUT |
| 51 | TCT | INPUT SELECT FLAG OUTPUT |
| 53 | TMO | TIME OVER SIGNAL OUTPUT (NEGATIVE-LOGIC) |
| 7 | WR | WRITE SIGNAL OUTPUT (NEGATIVE-LOGIC) |
| 47 | VDD | POWER LINE (+5V) |
| 61 | VDD | |
| 40 | GND | GND LINE |
| 54 | GND | |
| 64 | TEST | TEST MODE SET INPUT (TO BE CONNECTED WITH GND) |
| 63 | TPN | |
| 37 | TSG1 | |
| 38 | TSG2 | |
| 39 | TSG3 | |

## TIMING CHART

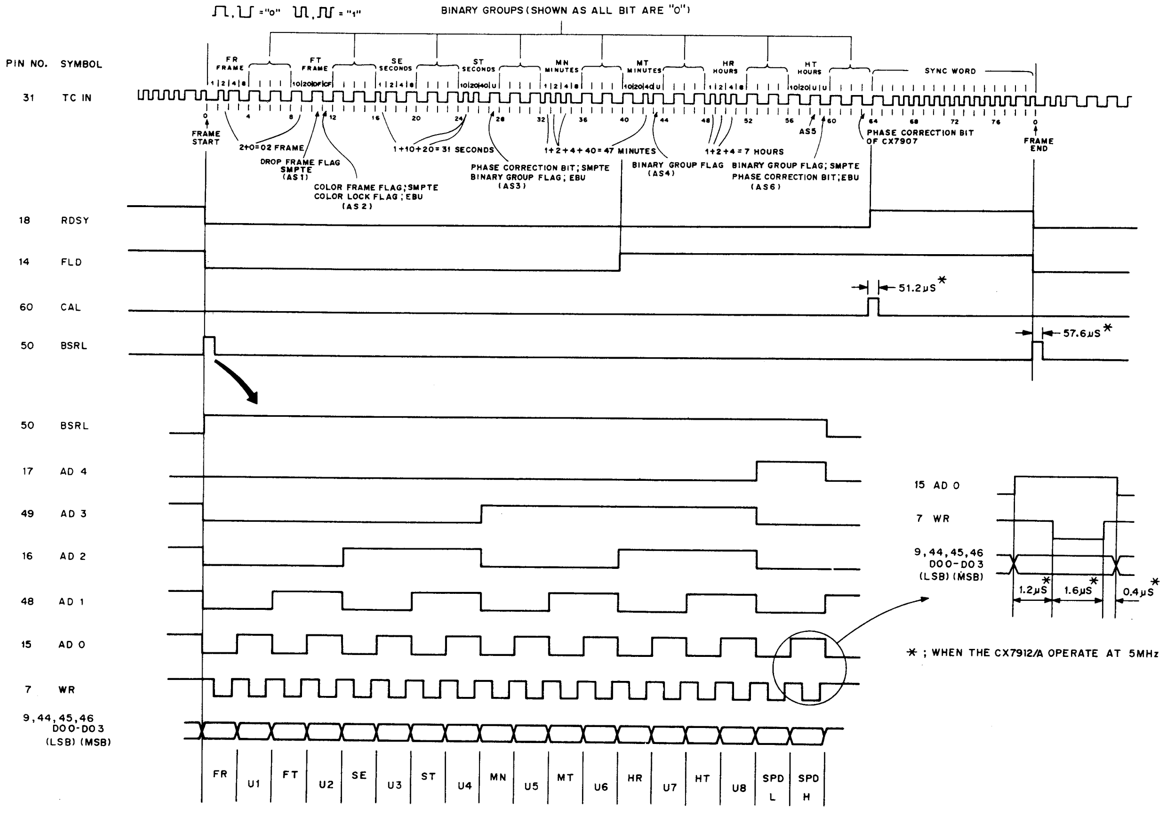
="0"
="1"
BINARY GROUPS (SHOWN AS ALL BIT ARE "0")
PIN NO. SYMBOL
FR FRAME
FT FRAME
SE SECONDS
ST SECONDS
MN MINUTES
MT MINUTES
HR HOURS
HT HOURS
SYNC WORD
31 TC IN
0
FRAME START
2+0=02 FRAME
DROP FRAME FLAG SMPTE (AS1)
COLOR FRAME FLAG; SMPTE COLOR LOCK FLAG; EBU (AS2)
1+10+20=31 SECONDS
PHASE CORRECTION BIT; SMPTE BINARY GROUP FLAG; EBU (AS3)
1+2+4+40=47 MINUTES
BINARY GROUP FLAG (AS4)
1+2+4=7 HOURS
BINARY GROUP FLAG; SMPTE PHASE CORRECTION BIT; EBU (AS6)
AS5
PHASE CORRECTION BIT OF CX7907
0
FRAME END
18 RDSY
14 FLD
60 CAL
51.2μS*
50 BSRL
57.6μS*
50 BSRL
17 AD 4
49 AD 3
16 AD 2
48 AD 1
15 AD 0
7 WR
9,44,45,46 DO0-DO3 (LSB) (MSB)
FR
U1
FT
U2
SE
U3
ST
U4
MN
U5
MT
U6
HR
U7
HT
U8
SPD L
SPD H
15 AD 0
7 WR
9,44,45,46 DO0-DO3 (LSB) (MSB)
1.2μS*
1.6μS*
0.4μS*

* ; WHEN THE CX7912/A OPERATE AT 5MHz

CX7913A (SONY)

C-MOS VITC (VERTICAL INTERVAL TIME CODE) READER
- TOP VIEW -

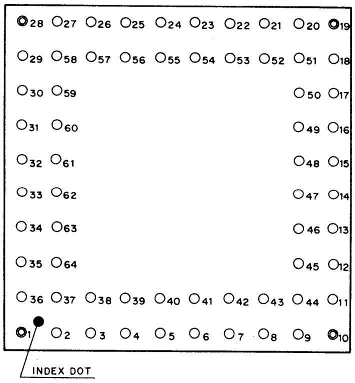
28 27 26 25 24 23 22 21 20 19
29 58 57 56 55 54 53 52 51 18
30 59 50 17
31 60 49 16
32 61 48 15
33 62 47 14
34 63 46 13
35 64 45 12
36 37 38 39 40 41 42 43 44 11
1 2 3 4 5 6 7 8 9 10
INDEX DOT

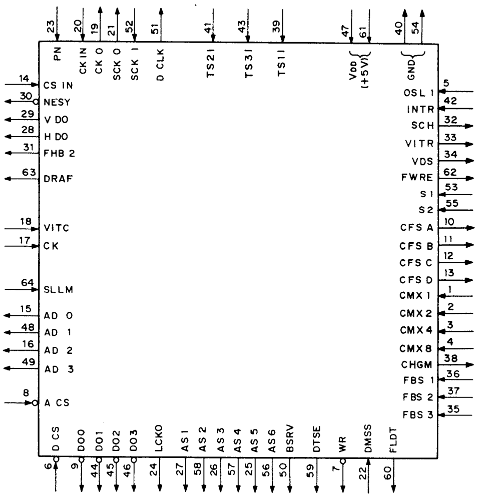
23 PN
20 CK IN
19 CK O
21 SCK O
52 SCK I
51 D CLK
41 TS2I
43 TS3I
39 TS1I
47 61 VDD (+5V)
40 54 GND
14 CS IN
30 NESY
29 V DO
28 H DO
31 FHB 2
63 DRAF
18 VITC
17 CK
64 SLLM
15 AD 0
48 AD 1
16 AD 2
49 AD 3
8 A CS
5 OSL 1
42 INTR
32 SCH
33 VITR
34 VDS
62 FWRE
53 S1
55 S2
10 CFS A
11 CFS B
12 CFS C
13 CFS D
1 CMX 1
2 CMX 2
3 CMX 4
4 CMX 8
38 CHGM
36 FBS 1
37 FBS 2
35 FBS 3
6 D CS
9 DO0
44 DO1
45 DO2
46 DO3
24 LCKO
27 AS 1
58 AS 2
26 AS 3
57 AS 4
25 AS 5
56 AS 6
50 BSRV
59 DTSE
7 WR
22 DMSS
60 FLDT

| PIN NO. | IN | OUT | SYMBOL | PIN NO. | IN | OUT | SYMBOL | PIN NO. | IN | OUT | SYMBOL | PIN NO. | IN | OUT | SYMBOL |
|---|---|---|---|---|---|---|---|---|---|---|---|---|---|---|---|
| 1 | ○ |  | CMX 1 | 17 | ○ |  | CK | 33 |  | ○ | VITR | 49 |  | ○ | AD 3 |
| 2 | ○ |  | CMX 2 | 18 | ○ |  | VITC | 34 |  | ○ | VDS | 50 |  | ○ | BSRV |
| 3 | ○ |  | CMX 4 | 19 |  | ○ | CK O | 35 | ○ |  | FBS 3 | 51 |  | ○ | D CLK |
| 4 | ○ |  | CMX 8 | 20 | ○ |  | CK IN | 36 | ○ |  | FBS 1 | 52 | ○ |  | SCK I |
| 5 | ○ |  | OSL 1 | 21 |  | ○ | SCK O | 37 | ○ |  | FBS 2 | 53 | ○ |  | S1 |
| 6 | ○ |  | D CS | 22 | ○ |  | DMSS | 38 |  | ○ | CHGM | 54 |  | ○ | GND |
| 7 |  | ○ | WR | 23 | ○ |  | PN | 39 | ○ |  | TS1I | 55 | ○ |  | S2 |
| 8 | ○ |  | A CS | 24 |  | ○ | LCKO | 40 |  | ○ | GND | 56 |  | ○ | AS6 |
| 9 |  | ○ | DO 0 | 25 |  | ○ | AS5 | 41 | ○ |  | TS2I | 57 |  | ○ | AS4 |
| 10 |  | ○ | CFS A | 26 |  | ○ | AS3 | 42 | ○ |  | INTR | 58 |  | ○ | AS2 |
| 11 |  | ○ | CFS B | 27 |  | ○ | AS1 | 43 | ○ |  | TS3I | 59 |  | ○ | DTSE |
| 12 |  | ○ | CFS C | 28 |  | ○ | HDO | 44 |  | ○ | DO 1 | 60 |  | ○ | FLDT |
| 13 |  | ○ | CFS D | 29 |  | ○ | VDO | 45 |  | ○ | DO 2 | 61 | ○ |  | VDD(+5V) |
| 14 | ○ |  | CS IN | 30 |  | ○ | NESY | 46 |  | ○ | DO 3 | 62 |  | ○ | FWRE |
| 15 |  | ○ | AD 0 | 31 |  | ○ | FHB 2 | 47 | ○ |  | VDD(+5V) | 63 |  | ○ | DRAF |
| 16 |  | ○ | AD 2 | 32 |  | ○ | SCH | 48 |  | ○ | AD 1 | 64 | ○ |  | SLLM |

## BLOCK DIAGRAM

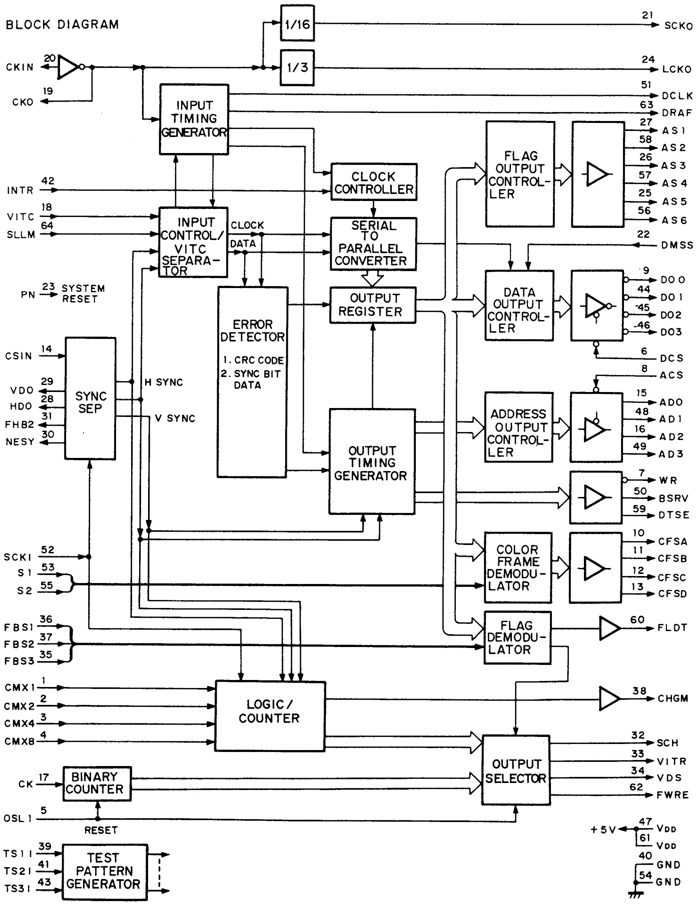
CKIN 20
CKO 19
1/16
1/3
21 SCKO
24 LCKO
51 DCLK
63 DRAF
27 AS1
58 AS2
26 AS3
57 AS4
25 AS5
56 AS6
22 DMSS
INPUT TIMING GENERATOR
CLOCK CONTROLLER
INTR 42
VITC 18
SLLM 64
INPUT CONTROL/ VITC SEPARATOR
CLOCK
DATA
SERIAL TO PARALLEL CONVERTER
PN 23 SYSTEM RESET
OUTPUT REGISTER
ERROR DETECTOR
1. CRC CODE
2. SYNC BIT DATA
FLAG OUTPUT CONTROLLER
DATA OUTPUT CONTROLLER
9 DO0
44 DO1
45 DO2
46 DO3
6 DCS
8 ACS
CSIN 14
VDO 29
HDO 28
FHB2 31
NESY 30
SYNC SEP
H SYNC
V SYNC
ADDRESS OUTPUT CONTROLLER
15 AD0
48 AD1
16 AD2
49 AD3
OUTPUT TIMING GENERATOR
7 WR
50 BSRV
59 DTSE
SCKI 52
S1 53
S2 55
COLOR FRAME DEMODULATOR
10 CFSA
11 CFSB
12 CFSC
13 CFSD
FBS1 36
FBS2 37
FBS3 35
FLAG DEMODULATOR
60 FLDT
CMX1 1
CMX2 2
CMX4 3
CMX8 4
LOGIC/ COUNTER
38 CHGM
OUTPUT SELECTOR
32 SCH
33 VITR
34 VDS
62 FWRE
CK 17
BINARY COUNTER
OSL1 5
RESET
TS11 39
TS21 41
TS31 43
TEST PATTERN GENERATOR
+5V 47 VDD
61 VDD
40 GND
54 GND

FUNCTIONAL PIN DEFINITION

| Pin No. | SYMBOL | DESCRIPTION |
|---|---|---|
| 8 | ACS | ADDRESS LINE ENABLE INPUT |
| 15 | AD0 | ADDRESS DATA OUTPUT |
| 48 | AD1 |  |
| 16 | AD2 |  |
| 49 | AD3 |  |
| 27 | AS1 | PARALLEL DATA OUTPUT |
| 58 | AS2 |  |
| 26 | AS3 |  |
| 57 | AS4 |  |
| 25 | AS5 |  |
| 56 | AS6 |  |
| 50 | BSRV | DATA OUT FLAG OUTPUT |
| 10 | CFSA | DEMODULATED COLOR FRAME OUTPUT |
| 11 | CFSB |  |
| 12 | CFSC |  |
| 13 | CFSD |  |
| 38 | CHGM | CHARACTER V POSITION GATE SIGNAL OUTPUT |
| 17 | CK | INTERNAL COUNTER CLOCK INPUT |
| 20 | CKIN | CLOCK INPUT |
| 19 | CKO | CLOCK OUTPUT (NEGATIVE-LOGIC) |
| 1 | CMX1 | CHARACTER V POSITION SELECT INPUT |
| 2 | CMX2 |  |
| 3 | CMX4 |  |
| 4 | CMX8 |  |
| 14 | CSIN | COMPOSITE SYNC INPUT |
| 51 | DCLK | VITC READ CLOCK OUTPUT |
| 6 | DCS | DATA LINE ENABLE INPUT |
| 22 | DMSS | ASSIGNED BIT DATA SELECT INPUT |
| 9 | DO0 | DATA OUT (NEGATIVE-LOGIC) |
| 44 | DO1 |  |
| 45 | DO2 |  |
| 46 | DO3 |  |
| 63 | DRAF | VITC SYNCHRONIZE SIGNAL D OUTPUT |
| 59 | DTSE | VITC DATA SEARCH FLAG OUTPUT |
| 36 | FBS1 | FIELD MARK POSITION SELECT 1 INPUT |
| 37 | FBS2 | FIELD MARK POSITION SELECT 2 INPUT |
| 35 | FBS3 | FIELD MARK POSITION SELECT 3 INPUT |
| 31 | FHB2 | FH/2 SIGNAL OUTPUT |
| 60 | FLDT | FIELD DATA OUTPUT |
| 62 | FWRE | TAPE DIRECTION SIGNAL OUTPUT |
| 28 | HDO | HORIZONTAL SYNC DRIVE OUTPUT |
| 42 | INTR | INTERRUPT REQUEST INPUT |
| 24 | LCKO | LTC CLOCK OUTPUT |
| 30 | NESY | LOST-SYNC FLAG OUTPUT |
| 5 | OSL1 | OUTPUT SIGNAL SELECT 1 INPUT |
| 23 | PN | POWER ON RESET INPUT |
| 53 | S1 | SIGNAL FORMAT SELECT S1 INPUT |
| 55 | S2 | SIGNAL FORMAT SELECT S2 INPUT |
| 32 | SCH | OUTPUT SIGNAL SCH |
| 52 | SCKI | SYSTEM CLOCK INPUT |
| 21 | SCKO | SYSTEM CLOCK OUTPUT |
| 64 | SLLM | READ SIZE SELECT INPUT |
| 29 | VDO | VERTICAL SYNC DRIVE OUTPUT |
| 34 | VDS | OUTPUT SIGNAL VDS |
| 18 | VITC | VITC SIGNAL INPUT |
| 33 | VITR | OUTPUT SIGNAL VITR |
| 7 | WR | WRITE SIGNAL OUTPUT (NEGATIVE-LOGIC) |
| 47 | VDD | POWER LINE (+5V) |
| 61 | VDD |  |
| 40 | GND | GND LINE |
| 54 | GND |  |
| 39 | TS1I | TEST INPUT |
| 41 | TS2I |  |
| 43 | TS3I |  |

**#1,2,3,4 CMX1 TO 8;CHARACTER V POSITION SELECT**

| CMX8 | CMX4 | CMX2 | CMX1 | INSERTION LINE (#38 CHGM IS H LEVEL) | |
|---|---|---|---|---|---|
| | | | | NTSC | PAL,SECAM |
| 0 | 0 | 0 | 0 | --- | --- |
| 0 | 0 | 0 | 1 | --- | 284-303<br>596-615 |
| 0 | 0 | 1 | 0 | --- | 264-283<br>576-595 |
| 0 | 0 | 1 | 1 | --- | 244-263<br>556-575 |
| 0 | 1 | 0 | 0 | 227-246 | 224-243<br>536-555 |
| 0 | 1 | 0 | 1 | 207-226 | 204-223<br>516-535 |
| 0 | 1 | 1 | 0 | 187-206 | 184-203<br>496-515 |
| 0 | 1 | 1 | 1 | 167-186 | 164-183<br>476-495 |
| 1 | 0 | 0 | 0 | 147-166 | 144-163<br>456-475 |
| 1 | 0 | 0 | 1 | 127-146 | 124-143<br>436-455 |
| 1 | 0 | 1 | 0 | 107-126 | 104-123<br>416-435 |
| 1 | 0 | 1 | 1 | 87-106 | 84-103<br>396-415 |
| 1 | 1 | 0 | 0 | 67- 86 | 64- 83<br>376-395 |
| 1 | 1 | 0 | 1 | 47- 66 | 44- 63<br>356-375 |
| 1 | 1 | 1 | 0 | 27- 46 | 24- 43<br>336-355 |
| 1 | 1 | 1 | 1 | --- | --- |

**#36,37,35 FBS1 TO FBS3;FIELD DATA SELECT**

| FBS3 | FBS2 | FBS1 | #60 FLDT OUTPUT |
|---|---|---|---|
| 0 | 0 | 0 | AS1 ( VITC BIT No.14 ) |
| 0 | 0 | 1 | AS2 ( VITC BIT No.15 ) |
| 0 | 1 | 0 | AS3 ( VITC BIT No.35 ) |
| 0 | 1 | 1 | AS4 ( VITC BIT No.55 ) |
| 1 | 0 | 0 | AS5 ( VITC BIT No.74 ) |
| 1 | 0 | 1 | AS6 ( VITC BIT No.75 ) |
| 1 | 1 | 0 | ------ |
| 1 | 1 | 1 | ------ |

**#53,55 S1,S2;SIGNAL FORMAT SELECT**

| S2 | S1 | #13 CFSD FORMAT |
|---|---|---|
| 0 | 0 | UNSPECIFIED |
| 0 | 1 | |
| 1 | 0 | NTSC NON DROP FRAME |
| 1 | 1 | NTSC DROP FRAME |

0;LOW LEVEL
1;HIGH LEVEL

TIMING CHART

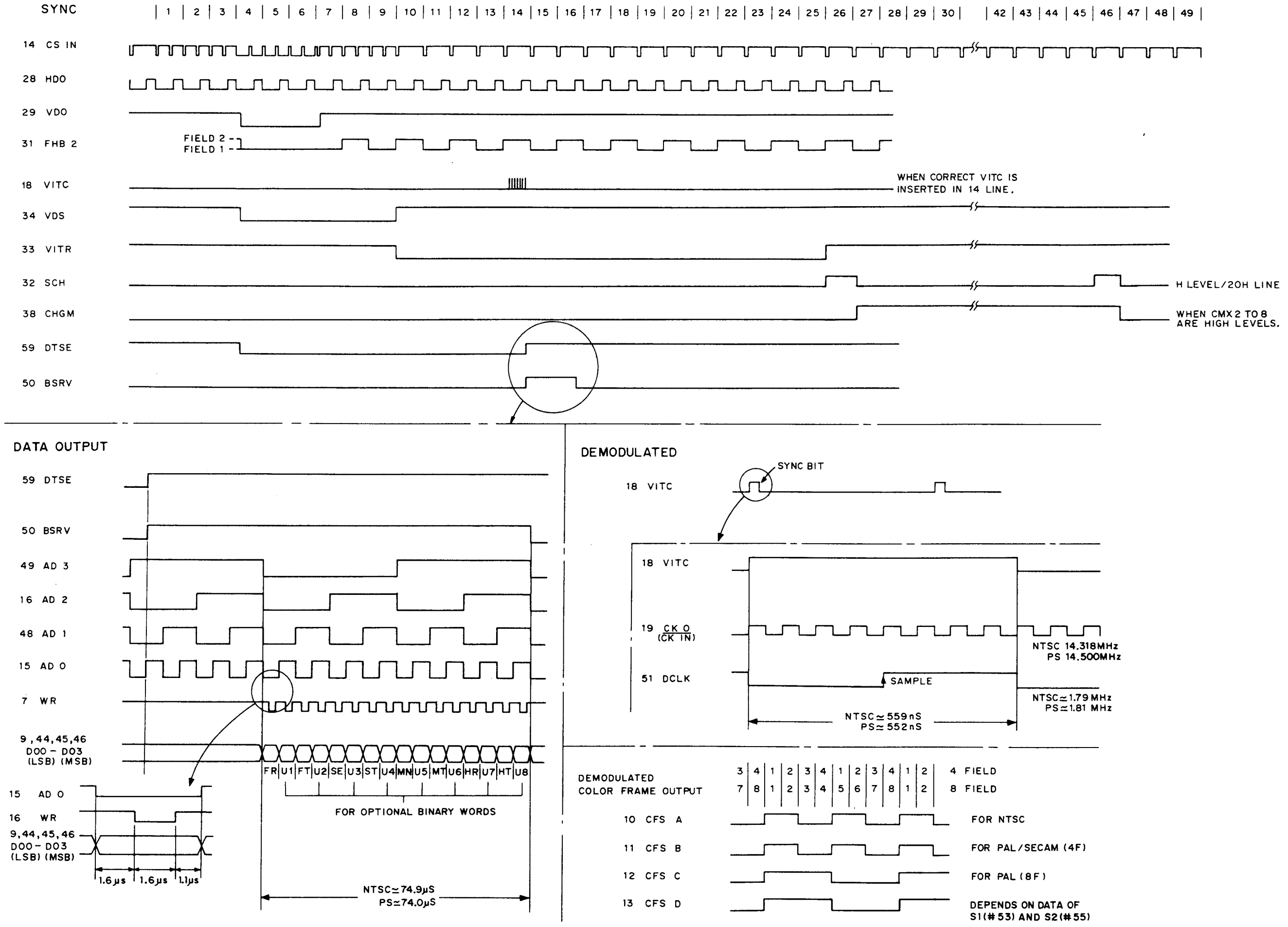
SYNC
1 2 3 4 5 6 7 8 9 10 11 12 13 14 15 16 17 18 19 20 21 22 23 24 25 26 27 28 29 30 42 43 44 45 46 47 48 49
14 CS IN
28 HDO
29 VDO
31 FHB 2
FIELD 2
FIELD 1
18 VITC
WHEN CORRECT VITC IS INSERTED IN 14 LINE.
34 VDS
33 VITR
32 SCH
H LEVEL/20H LINE
38 CHGM
WHEN CMX 2 TO 8 ARE HIGH LEVELS.
59 DTSE
50 BSRV
DATA OUTPUT
59 DTSE
50 BSRV
49 AD 3
16 AD 2
48 AD 1
15 AD 0
7 WR
9,44,45,46 DO0 - DO3 (LSB) (MSB)
FR U1 FT U2 SE U3 ST U4 MN U5 MT U6 HR U7 HT U8
FOR OPTIONAL BINARY WORDS
15 AD 0
16 WR
9,44,45,46 DO0 - DO3 (LSB) (MSB)
1.6μs
1.6μs
1.1μs
NTSC≃74.9μS
PS≃74.0μS
DEMODULATED
18 VITC
SYNC BIT
18 VITC
19 CK O (CK IN)
NTSC 14.318MHz
PS 14.500MHz
51 DCLK
SAMPLE
NTSC≃1.79 MHz
PS≃1.81 MHz
NTSC≃559nS
PS≃552nS
DEMODULATED COLOR FRAME OUTPUT
3 4 1 2 3 4 1 2 3 4 1 2
4 FIELD
7 8 1 2 3 4 5 6 7 8 1 2
8 FIELD
10 CFS A
FOR NTSC
11 CFS B
FOR PAL/SECAM (4F)
12 CFS C
FOR PAL (8F)
13 CFS D
DEPENDS ON DATA OF S1(#53) AND S2(#55)

CX23028 (SONY)

## C-MOS SYNCHRONOUS ROTATIONAL DIRECTION DETECTOR

- TOP VIEW -

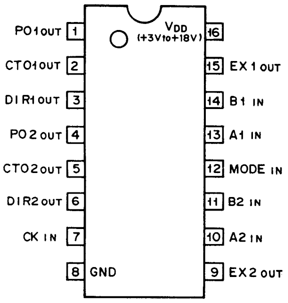
PO1 OUT 1
CTO1 OUT 2
DIR1 OUT 3
PO2 OUT 4
CTO2 OUT 5
DIR2 OUT 6
CK IN 7
8 GND
VDD (+3V to +18V) 16
15 EX1 OUT
14 B1 IN
13 A1 IN
12 MODE IN
11 B2 IN
10 A2 IN
9 EX2 OUT

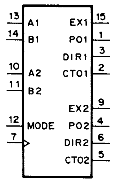
13 A1
14 B1
10 A2
11 B2
12 MODE
7
EX1 15
PO1 1
DIR1 3
CTO1 2
EX2 9
PO2 4
DIR2 6
CTO2 5

A,B ; SIGNAL INPUTS
EX ; A⊕B
PO ; A⊕B (SYNCHRONOUS)
DIR ; DIRECTION OUTPUT
CTO ; COUNT PULSE OUTPUT
MODE ; DIR1 & CTO1 MODE SELECT
⊕ ; EXCLUSIVE-OR

MODE="1"

DIRECTION OUTPUT "DIR"

| INPUTS | DIR |
|---|---|
| A∠B | 1 |
| B∠A | 0 |

TIMING CHART "CTO"

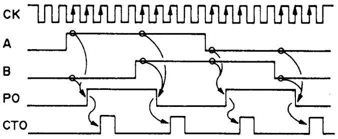

MODE="0"

DIRECTION OUTPUT "DIR"

| INPUTS | | DIR 1 | DIR 2 |
|---|---|---|---|
| CH1 | CH2 | | |
| A1∠B1 | A2∠B2 | 1 | THE SAME FUNCTION OF MODE "1" |
| B1∠A1 | A2∠B2 | OUTPUT "1" AND "0" ALTERNATELY | |
| A1∠B1 | B2∠A2 | | |
| B1∠A1 | B2∠A2 | 0 | |

CTO 1 ; CTO 1 with MODE "0" = CTO 1 with MODE "1" + CTO 2
CTO 2 ; THE SAME FUNCTION OF MODE "1"

1 ; HIGH LEVEL
0 ; LOW LEVEL
A∠B ; THE PHASE OF SIGNAL A IS IN ADVANCE FOR THE PHASE OF B.

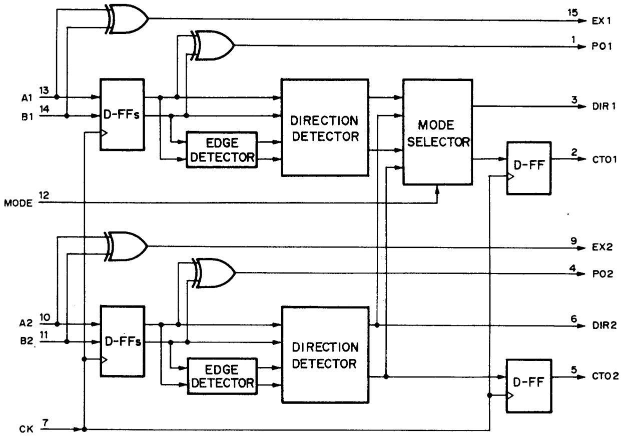
A1 13
B1 14
MODE 12
A2 10
B2 11
CK 7
D-FFs
EDGE DETECTOR
DIRECTION DETECTOR
MODE SELECTOR
D-FF
15 EX1
1 PO1
3 DIR1
2 CTO1
9 EX2
4 PO2
6 DIR2
5 CTO2

CX23065 (SONY)

## N-MOS PHASE COMPARATOR WITH INVERSION AMPLIFIER

- PRINTED SIDE VIEW -

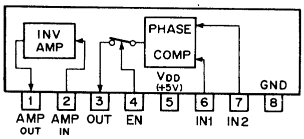
INV AMP
PHASE COMP
VDD (+5V)
GND
1 AMP OUT
2 AMP IN
3 OUT
4 EN
5
6 IN1
7 IN2
8

| EN | OUT |
|---|---|
| 1 | ACTIVE |
| 0 | HIGH IMPEDANCE |

1 ; HIGH LEVEL
0 ; LOW LEVEL

TIMING CHART

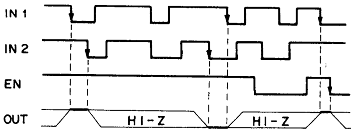

HI-Z ; HI-IMPEDANCE

CXA1194M (SONY) FLAT PACKAGE

## VIDEO DIFFERENTIAL AMPLIFIER

- TOP VIEW -

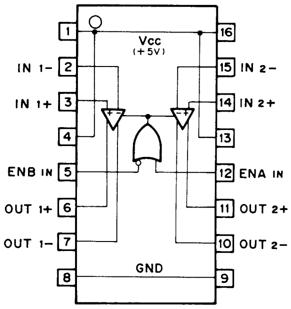
1
IN 1- 2
IN 1+ 3
4
ENB IN 5
OUT 1+ 6
OUT 1- 7
8
Vcc (+5V) 16
15 IN 2-
14 IN 2+
13
12 ENA IN
11 OUT 2+
10 OUT 2-
GND 9

| INPUTS | | OPERATION |
|---|---|---|
| ENA | ENB | |
| 0 | 0 | ENABLE |
| 0 | 1 | DISABLE |
| 1 | 0 | ENABLE |
| 1 | 1 | ENABLE |

0 ; LOW LEVEL
1 ; HIGH LEVEL

+OUTPUT IS IN PHASE WITH +INPUT.
-OUTPUT IS IN PHASE WITH -INPUT.

CXA1297P (SONY)

## OPERATIONAL AMPLIFIER

- TOP VIEW -

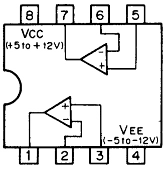
8 7 6 5
VCC (+5 to +12V)
VEE (-5 to -12V)
1 2 3 4

## CXD1095Q (SONY) FLAT PACKAGE

C-MOS I/O PORT EXPANDER
- TOP VIEW -

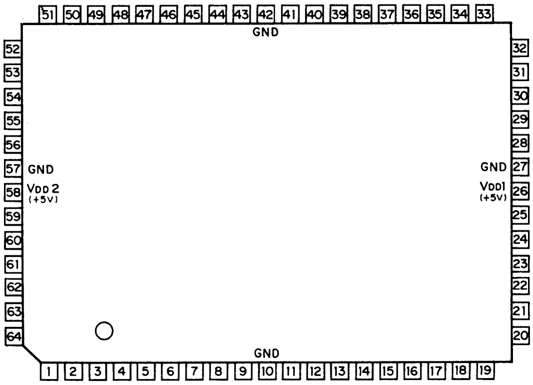
51 50 49 48 47 46 45 44 43 42 41 40 39 38 37 36 35 34 33
GND
52 53 54 55 56 57 58 59 60 61 62 63 64
GND
VDD 2 (+5V)
32 31 30 29 28 27 26 25 24 23 22 21 20
GND
VDD1 (+5V)
GND
1 2 3 4 5 6 7 8 9 10 11 12 13 14 15 16 17 18 19

| PIN NO. | IN | OUT | SYMBOL | PIN NO. | IN | OUT | SYMBOL | PIN NO. | IN | OUT | SYMBOL | PIN NO. | IN | OUT | SYMBOL |
|---|---|---|---|---|---|---|---|---|---|---|---|---|---|---|---|
| 1 | | | NC | 17 | ○ | ○ | PC6 | 33 | | | NC | 49 | ○ | ○ | PX0 |
| 2 | | | NC | 18 | ○ | ○ | PC7 | 34 | | | NC | 50 | ○ | ○ | PX1 |
| 3 | ○ | ○ | PB1 | 19 | | | NC | 35 | ○ | ○ | D3 | 51 | | | NC |
| 4 | ○ | ○ | PB2 | 20 | ○ | ○ | PD0 | 36 | ○ | ○ | D4 | 52 | ○ | ○ | PX2 |
| 5 | ○ | ○ | PB3 | 21 | ○ | ○ | PD1 | 37 | ○ | ○ | D5 | 53 | ○ | ○ | PX3 |
| 6 | ○ | ○ | PB4 | 22 | ○ | ○ | PD2 | 38 | ○ | ○ | D6 | 54 | ○ | ○ | PA0 |
| 7 | ○ | ○ | PB5 | 23 | ○ | ○ | PD3 | 39 | ○ | ○ | D7 | 55 | ○ | ○ | PA1 |
| 8 | ○ | ○ | PB6 | 24 | ○ | ○ | PD4 | 40 | ○ | | CLR | 56 | ○ | ○ | PA2 |
| 9 | ○ | ○ | PB7 | 25 | | | GND | 41 | ○ | | RST | 57 | | | GND |
| 10 | | | GND | 26 | ○ | | VDD (+5V) | 42 | | | GND | 58 | ○ | | VDD (+5V) |
| 11 | ○ | ○ | PC0 | 27 | ○ | ○ | PD5 | 43 | ○ | | WR | 59 | ○ | ○ | PA3 |
| 12 | ○ | ○ | PC1 | 28 | ○ | ○ | PD6 | 44 | ○ | | RD | 60 | ○ | ○ | PA4 |
| 13 | ○ | ○ | PC2 | 29 | ○ | ○ | PD7 | 45 | ○ | | CS | 61 | ○ | ○ | PA5 |
| 14 | ○ | ○ | PC3 | 30 | ○ | ○ | D0 | 46 | ○ | | A0 | 62 | ○ | ○ | PA6 |
| 15 | ○ | ○ | PC4 | 31 | ○ | ○ | D1 | 47 | ○ | | A1 | 63 | ○ | ○ | PA7 |
| 16 | ○ | ○ | PC5 | 32 | ○ | ○ | D2 | 48 | ○ | | A2 | 64 | ○ | ○ | PB0 |

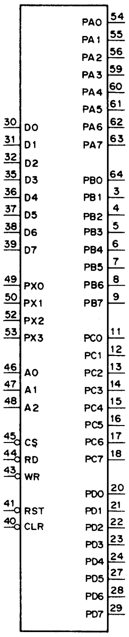
30 D0
31 D1
32 D2
35 D3
36 D4
37 D5
38 D6
39 D7
49 PX0
50 PX1
52 PX2
53 PX3
46 A0
47 A1
48 A2
45 CS
44 RD
43 WR
41 RST
40 CLR
PA0 54
PA1 55
PA2 56
PA3 59
PA4 60
PA5 61
PA6 62
PA7 63
PB0 64
PB1 3
PB2 4
PB3 5
PB4 6
PB5 7
PB6 8
PB7 9
PC0 11
PC1 12
PC2 13
PC3 14
PC4 15
PC5 16
PC6 17
PC7 18
PD0 20
PD1 21
PD2 22
PD3 23
PD4 24
PD5 27
PD6 28
PD7 29

| CS | RD | WR | A2 | A1 | A0 | MODE |
|---|---|---|---|---|---|---|
| 0 | 0 | 1 | 0 | 0 | 0 | PORT A → DATA BUS |
| 0 | 0 | 1 | 0 | 0 | 1 | PORT B → DATA BUS |
| 0 | 0 | 1 | 0 | 1 | 0 | PORT C → DATA BUS |
| 0 | 0 | 1 | 0 | 1 | 1 | PORT D → DATA BUS |
| 0 | 0 | 1 | 1 | 0 | 0 | PORT X → DATA BUS |
| 0 | 0 | 1 | 1 | 0 | 1 | —— |
| 0 | 0 | 1 | 1 | 1 | 0 | —— |
| 0 | 0 | 1 | 1 | 1 | 1 | —— |
| 0 | 1 | 0 | 0 | 0 | 0 | DATA BUS → PORT A |
| 0 | 1 | 0 | 0 | 0 | 1 | DATA BUS → PORT B |
| 0 | 1 | 0 | 0 | 1 | 0 | DATA BUS → PORT C |
| 0 | 1 | 0 | 0 | 1 | 1 | DATA BUS → PORT D |
| 0 | 1 | 0 | 1 | 0 | 0 | DATA BUS → PORT X |
| 0 | 1 | 0 | 1 | 0 | 1 | —— |
| 0 | 1 | 0 | 1 | 1 | 0 | DATA BUS → CTL REG.1 |
| 0 | 1 | 0 | 1 | 1 | 1 | DATA BUS → CTL REG.2 |
| 1 | X | X | X | X | X | DATA BUS ; HI-Z |

0; LOW LEVEL
1; HIGH LEVEL
X; DON'T CARE
HI-Z, HIGH IMPEDANCE

D0-D7 ; DATA BUS INPUTS/OUTPUTS
CS ; CHIP SELECT INPUT
RD ; READ STROBE INPUT
WR ; WRITE STROBE INPUT
A0-A2 ; ADDRESS INPUT
RST ; RESET INPUT
CLR ; CLEAR INPUT
PA0-PA7 ; PORT A INPUTS/OUTPUTS
PB0-PB7 ; PORT B INPUTS/OUTPUTS
PC0-PC7 ; PORT C INPUTS/OUTPUTS
PD0-PD7 ; PORT D INPUTS/OUTPUTS
PX0-PX3 ; PORT X INPUTS/OUTPUTS

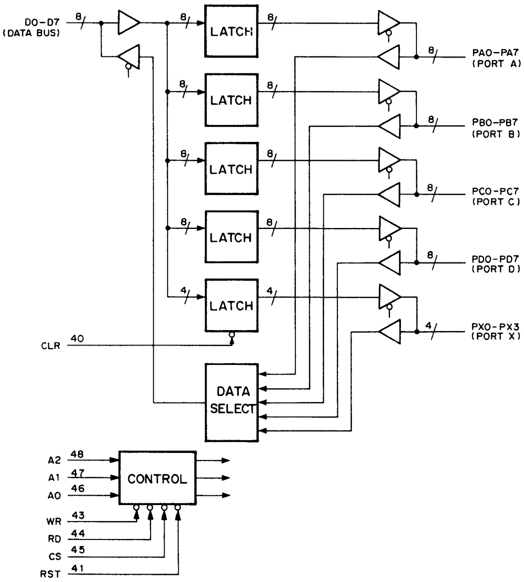
D0-D7 (DATA BUS)
8
LATCH
LATCH
LATCH
LATCH
LATCH
4
PA0-PA7 (PORT A)
PB0-PB7 (PORT B)
PC0-PC7 (PORT C)
PD0-PD7 (PORT D)
PX0-PX3 (PORT X)
CLR 40
DATA SELECT
A2 48
A1 47
A0 46
CONTROL
WR 43
RD 44
CS 45
RST 41

## CXK5816SP-15L (SONY) (ACCESS TIME = 150nS)

C-MOS 16384-BIT (2048x8) STATIC RAM
- TOP VIEW -

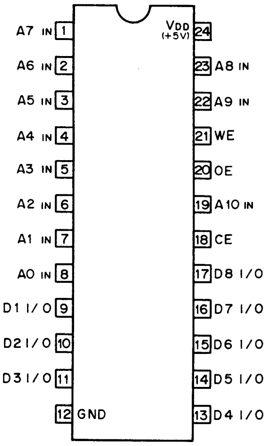
A7 IN 1
A6 IN 2
A5 IN 3
A4 IN 4
A3 IN 5
A2 IN 6
A1 IN 7
A0 IN 8
D1 I/O 9
D2 I/O 10
D3 I/O 11
12 GND
VDD (+5V) 24
23 A8 IN
22 A9 IN
21 WE
20 OE
19 A10 IN
18 CE
17 D8 I/O
16 D7 I/O
15 D6 I/O
14 D5 I/O
13 D4 I/O

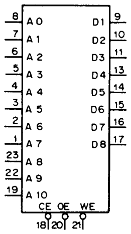
8 A0
7 A1
6 A2
5 A3
4 A4
3 A5
2 A6
1 A7
23 A8
22 A9
19 A10
D1 9
D2 10
D3 11
D4 13
D5 14
D6 15
D7 16
D8 17
CE OE WE
18 20 21

A0-A10 ; ADDRESS INPUTS
CE ; CHIP ENABLE INPUT
D1-D8 ; DATA INPUTS/OUTPUTS
OE ; OUTPUT ENABLE INPUT
WE ; WRITE ENABLE INPUT

FUNCTION TABLE

| CONTROL INPUTS | | | MODE | D1-D8 |
|---|---|---|---|---|
| CE | OE | WE | | |
| 1 | X | X | NO CHANGE | HI-Z |
| 0 | 1 | 1 | DISABLE OUTPUT | HI-Z |
| 0 | 0 | 1 | READ | OUTPUT |
| 0 | X | 0 | WRITE | INPUT |

0 ; LOW LEVEL
1 ; HIGH LEVEL
X ; DON'T CARE
HI-Z ; HIGH IMPEDANCE

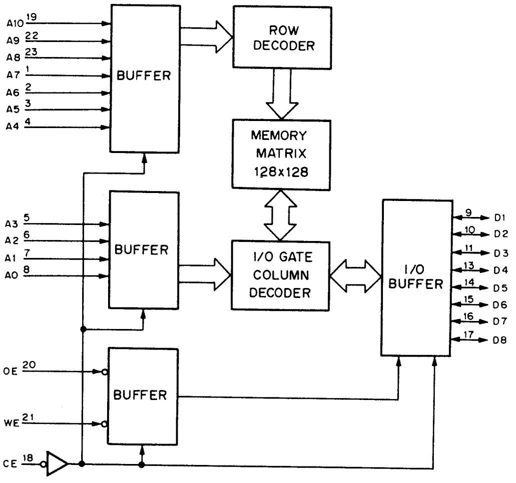
A10 19
A9 22
A8 23
A7 1
A6 2
A5 3
A4 4
BUFFER
ROW DECODER
MEMORY MATRIX 128x128
A3 5
A2 6
A1 7
A0 8
BUFFER
I/O GATE COLUMN DECODER
I/O BUFFER
9 D1
10 D2
11 D3
13 D4
14 D5
15 D6
16 D7
17 D8
OE 20
WE 21
CE 18
BUFFER

CXK5864BP-10L (SONY) (ACCESS TIME = 100nS)

C-MOS 64K (8Kx8-BIT) STATIC RAM

– TOP VIEW –

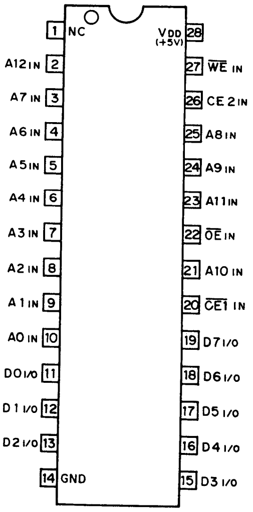
1 NC
2 A12 IN
3 A7 IN
4 A6 IN
5 A5 IN
6 A4 IN
7 A3 IN
8 A2 IN
9 A1 IN
10 A0 IN
11 D0 I/O
12 D1 I/O
13 D2 I/O
14 GND
28 VDD (+5V)
27 $\overline{\text{WE}}$ IN
26 CE2 IN
25 A8 IN
24 A9 IN
23 A11 IN
22 $\overline{\text{OE}}$ IN
21 A10 IN
20 $\overline{\text{CE1}}$ IN
19 D7 I/O
18 D6 I/O
17 D5 I/O
16 D4 I/O
15 D3 I/O

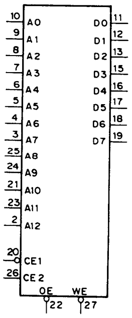
10 A0
9 A1
8 A2
7 A3
6 A4
5 A5
4 A6
3 A7
25 A8
24 A9
21 A10
23 A11
2 A12
20 CE1
26 CE2
OE 22
WE 27
D0 11
D1 12
D2 13
D3 15
D4 16
D5 17
D6 18
D7 19

A0–A12 ; ADDRESS INPUTS
$\overline{\text{CE1}}$, CE2 ; CHIP ENABLE 1, 2 INPUTS
D0–D7 ; DATA INPUTS/OUTPUTS
$\overline{\text{OE}}$ ; OUTPUT ENABLE INPUT
$\overline{\text{WE}}$ ; WRITE ENABLE INPUT

MODE SELECTION

| CONTROL INPUTS | | | | MODE |
|---|---|---|---|---|
| $\overline{\text{CE1}}$ | CE2 | $\overline{\text{OE}}$ | $\overline{\text{WE}}$ | |
| 1 | X | X | X | NO CHANGE |
| X | 0 | X | X | NO CHANGE |
| 0 | 1 | 1 | 1 | DISABLE OUTPUT |
| 0 | 1 | 0 | 1 | READ |
| 0 | 1 | X | 0 | WRITE |

0 ; LOW LEVEL
1 ; HIGH LEVEL
X ; DON'T CARE

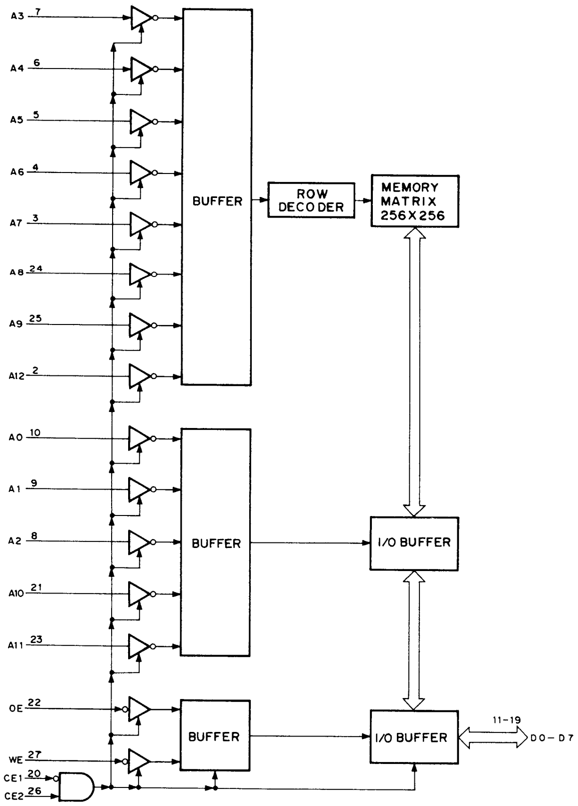
A3 7
A4 6
A5 5
A6 4
A7 3
A8 24
A9 25
A12 2
A0 10
A1 9
A2 8
A10 21
A11 23
OE 22
WE 27
CE1 20
CE2 26
BUFFER
ROW DECODER
MEMORY MATRIX 256X256
BUFFER
I/O BUFFER
BUFFER
I/O BUFFER
11-19
D0-D7

CXQ70108P-8 (SONY)

C-MOS 8-BIT MICROPROCESSOR
- TOP VIEW -

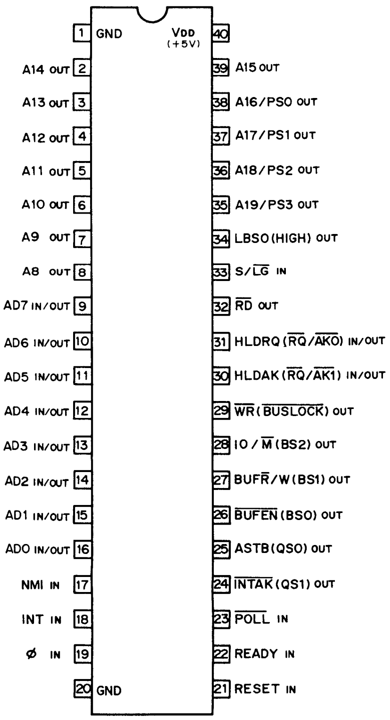
1 GND
VDD (+5V) 40
A14 OUT 2
A13 OUT 3
A12 OUT 4
A11 OUT 5
A10 OUT 6
A9 OUT 7
A8 OUT 8
AD7 IN/OUT 9
AD6 IN/OUT 10
AD5 IN/OUT 11
AD4 IN/OUT 12
AD3 IN/OUT 13
AD2 IN/OUT 14
AD1 IN/OUT 15
AD0 IN/OUT 16
NMI IN 17
INT IN 18
Ø IN 19
20 GND
39 A15 OUT
38 A16/PS0 OUT
37 A17/PS1 OUT
36 A18/PS2 OUT
35 A19/PS3 OUT
34 LBS0(HIGH) OUT
33 S/LG IN
32 RD OUT
31 HLDRQ(RQ/AK0) IN/OUT
30 HLDAK(RQ/AK1) IN/OUT
29 WR(BUSLOCK) OUT
28 IO/M(BS2) OUT
27 BUFR/W(BS1) OUT
26 BUFEN(BS0) OUT
25 ASTB(QS0) OUT
24 INTAK(QS1) OUT
23 POLL IN
22 READY IN
21 RESET IN

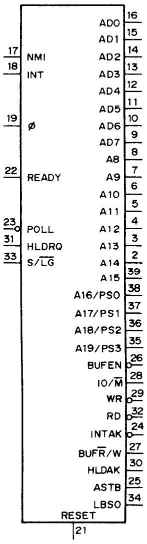
17 NMI
18 INT
19 Ø
22 READY
23 POLL
31 HLDRQ
33 S/LG
AD0 16
AD1 15
AD2 14
AD3 13
AD4 12
AD5 11
AD6 10
AD7 9
A8 8
A9 7
A10 6
A11 5
A12 4
A13 3
A14 2
A15 39
A16/PS0 38
A17/PS1 37
A18/PS2 36
A19/PS3 35
BUFEN 26
IO/M 28
WR 29
RD 32
INTAK 24
BUFR/W 27
HLDAK 30
ASTB 25
LBS0 34
RESET 21

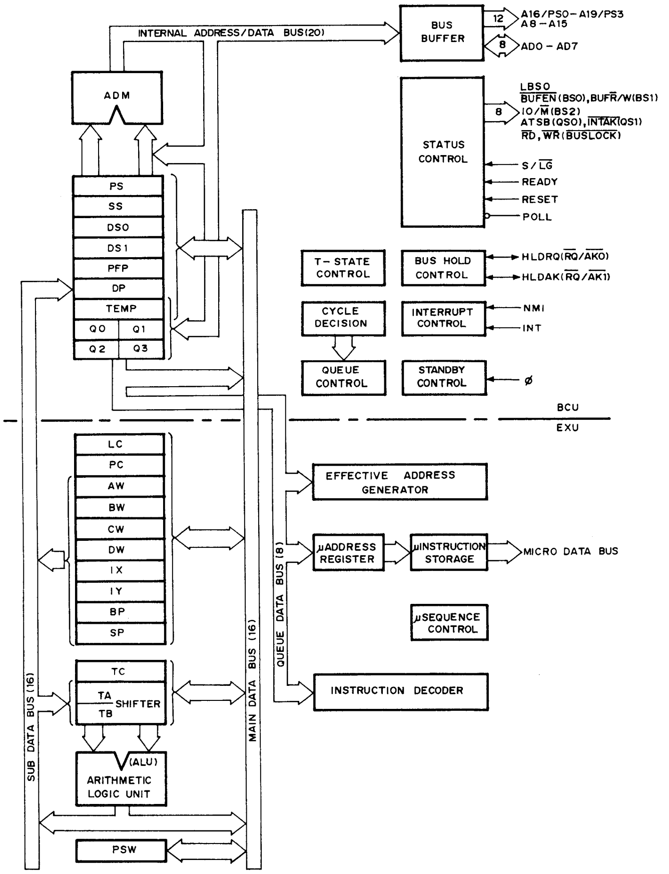
INTERNAL ADDRESS/DATA BUS(20)
BUS BUFFER
12
A16/PS0-A19/PS3
A8-A15
8
AD0-AD7
ADM
STATUS CONTROL
8
LBS0
BUFEN(BS0), BUFR/W(BS1)
IO/M(BS2)
ATSB(QS0), INTAK(QS1)
RD, WR(BUSLOCK)
S/LG
READY
RESET
POLL
PS
SS
DS0
DS1
PFP
DP
TEMP
Q0
Q1
Q2
Q3
T-STATE CONTROL
BUS HOLD CONTROL
HLDRQ(RQ/AK0)
HLDAK(RQ/AK1)
CYCLE DECISION
INTERRUPT CONTROL
NMI
INT
QUEUE CONTROL
STANDBY CONTROL
Ø
BCU
EXU
LC
PC
AW
BW
CW
DW
IX
IY
BP
SP
EFFECTIVE ADDRESS GENERATOR
μADDRESS REGISTER
μINSTRUCTION STORAGE
MICRO DATA BUS
μSEQUENCE CONTROL
QUEUE DATA BUS (8)
MAIN DATA BUS (16)
SUB DATA BUS (16)
INSTRUCTION DECODER
TC
TA
TB
SHIFTER
(ALU)
ARITHMETIC LOGIC UNIT
PSW

| PIN No. | FUNCTION | |
|---|---|---|
| | S/$\overline{LG}$=HIGH LEVEL | S/$\overline{LG}$=LOW LEVEL |
| 24 | $\overline{INTAK}$ | QS1 |
| 25 | ASTB | QS0 |
| 26 | $\overline{BUFEN}$ | BS0 |
| 27 | BUF $\overline{R}$/W | BS1 |
| 28 | IO/$\overline{M}$ | BS2 |
| 29 | $\overline{WR}$ | $\overline{BUSLOCK}$ |
| 30 | HLDAK | $\overline{RQ}$/$\overline{AK1}$ |
| 31 | HLDRQ | $\overline{RQ}$/$\overline{AK0}$ |
| 34 | LBS0 | HIGH LEVEL |

A8-A15; ADDRESS BUS OUTPUTS
AD0-AD7; ADDRESS/DATA BUS INPUTS/OUTPUTS
NMI; NON-MASKABLE INTERRUPT INPUT
INT; MASKABLE INTERRUPT INPUT
Ø; CLOCK INPUT
$\overline{INTAK}$; INTERRUPT ACKNOWLEDGE OUTPUT
ASTB; ADDRESS STROBE OUTPUT
$\overline{BUFEN}$; BUFFER ENABLE OUTPUT
BUF$\overline{R}$/W; BUFFER READ/WRITE OUTPUT
IO/$\overline{M}$; IO/MEMORY OUTPUT
$\overline{WR}$; WRITE STROBE OUTPUT
HLDAK; HOLD ACKNOWLEDGE OUTPUT
HLDRQ; HOLD REQUEST INPUT
$\overline{RD}$; READ STROBE OUTPUT
S/$\overline{LG}$; SMALL/$\overline{LARGE}$ INPUT
LBS0; LATCHED BUS STATUS 0 OUTPUT
A16/PS0-A19/PS3; ADDRESS BUS/PROCESSOR STATUS OUTPUTS
QS0,1; QUEUE STATUS OUTPUTS
BS0-BS2; BUS STATUS OUTPUTS
$\overline{BUSLOCK}$; BUS LOCK OUTPUT
$\overline{RQ}$/$\overline{AK0,1}$; HOLD REQUEST/ACKNOWLEDGE INPUTS/OUTPUTS

CXQ71011P (SONY)

C-MOS CLOCK PULSE GENERATOR/DRIVER
– TOP VIEW –

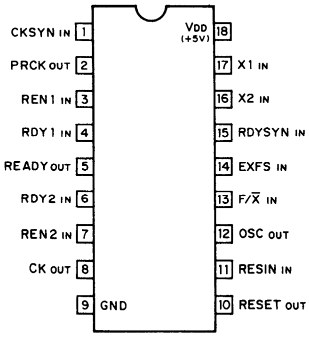
CKSYN IN 1
PRCK OUT 2
REN1 IN 3
RDY1 IN 4
READY OUT 5
RDY2 IN 6
REN2 IN 7
CK OUT 8
9 GND
VDD (+5V) 18
17 X1 IN
16 X2 IN
15 RDYSYN IN
14 EXFS IN
13 F/X̄ IN
12 OSC OUT
11 RESIN IN
10 RESET OUT

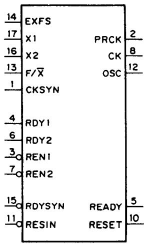
14 EXFS
17 X1
16 X2
13 F/X̄
1 CKSYN
4 RDY1
6 RDY2
3 REN1
7 REN2
15 RDYSYN
11 RESIN
PRCK 2
CK 8
OSC 12
READY 5
RESET 10

X1,X2 ; CRYSTAL INPUT
EXFS ; EXTERNAL FREQUENCY SOURCE INPUT
F/X̄ ; FREQUENCY/CRYSTAL SELECT INPUT
CK ; PROCESSOR CLOCK OUTPUT
PRCK ; PERIPHERAL CLOCK OUTPUT
OSC ; OSCILLATOR OUTPUT
CKSYN ; CLOCK SYNCHRONIZATION INPUT
RESIN ; RESET INPUT
RDY1,RDY2 ; BUS READY INPUT
REN1,REN2 ; READY ENABLE INPUT
RDYSYN ; READY SYNCHRONIZATION SELECT INPUT

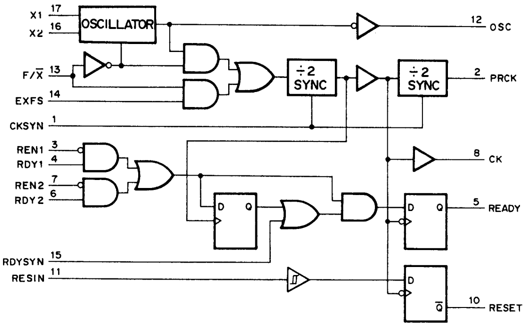
X1 17
X2 16
OSCILLATOR
F/X̄ 13
EXFS 14
CKSYN 1
REN1 3
RDY1 4
REN2 7
RDY2 6
RDYSYN 15
RESIN 11
÷2 SYNC
÷2 SYNC
D Q
12 OSC
2 PRCK
8 CK
5 READY
10 RESET

CXQ71051P (SONY)

C-MOS SERIAL CONTROL UNIT
– TOP VIEW –

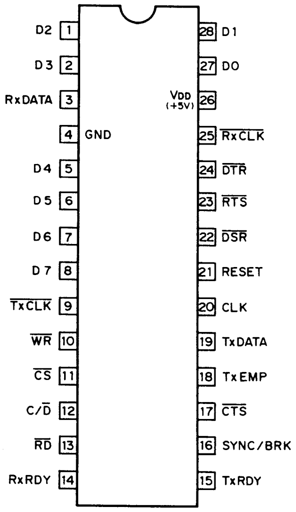
D2 1
D3 2
RxDATA 3
4 GND
D4 5
D5 6
D6 7
D7 8
T̄x̄C̄L̄K̄ 9
W̄R̄ 10
C̄S̄ 11
C/D̄ 12
R̄D̄ 13
RxRDY 14
28 D1
27 D0
VDD (+5V) 26
25 R̄x̄C̄L̄K̄
24 D̄T̄R̄
23 R̄T̄S̄
22 D̄S̄R̄
21 RESET
20 CLK
19 TxDATA
18 TxEMP
17 C̄T̄S̄
16 SYNC/BRK
15 TxRDY

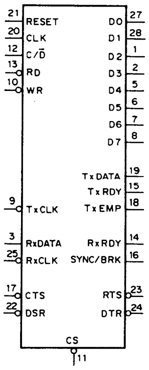
21 RESET
20 CLK
12 C/D̄
13 RD
10 WR
9 TxCLK
3 RxDATA
25 RxCLK
17 CTS
22 DSR
CS 11
D0 27
D1 28
D2 1
D3 2
D4 5
D5 6
D6 7
D7 8
TxDATA 19
TxRDY 15
TxEMP 18
RxRDY 14
SYNC/BRK 16
RTS 23
DTR 24

CLK :CLOCK
CS :CHIP SELECT
CTS :CLEAR TO SEND
C/D :CONTROL OR DATA
D0-7 :DATA BUS
DSR :DATA SET READY
DTR :DATA TERMINAL READY
RD :READ STROBE
RESET :RESET
RTS :REQUEST TO SEND
RXCLK :RECEIVER CLOCK
RXDATA :RECEIVE DATA
RXRDY :RECEIVER READY
SYNC/BRK:SYNCRONIZATION/BREAK
TXCLK :TRANSMITTER CLOCK
TXDATA :TRANSMIT DATA
TXEMP :TRANSMITTER EMPTY
TXRDY :TRANSMITTER READY
WR :WRITE STROBE

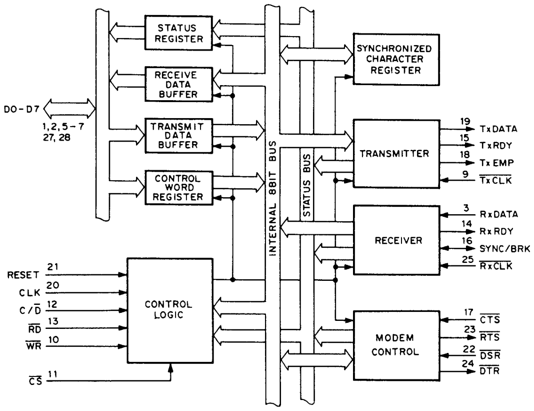
STATUS REGISTER
RECEIVE DATA BUFFER
TRANSMIT DATA BUFFER
CONTROL WORD REGISTER
SYNCHRONIZED CHARACTER REGISTER
TRANSMITTER
RECEIVER
MODEM CONTROL
CONTROL LOGIC
INTERNAL 8BIT BUS
STATUS BUS
D0-D7
1,2,5-7 27,28
RESET 21
CLK 20
C/D̄ 12
R̄D̄ 13
W̄R̄ 10
C̄S̄ 11
19 TxDATA
15 TxRDY
18 TxEMP
9 T̄x̄C̄L̄K̄
3 RxDATA
14 RxRDY
16 SYNC/BRK
25 R̄x̄C̄L̄K̄
17 C̄T̄S̄
23 R̄T̄S̄
22 D̄S̄R̄
24 D̄T̄R̄

| $\overline{CS}$ | $\overline{RD}$ | $\overline{WR}$ | $C/\overline{D}$ | MODE | FUNCTION |
|---|---|---|---|---|---|
| 0 | 0 | 1 | 0 | RECEIVE DATA BUFFER--> DATA BUS | READ RECEIVE DATA |
| 0 | 0 | 1 | 1 | STATUS REGISTER--> DATA BUS | READ STATUS |
| 0 | 1 | 0 | 0 | DATA BUS--> TRANSMIT DATA BUFFER | WRITE RECEIVE DATA |
| 0 | 1 | 0 | 1 | DATA BUS--> CONTROL WORD REGISTER | WRITE CONTROL WORD |
| 0 | 1 | 1 | X | DATA BUS:HIGH IMPEDANCE | |
| 1 | X | X | X | DATA BUS:HIGH IMPEDANCE | |

1:HIGH LEVEL
0:LOW LEVEL
X:DON'T CARE

## CXQ71054P (SONY)

C-MOS PROGRAMMABLE INTERVAL TIMER
- TOP VIEW -

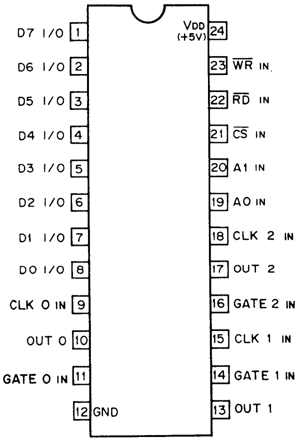
D7 I/O 1
D6 I/O 2
D5 I/O 3
D4 I/O 4
D3 I/O 5
D2 I/O 6
D1 I/O 7
D0 I/O 8
CLK 0 IN 9
OUT 0 10
GATE 0 IN 11
12 GND
VDD (+5V) 24
23 WR IN
22 RD IN
21 CS IN
20 A1 IN
19 A0 IN
18 CLK 2 IN
17 OUT 2
16 GATE 2 IN
15 CLK 1 IN
14 GATE 1 IN
13 OUT 1

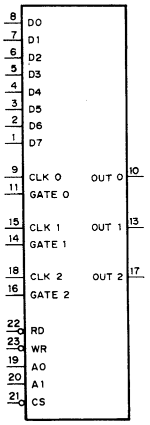
8 D0
7 D1
6 D2
5 D3
4 D4
3 D5
2 D6
1 D7
9 CLK 0
11 GATE 0
OUT 0 10
15 CLK 1
14 GATE 1
OUT 1 13
18 CLK 2
16 GATE 2
OUT 2 17
22 RD
23 WR
19 A0
20 A1
21 CS

FUNCTION TABLE

| INPUTS | | | | | FUNCTION |
|---|---|---|---|---|---|
| CS | RD | WR | A1 | A0 | |
| 0 | 1 | 0 | 0 | 0 | Load Counter No. 0 |
| 0 | 1 | 0 | 0 | 1 | Load Counter No. 1 |
| 0 | 1 | 0 | 1 | 0 | Load Counter No. 2 |
| 0 | 1 | 0 | 1 | 1 | Control Word |
| 0 | 0 | 1 | 0 | 0 | Read Counter 0 |
| 0 | 0 | 1 | 0 | 1 | Read Counter 1 |
| 0 | 0 | 1 | 1 | 0 | Read Counter 2 |
| 0 | 0 | 1 | 1 | 1 | No-Operation (HI-Z) |
| 1 | X | X | X | X | Disable (HI-Z) |
| 0 | 1 | 1 | X | X | No-Operation (HI-Z) |

| | | |
|---|---|---|
| D7-D0 | ; | 8-BIT DATA I/O |
| CLK 0-2 | ; | COUNTER CLOCK |
| GATE 0-2 | ; | COUNTER GATE |
| OUT 0-2 | ; | COUNTER OUTPUT |
| RD | ; | READ COUNTER |
| WR | ; | WRITE CMD OR DATA |
| CS | ; | CHIP SELECT |
| A0, A1 | ; | COUNTER SELECT |

0; LOW LEVEL
1; HIGH LEVEL
X; DON'T CARE
HI-Z; HIGH IMPEDANCE

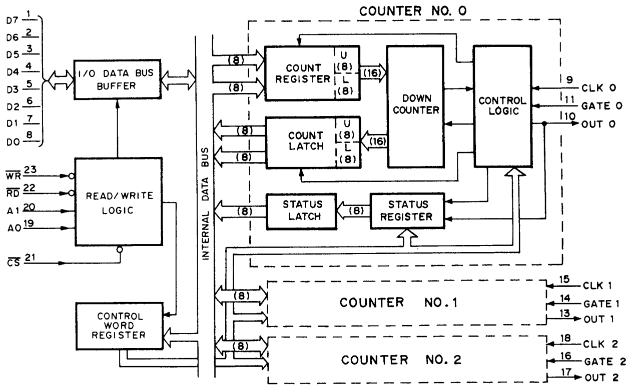
COUNTER NO. 0
D7 1
D6 2
D5 3
D4 4
D3 5
D2 6
D1 7
D0 8
I/O DATA BUS BUFFER
WR 23
RD 22
A1 20
A0 19
CS 21
READ/WRITE LOGIC
CONTROL WORD REGISTER
INTERNAL DATA BUS
(8)
COUNT REGISTER
U (8) L (8)
(16)
DOWN COUNTER
CONTROL LOGIC
COUNT LATCH
STATUS LATCH
STATUS REGISTER
9 CLK 0
11 GATE 0
10 OUT 0
COUNTER NO. 1
15 CLK 1
14 GATE 1
13 OUT 1
COUNTER NO. 2
18 CLK 2
16 GATE 2
17 OUT 2

CONTROL WORD FORMAT

| D7 | D6 | D5 | D4 | D3 | D2 | D1 | D0 |
|---|---|---|---|---|---|---|---|
| SC1 | SC0 | RL1 | RL0 | M2 | M1 | M0 | BCD |

| BCD | OPERATION |
|---|---|
| 0 | 16-BIT BINARY |
| 1 | BCD (4-DECADE) |

| M2 | M1 | M0 | MODE |
|---|---|---|---|
| 0 | 0 | 0 | 0 |
| 0 | 0 | 1 | 1 |
| X | 1 | 0 | 2 |
| X | 1 | 1 | 3 |
| 1 | 0 | 0 | 4 |
| 1 | 0 | 1 | 5 |

| RL1 | RL0 | OPERATION |
|---|---|---|
| 0 | 0 | COUNTER LATCHING |
| 0 | 1 | READ/LOAD LSB ONLY |
| 1 | 0 | READ/LOAD MSB ONLY |
| 1 | 1 | LSB FIRST THEN MSB |

| SC1 | SC0 | SELECTED COUNTER |
|---|---|---|
| 0 | 0 | COUNTER No. 0 |
| 0 | 1 | COUNTER No. 1 |
| 1 | 0 | COUNTER No. 2 |
| 1 | 1 | MULTIPLE LATCH CMD |

## CXQ71059P (SONY)

C-MOS INTERRUPT CONTROL UNIT
- TOP VIEW -

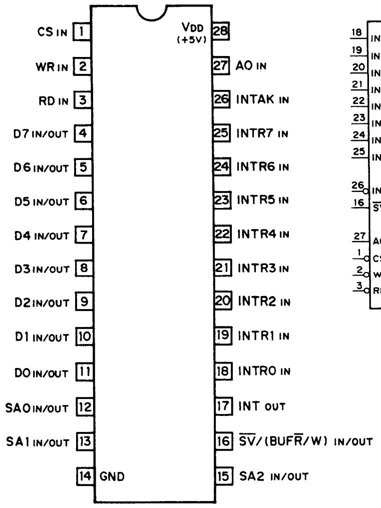
CS IN 1
WR IN 2
RD IN 3
D7 IN/OUT 4
D6 IN/OUT 5
D5 IN/OUT 6
D4 IN/OUT 7
D3 IN/OUT 8
D2 IN/OUT 9
D1 IN/OUT 10
D0 IN/OUT 11
SA0 IN/OUT 12
SA1 IN/OUT 13
14 GND
VDD (+5V) 28
27 A0 IN
26 INTAK IN
25 INTR7 IN
24 INTR6 IN
23 INTR5 IN
22 INTR4 IN
21 INTR3 IN
20 INTR2 IN
19 INTR1 IN
18 INTR0 IN
17 INT OUT
16 SV/(BUFR/W) IN/OUT
15 SA2 IN/OUT

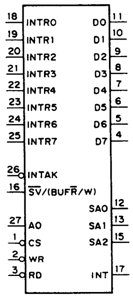
18 INTR0
19 INTR1
20 INTR2
21 INTR3
22 INTR4
23 INTR5
24 INTR6
25 INTR7
26 INTAK
16 SV/(BUFR/W)
27 A0
1 CS
2 WR
3 RD
D0 11
D1 10
D2 9
D3 8
D4 7
D5 6
D6 5
D7 4
SA0 12
SA1 13
SA2 15
INT 17

| | | |
|---|---|---|
| INTR0-INTR7 | ; | INTERRUPT REQUEST INPUTS |
| D0-D7 | ; | DATA BUS INPUTS/OUTPUTS |
| CS | ; | CHIP SELECT INPUT |
| RD | ; | READ STROBE INPUT |
| WR | ; | WRITE STROBE INPUT |
| A0 | ; | ADDRESS INPUT |
| INT | ; | INTERRUPT OUTPUT |
| INTAK | ; | INTERRUPT ACKNOWLEDGE INPUT |
| SV/(BUFR/W) | ; | SLAVE/BUFFER READ/WRITE INPUT/OUTPUT |
| SA0-SA2 | ; | SLAVE ADDRESS INPUTS/OUTPUTS |

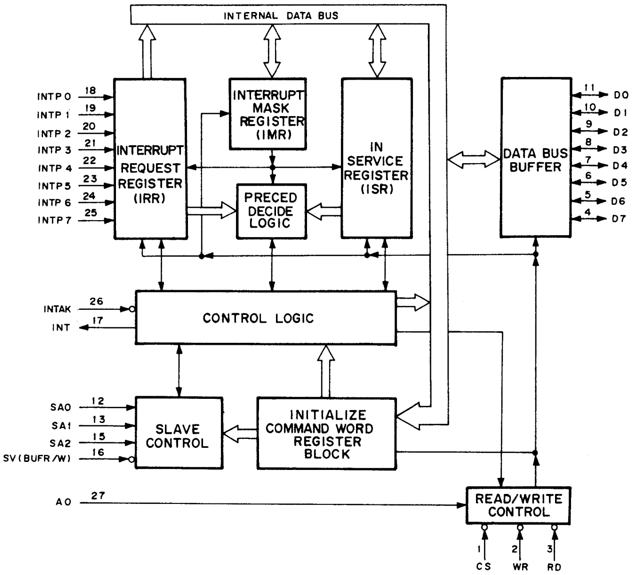
INTERNAL DATA BUS
INTP 0 18
INTP 1 19
INTP 2 20
INTP 3 21
INTP 4 22
INTP 5 23
INTP 6 24
INTP 7 25
INTERRUPT REQUEST REGISTER (IRR)
INTERRUPT MASK REGISTER (IMR)
PRECED DECIDE LOGIC
IN SERVICE REGISTER (ISR)
DATA BUS BUFFER
11 D0
10 D1
9 D2
8 D3
7 D4
6 D5
5 D6
4 D7
INTAK 26
INT 17
CONTROL LOGIC
SA0 12
SA1 13
SA2 15
SV (BUFR/W) 16
SLAVE CONTROL
INITIALIZE COMMAND WORD REGISTER BLOCK
A0 27
READ/WRITE CONTROL
1 CS
2 WR
3 RD

HD10101 (HITACHI)
MC10101L (MOTOROLA)

ECL 2-INPUT OR/NOR GATE
- TOP VIEW -

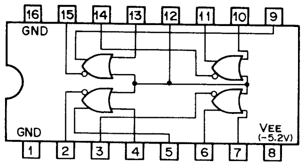
16
15
14
13
12
11
10
9
GND
GND
VEE
(-5.2V)
1
2
3
4
5
6
7
8

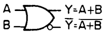
A
B
Y=A+B
$\overline{Y}=\overline{A+B}$

| A | B | Y | $\overline{Y}$ |
|---|---|---|---|
| 0 | 0 | 0 | 1 |
| 0 | 1 | 1 | 0 |
| 1 | 0 | 1 | 0 |
| 1 | 1 | 1 | 0 |

0; LOW LEVEL
1; HIGH LEVEL

MC10H107L (MOTOROLA)

ECL EXCLUSIVE OR/NOR GATE
- TOP VIEW -

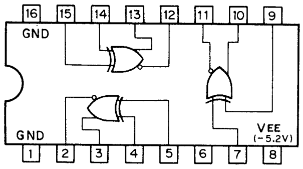
16
15
14
13
12
11
10
9
GND
GND
VEE
(-5.2V)
1
2
3
4
5
6
7
8

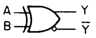
A
B
Y
$\overline{Y}$

| A | B | Y | $\overline{Y}$ |
|---|---|---|---|
| 0 | 0 | 0 | 1 |
| 0 | 1 | 1 | 0 |
| 1 | 0 | 1 | 0 |
| 1 | 1 | 0 | 1 |

0; LOW LEVEL
1; HIGH LEVEL

MC10H115L (MOTOROLA)

ECL LINE RECEIVER
- TOP VIEW -

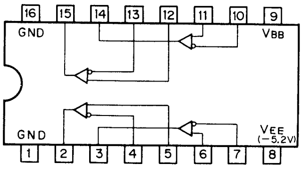
16
15
14
13
12
11
10
9
GND
VBB
GND
VEE
(-5.2V)
1
2
3
4
5
6
7
8

MC10H116L (MOTOROLA)

ECL DIFFERENTIAL OR/NOR LINE RECEIVER
- TOP VIEW -

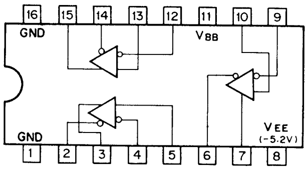
16
15
14
13
12
11
10
9
GND
VBB
GND
VEE
(-5.2V)
1
2
3
4
5
6
7
8

MC10H117L (MOTOROLA)

ECL 2-WIDE 2-3-INPUT OR-AND/OR-AND-INVERT GATE
- TOP VIEW -

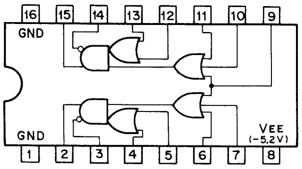
16
15
14
13
12
11
10
9
GND
GND
VEE
(-5.2V)
1
2
3
4
5
6
7
8

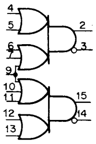
4
5
6
7
9
10
11
12
13
2
3
15
14

MC10H131L (MOTOROLA)

ECL D-TYPE FLIP FLOP
- TOP VIEW -

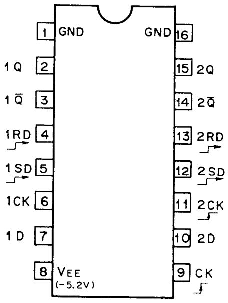
1 GND
1Q 2
1$\overline{Q}$ 3
1RD 4
1SD 5
1CK 6
1D 7
8 VEE (-5.2V)
GND 16
15 2Q
14 2$\overline{Q}$
13 2RD
12 2SD
11 2CK
10 2D
9 CK

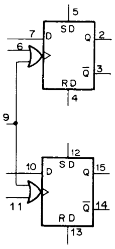
5
SD
7
D
Q
2
6
$\overline{Q}$
3
RD
4
9
12
SD
10
D
Q
15
11
$\overline{Q}$
14
RD
13

| INPUTS | | | | OUTPUTS | |
|---|---|---|---|---|---|
| SD | RD | CK | D | Qn+1 | $\overline{Qn+1}$ |
| 1 | 0 | X | X | 1 | 0 |
| 0 | 1 | X | X | 0 | 1 |
| 1 | 1 | X | X | ND | ND |
| 0 | 0 | ↑ | 1 | 1 | 0 |
| 0 | 0 | ↑ | 0 | 0 | 1 |
| 0 | 0 | 0 | X | Qn | $\overline{Qn}$ |

0; LOW LEVEL
1; HIGH LEVEL
X; DON'T CARE
ND; NOT DEFINED

MC12090L (MOTOROLA)

ECL HIGH SPEED D-TYPE FLIP-FLOP
- TOP VIEW -

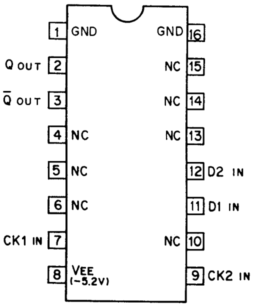
1 GND
Q OUT 2
$\overline{Q}$ OUT 3
4 NC
5 NC
6 NC
CK1 IN 7
8 VEE (-5.2V)
GND 16
NC 15
NC 14
NC 13
12 D2 IN
11 D1 IN
NC 10
9 CK2 IN

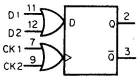
D1
11
12
D2
CK1
7
9
CK2
D
Q
2
$\overline{Q}$
3

| INPUTS | | OUTPUT |
|---|---|---|
| CK | D | Qn + 1 |
| 0 | X | Qn |
| 1 | X | Qn |
| ↑ | 0 | 0 |
| ↑ | 1 | 1 |

CK : CK1 + CK2
D : D1 + D2
0 : LOW LEVEL
1 : HIGH LEVEL
X : DON'T CARE

SN74LS06N (TI)

TTL INVERTER BUFFER/DRIVER WITH OPEN-COLLECTOR
- TOP VIEW -

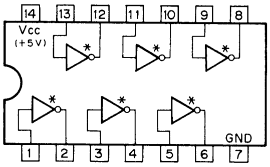
14
13
12
11
10
9
8
Vcc
(+5V)
GND
1
2
3
4
5
6
7

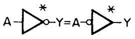

Y = $\overline{A}$

| A | Y |
|---|---|
| 0 | 1 |
| 1 | 0 |

0; LOW LEVEL
1; HIGH LEVEL
*; OPEN COLLECTOR

SN74LS112AN (TI)

TTL J-K FLIP-FLOP WITH DIRECT SET/RESET
- TOP VIEW -

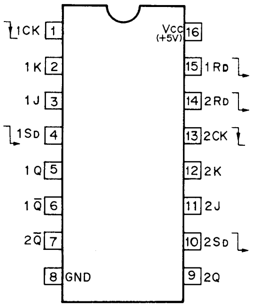
1CK 1
1K 2
1J 3
1SD 4
1Q 5
1$\overline{Q}$ 6
2$\overline{Q}$ 7
8 GND
Vcc (+5V) 16
15 1RD
14 2RD
13 2CK
12 2K
11 2J
10 2SD
9 2Q

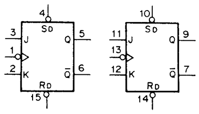
4
SD
3
J
Q
5
1
2
K
$\overline{Q}$
6
RD
15
10
SD
11
J
Q
9
13
12
K
$\overline{Q}$
7
RD
14

| INPUTS | | | | | OUTPUTS | |
|---|---|---|---|---|---|---|
| SD | RD | CK | J | K | Qn+1 | $\overline{Qn+1}$ |
| 0 | 1 | X | X | X | 1 | 0 |
| 1 | 0 | X | X | X | 0 | 1 |
| 0 | 0 | X | X | X | 1* | 1* |
| 1 | 1 | ↓ | 0 | 0 | Qn | $\overline{Qn}$ |
| | | | 0 | 1 | 0 | 1 |
| | | | 1 | 0 | 1 | 0 |
| | | | 1 | 1 | $\overline{Qn}$ | Qn |
| 1 | 1 | 1 | X | X | Qn | $\overline{Qn}$ |

0; LOW LEVEL X; DON'T CARE
1; HIGH LEVEL *; NONSTABLE

## SN74120N (TI)

TTL PULSE SYNCHRONIZER/DRIVER
- TOP VIEW -

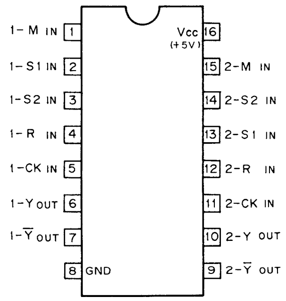
1-M IN 1
1-S1 IN 2
1-S2 IN 3
1-R IN 4
1-CK IN 5
1-Y OUT 6
1-$\overline{Y}$ OUT 7
8 GND
Vcc (+5V) 16
15 2-M IN
14 2-S2 IN
13 2-S1 IN
12 2-R IN
11 2-CK IN
10 2-Y OUT
9 2-$\overline{Y}$ OUT

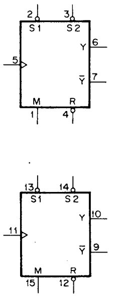
2
3
S1
S2
Y
6
5
$\overline{Y}$
7
M
R
1
4
13
14
S1
S2
Y
10
11
$\overline{Y}$
9
M
R
15
12

| INPUT M | OUTPUT MODE |
|---|---|
| 0 | TRAIN OF PULSES |
| 1 | SINGLE PULSE |

| INPUTS | | | FUNCTION |
|---|---|---|---|
| R | S1 | S2 | |
| X | 0 | X | PASS OUTPUT PULSES |
| X | X | 0 | PASS OUTPUT PULSES |
| 0 | 1 | 1 | INHIBIT OUTPUT PULSES |
| 1 | ↓ | 1 | START OUTPUT PULSES |
| 1 | 1 | ↓ | START OUTPUT PULSES |
| ↓ | 1 | 1 | STOP OUTPUT PULSES |
| 1 | 1 | 1 | CONTINUE |

S1, S2 ; START COMMAND INPUTS
R ; STOP COMMAND INPUT
M ; MODE CONTROL INPUT
Y, $\overline{Y}$ ; SYNCHRONIZED PULSE OUTPUT

0; LOW LEVEL
1; HIGH LEVEL
X; DON'T CARE

## SN74LS123N (TI)

TTL RETRIGGERABLE MONOSTABLE MULTIVIBRATOR WITH DIRECT RESET
- TOP VIEW -

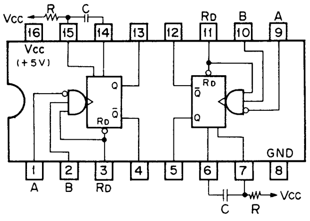
Vcc
R
C
RD
B
A
16
15
14
13
12
11
10
9
Vcc
(+5V)
Q
$\overline{Q}$
RD
RD
GND
1
2
3
4
5
6
7
8
A
B
RD
C
R
Vcc

| INPUTS | | | OUTPUTS | |
|---|---|---|---|---|
| RD | A | B | Q | $\overline{Q}$ |
| 0 | X | X | 0 | 1 |
| X | 1 | X | 0 | 1 |
| X | X | 0 | 0 | 1 |
| 1 | 0 | ↑ | ⊓ | ⊔ |
| 1 | ↓ | 1 | ⊓ | ⊔ |
| ↑ | 0 | 1 | ⊓ | ⊔ |

0; LOW LEVEL
1; HIGH LEVEL
X; DON'T CARE

OUTPUT PULSE WIDTH

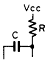

'123 ; $T_W = 0.28\left(1+\frac{700}{R}\right)CR$

'L123; $T_W = 0.33\left(1+\frac{700}{R}\right)CR$

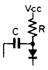

'123 ; $T_W = 0.25\left(1+\frac{700}{R}\right)CR$

'L123; $T_W = 0.29\left(1+\frac{700}{R}\right)CR$

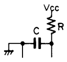

'LS123; $T_W = 0.45CR$

## SN74LS138N (TI)

TTL 3-TO-8-LINE DECODER/DEMULTIPLEXER
- TOP VIEW -

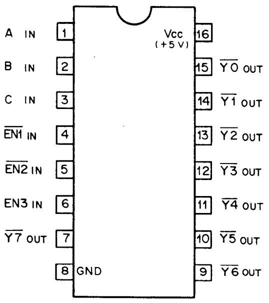
A IN 1
B IN 2
C IN 3
$\overline{EN1}$ IN 4
$\overline{EN2}$ IN 5
EN3 IN 6
$\overline{Y7}$ OUT 7
8 GND
Vcc (+5V) 16
15 $\overline{Y0}$ OUT
14 $\overline{Y1}$ OUT
13 $\overline{Y2}$ OUT
12 $\overline{Y3}$ OUT
11 $\overline{Y4}$ OUT
10 $\overline{Y5}$ OUT
9 $\overline{Y6}$ OUT

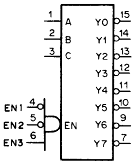
1 A
2 B
3 C
EN1 4
EN2 5
EN3 6
EN
Y0 15
Y1 14
Y2 13
Y3 12
Y4 11
Y5 10
Y6 9
Y7 7

| INPUTS | | | | OUTPUTS | | | | | | | |
|---|---|---|---|---|---|---|---|---|---|---|---|
| EN | C | B | A | $\overline{Y7}$ | $\overline{Y6}$ | $\overline{Y5}$ | $\overline{Y4}$ | $\overline{Y3}$ | $\overline{Y2}$ | $\overline{Y1}$ | $\overline{Y0}$ |
| 0 | X | X | X | 1 | 1 | 1 | 1 | 1 | 1 | 1 | 1 |
| 1 | 0 | 0 | 0 | 1 | 1 | 1 | 1 | 1 | 1 | 1 | 0 |
| 1 | 0 | 0 | 1 | 1 | 1 | 1 | 1 | 1 | 1 | 0 | 1 |
| 1 | 0 | 1 | 0 | 1 | 1 | 1 | 1 | 1 | 0 | 1 | 1 |
| 1 | 0 | 1 | 1 | 1 | 1 | 1 | 1 | 0 | 1 | 1 | 1 |
| 1 | 1 | 0 | 0 | 1 | 1 | 1 | 0 | 1 | 1 | 1 | 1 |
| 1 | 1 | 0 | 1 | 1 | 1 | 0 | 1 | 1 | 1 | 1 | 1 |
| 1 | 1 | 1 | 0 | 1 | 0 | 1 | 1 | 1 | 1 | 1 | 1 |
| 1 | 1 | 1 | 1 | 0 | 1 | 1 | 1 | 1 | 1 | 1 | 1 |

$EN = \overline{EN1} \cdot \overline{EN2} \cdot EN3$

0 ; LOW LEVEL
1 ; HIGH LEVEL
X ; DON'T CARE

## SN74LS139N (TI)

TTL 2-TO-4-LINE DECODER/DEMULTIPLEXER
- TOP VIEW -

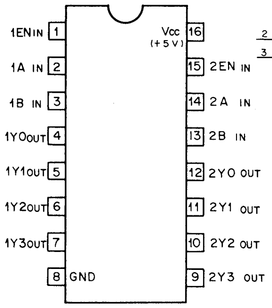
1EN IN 1
1A IN 2
1B IN 3
1Y0 OUT 4
1Y1 OUT 5
1Y2 OUT 6
1Y3 OUT 7
8 GND
Vcc (+5V) 16
15 2EN IN
14 2A IN
13 2B IN
12 2Y0 OUT
11 2Y1 OUT
10 2Y2 OUT
9 2Y3 OUT

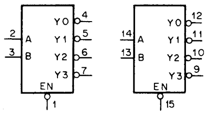
2 A
3 B
Y0 4
Y1 5
Y2 6
Y3 7
EN
1
14 A
13 B
Y0 12
Y1 11
Y2 10
Y3 9
EN
15

| INPUTS | | | OUTPUTS | | | |
|---|---|---|---|---|---|---|
| EN | B | A | Y3 | Y2 | Y1 | Y0 |
| 0 | 0 | 0 | 1 | 1 | 1 | 0 |
| 0 | 0 | 1 | 1 | 1 | 0 | 1 |
| 0 | 1 | 0 | 1 | 0 | 1 | 1 |
| 0 | 1 | 1 | 0 | 1 | 1 | 1 |
| 1 | X | X | 1 | 1 | 1 | 1 |

0 ; LOW LEVEL
1 ; HIGH LEVEL
X ; DON'T CARE

## SN75157P (TI)

DUAL DIFFERENTIAL LINE RECEIVER
- TOP VIEW -

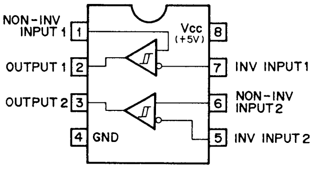
NON-INV INPUT 1 1
OUTPUT 1 2
OUTPUT 2 3
4 GND
Vcc (+5V) 8
7 INV INPUT1
6 NON-INV INPUT2
5 INV INPUT2

## SN74LS189AN (TI)

TTL 64-BIT (16x4) RAM WITH 3-STATE OUTPUT
- TOP VIEW -

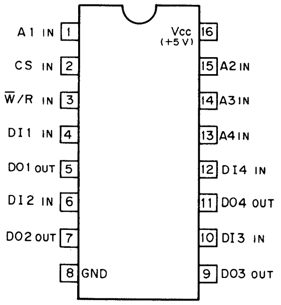
A1 IN 1
CS IN 2
W̄/R IN 3
DI1 IN 4
DO1 OUT 5
DI2 IN 6
DO2 OUT 7
8 GND
Vcc (+5V) 16
15 A2 IN
14 A3 IN
13 A4 IN
12 DI4 IN
11 DO4 OUT
10 DI3 IN
9 DO3 OUT

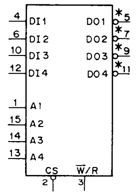
4 DI1
6 DI2
10 DI3
12 DI4
1 A1
15 A2
14 A3
13 A4
DO1 *5
DO2 *7
DO3 *9
DO4 *11
CS 2
W̄/R 3

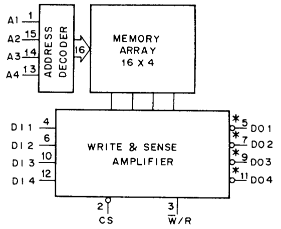
A1 1
A2 15
A3 14
A4 13
ADDRESS DECODER
16
MEMORY ARRAY 16 x 4
DI1 4
DI2 6
DI3 10
DI4 12
WRITE & SENSE AMPLIFIER
*5 DO1
*7 DO2
*9 DO3
*11 DO4
2 CS
3 W̄/R

DI1 to DI4 ; DATA INPUTS

DO1 to DO4 ; DATA OUTPUTS

A1 to A3 ; ADDRESS INPUT

CS ; CHIP SELECT INPUT

W̄/R ; WRITE/READ ENABLE IN

| CS | W̄/R | FUNCTION | OUTPUTS |
|---|---|---|---|
| 0 | 0 | WRITE | HIGH IMPEDANCE |
| 0 | 1 | READ | COMPLEMENT OF DATA ENTERED |
| 1 | X | INHIBIT | HIGH IMPEDANCE |

0; LOW LEVEL
1; HIGH LEVEL
X; DON'T CARE

## SN74LS290N (TI)

TTL DIVIDE-BY-2 AND DIVIDE-BY-5 COUNTER
- TOP VIEW -

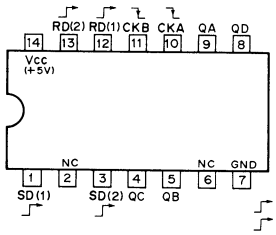
RD(2) 13
RD(1) 12
CKB 11
CKA 10
QA 9
QD 8
Vcc (+5V) 14
1 SD(1)
2 NC
3 SD(2)
4 QC
5 QB
6 NC
7 GND

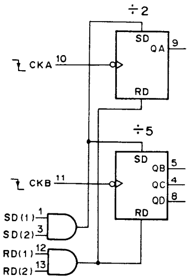
÷2
CKA 10
SD
QA 9
RD
÷5
CKB 11
SD
QB 5
QC 4
QD 8
RD
SD(1) 1
SD(2) 3
RD(1) 12
RD(2) 13

COUNT SEQUENCE

÷2 SECTION

| COUNT | QA |
|---|---|
| 0 | 0 |
| 1 | 1 |

÷5 SECTION

| COUNT | QD | QC | QB |
|---|---|---|---|
| 0 | 0 | 0 | 0 |
| 1 | 0 | 0 | 1 |
| 2 | 0 | 1 | 0 |
| 3 | 0 | 1 | 1 |
| 4 | 1 | 0 | 0 |

SET/RESET/COUNT FUNCTION

| SET/RESET IN | | | | OUTPUTS | | | |
|---|---|---|---|---|---|---|---|
| RD(1) | RD(2) | SD(1) | SD(2) | QD | QC | QB | QA |
| 1 | 1 | 0 | X | 0 | 0 | 0 | 0 |
| 1 | 1 | X | 0 | 0 | 0 | 0 | 0 |
| X | X | 1 | 1 | 1 | 0 | 0 | 1 |
| X | 0 | X | 0 | COUNT | | | |
| 0 | X | 0 | X | COUNT | | | |
| 0 | X | X | 0 | COUNT | | | |
| X | 0 | 0 | X | COUNT | | | |

## SN74LS221N (TI)

TTL MONOSTABLE MULTIVIBRATOR WITH SCHMITT TRIGGER INPUT
- TOP VIEW -

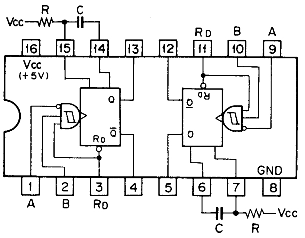
Vcc
R
C
RD
B
A
16
15
14
13
12
11
10
9
Vcc (+5V)
Q
Q̄
RD
GND
1
2
3
4
5
6
7
8
A
B
RD
C
R
Vcc

| INPUTS | | | OUTPUTS | |
|---|---|---|---|---|
| RD | A | B | Q | Q̄ |
| 0 | X | X | 0 | 1 |
| X | 1 | X | 0 | 1 |
| X | X | 0 | 0 | 1 |
| 1 | 0 | ↑ | ⎍ | ⊔ |
| 1 | ↓ | 1 | ⎍ | ⊔ |
| ↑ | 0 | 1 | ⎍ | ⊔ |

0; LOW LEVEL
1; HIGH LEVEL
X; DON'T CARE

OUTPUT PULSE WIDTH = 0.7CR

## 74F244PC (FSC)

TTL 3-STATE SCHMITT TRIGGER BUFFER/DRIVER
- TOP VIEW -

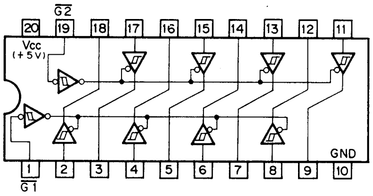
G̅2
20
19
18
17
16
15
14
13
12
11
Vcc (+5V)
GND
1
2
3
4
5
6
7
8
9
10
G̅1

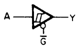

| G̅ | A | Y |
|---|---|---|
| 0 | 0 | 0 |
| 0 | 1 | 1 |
| 1 | X | HI-Z |

0; LOW LEVEL
1; HIGH LEVEL
X; DON'T CARE
HI-Z; HIGH IMPEDANCE

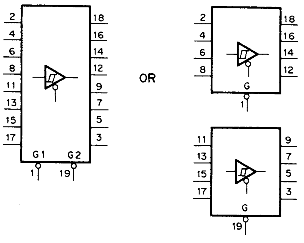
2
4
6
8
11
13
15
17
18
16
14
12
9
7
5
3
G1
G2
1
19
OR
2
4
6
8
18
16
14
12
G
1
11
13
15
17
9
7
5
3
G
19

## SN74AS534N (TI)

TTL D-TYPE EDGE-TRIGGERED FLIP-FLOPS WITH 3-STATE OUTPUTS
- TOP VIEW -

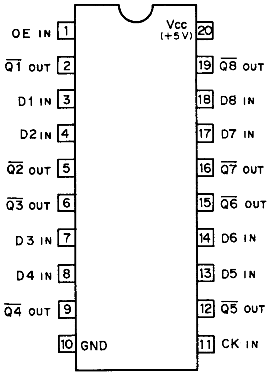
OE IN 1
Q̅1 OUT 2
D1 IN 3
D2 IN 4
Q̅2 OUT 5
Q̅3 OUT 6
D3 IN 7
D4 IN 8
Q̅4 OUT 9
10 GND
Vcc (+5V) 20
19 Q̅8 OUT
18 D8 IN
17 D7 IN
16 Q̅7 OUT
15 Q̅6 OUT
14 D6 IN
13 D5 IN
12 Q̅5 OUT
11 CK IN

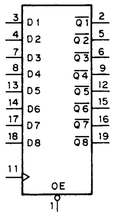
3 D1
4 D2
7 D3
8 D4
13 D5
14 D6
17 D7
18 D8
Q̅1 2
Q̅2 5
Q̅3 6
Q̅4 9
Q̅5 12
Q̅6 15
Q̅7 16
Q̅8 19
11
OE
1

| INPUTS | | | OUTPUT |
|---|---|---|---|
| OE | CK | D | Q̅ |
| 0 | ↑ | 1 | 0 |
| 0 | ↑ | 0 | 1 |
| 0 | 0 | X | Q̅o |
| 1 | X | X | HI-Z |

0 ; LOW LEVEL
1 ; HIGH LEVEL
X ; DON'T CARE
HI-Z ; HIGH IMPEDANCE

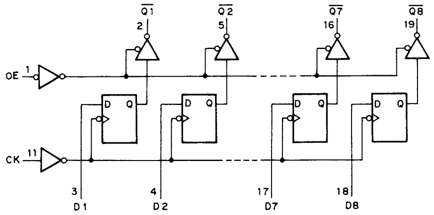
Q̅1
2
Q̅2
5
Q̅7
16
Q̅8
19
OE 1
CK 11
D
Q
3
D1
4
D2
17
D7
18
D8

SN74LS624N (TI)

TTL VOLTAGE CONTROLLED OSCILLATOR
- TOP VIEW -

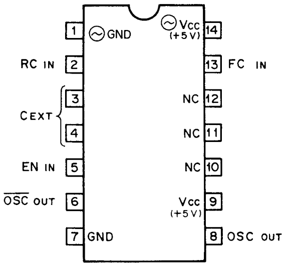
1 GND
2 RC IN
3, 4 CEXT
5 EN IN
6 $\overline{OSC}$ OUT
7 GND
8 OSC OUT
9 Vcc (+5V)
10 NC
11 NC
12 NC
13 FC IN
14 Vcc (+5V)

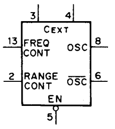
3
4
CEXT
13 FREQ CONT
OSC 8
2 RANGE CONT
$\overline{OSC}$ 6
EN
5

| EN | OSC | $\overline{OSC}$ |
|---|---|---|
| 0 | ENABLE | ENABLE |
| 1 | 0 | 1 |

0; LOW LEVEL
1; HIGH LEVEL

BA612 (ROHM)
M54516P (MITSUBISHI)

INVERTER WITH OPEN-COLLECTOR
(DARLINGTON-CONNECTED TRANSISTOR ARRAY)
- TOP VIEW -

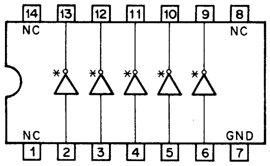
14 13 12 11 10 9 8
NC
NC
NC
GND
1 2 3 4 5 6 7

M54517P (MITSUBISHI)

INVERTER WITH OPEN-COLLECTOR
(DARLINGTON-CONNECTED TRANSISTOR ARRAY)
- TOP VIEW -

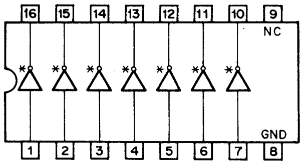
16 15 14 13 12 11 10 9
NC
GND
1 2 3 4 5 6 7 8

TC504013BP (TOSHIBA)

C-MOS D-TYPE FLIP FLOP WITH DIRECT SET/RESET
- TOP VIEW -

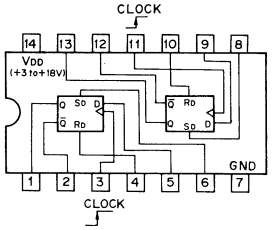
CLOCK
14 13 12 11 10 9 8
VDD (+3to+18V)
Q SD D
Q̄ RD
Q RD
Q̄ SD D
GND
1 2 3 4 5 6 7
CLOCK

DIRECT R-S FLIP FLOP

| SD | RD | Q | $\overline{Q}$ |
|---|---|---|---|
| 0 | 0 | Qn | $\overline{Qn}$ |
| 0 | 1 | 0 | 1 |
| 1 | 0 | 1 | 0 |
| 1 | 1 | 0 | 1 |

D-TYPE FLIP FLOP

| CKn | CKn+1 |
|---|---|
| D | Q |
| 0 | 0 |
| 1 | 1 |

CLOCK CK; ↑
CKn; BEFORE CLOCK
CKn+1; AFTER CLOCK
0; LOW LEVEL
1; HIGH LEVEL

MC14002BCP (MOTOROLA)

C-MOS 4-INPUT NOR GATE
- TOP VIEW -

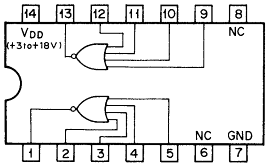
14 13 12 11 10 9 8
VDD (+3to18V)
NC
NC GND
1 2 3 4 5 6 7

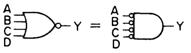
A B C D
Y =
A B C D
Y

$Y = \overline{A+B+C+D}$
$= \overline{A}\cdot\overline{B}\cdot\overline{C}\cdot\overline{D}$

| A | B | C | D | Y |
|---|---|---|---|---|
| 0 | 0 | 0 | 0 | 1 |
| X | X | X | 1 | 0 |
| X | X | 1 | X | 0 |
| X | 1 | X | X | 0 |
| 1 | X | X | X | 0 |

0; LOW LEVEL
1; HIGH LEVEL
X; DON'T CARE

MC14021BCP (MOTOROLA)

C-MOS ASYNCHRONOUS PARALLEL/SYNCHRONOUS SERIAL INPUT 8-BIT STATIC SHIFT REGISTER
- TOP VIEW -

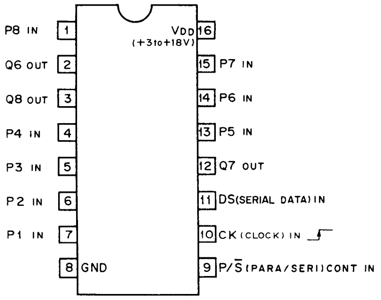
1 P8 IN
2 Q6 OUT
3 Q8 OUT
4 P4 IN
5 P3 IN
6 P2 IN
7 P1 IN
8 GND
9 P/$\overline{S}$ (PARA/SERI) CONT IN
10 CK (CLOCK) IN
11 DS (SERIAL DATA) IN
12 Q7 OUT
13 P5 IN
14 P6 IN
15 P7 IN
16 VDD (+3to+18V)

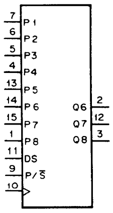
7 P1
6 P2
5 P3
4 P4
13 P5
14 P6
15 P7
1 P8
11 DS
9 P/$\overline{S}$
10
Q6 2
Q7 12
Q8 3

| tn | | | | tn + 1 | | | | | | | |
|---|---|---|---|---|---|---|---|---|---|---|---|
| INPUT | | | | INTERNAL OUTPUTS | | | | | OUTPUTS | | |
| P/$\overline{S}$ CONT | CK | P | DS | Q1 | Q2 | Q3 | Q4 | Q5 | Q6 | Q7 | Q8 |
| 1 | X | P1 ~ P8 | X | P1 | P2 | P3 | P4 | P5 | P6 | P7 | P8 |
| 0 | ↑ | X | 1 | 1 | Q1n | Q2n | Q3n | Q4n | Q5n | Q6n | Q7n |
| 0 | ↑ | X | 0 | 0 | Q1n | Q2n | Q3n | Q4n | Q5n | Q6n | Q7n |
| X | 0 | X | X | Q1n | Q2n | Q3n | Q4n | Q5n | Q6n | Q7n | Q8n |

0; LOW LEVEL X; DON'T CARE. tn; BEFORE CLOCK
1; HIGH LEVEL tn+1; AFTER CLOCK

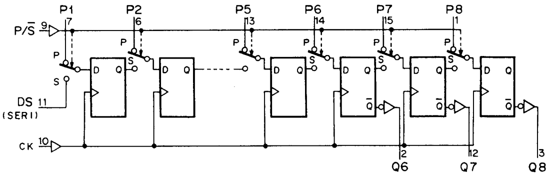
P1 P2 P5 P6 P7 P8
P/$\overline{S}$ 9
7 6 13 14 15 1
P S
DS 11 (SERI)
CK 10
D Q
Q̄
12 Q6
12 Q7
3 Q8

MC14046BCP (MOTOROLA)

C-MOS PHASE LOCKED LOOP
- TOP VIEW -

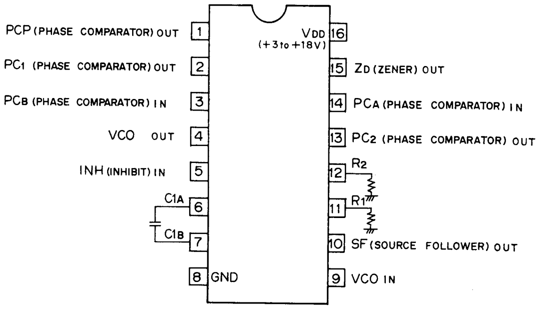
1 PCP (PHASE COMPARATOR) OUT
2 PC1 (PHASE COMPARATOR) OUT
3 PCB (PHASE COMPARATOR) IN
4 VCO OUT
5 INH (INHIBIT) IN
6 C1A
7 C1B
8 GND
9 VCO IN
10 SF (SOURCE FOLLOWER) OUT
11 R1
12 R2
13 PC2 (PHASE COMPARATOR) OUT
14 PCA (PHASE COMPARATOR) IN
15 ZD (ZENER) OUT
16 VDD (+3to+18V)

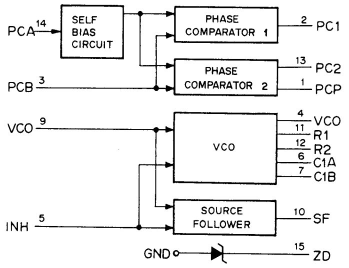
PCA 14
SELF BIAS CIRCUIT
PHASE COMPARATOR 1
2 PC1
PHASE COMPARATOR 2
13 PC2
1 PCP
PCB 3
VCO 9
VCO
4 VCO
11 R1
12 R2
6 C1A
7 C1B
INH 5
SOURCE FOLLOWER
10 SF
GND
15 ZD

## MC14051BCP (MOTOROLA)

C-MOS 8-CHANNEL MULTIPLEXER/DEMULTIPLEXER
– TOP VIEW –

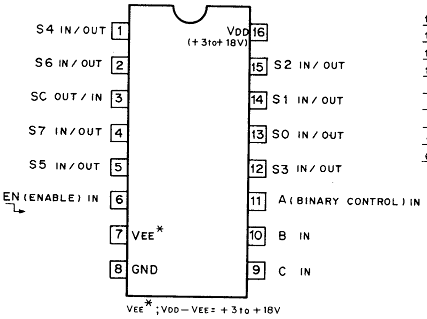
S4 IN/OUT 1
S6 IN/OUT 2
SC OUT/IN 3
S7 IN/OUT 4
S5 IN/OUT 5
EN (ENABLE) IN 6
7 VEE*
8 GND
VDD (+3 to +18V) 16
15 S2 IN/OUT
14 S1 IN/OUT
13 S0 IN/OUT
12 S3 IN/OUT
11 A (BINARY CONTROL) IN
10 B IN
9 C IN

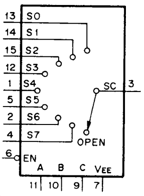
13 S0
14 S1
15 S2
12 S3
1 S4
5 S5
2 S6
4 S7
SC 3
OPEN
6 EN
A B C VEE
11 10 9 7

VEE*; VDD – VEE = +3 to +18V

| EN | C | B | A | "ON" CHANNEL |
|---|---|---|---|---|
| 0 | 0 | 0 | 0 | 0 |
| 0 | 0 | 0 | 1 | 1 |
| 0 | 0 | 1 | 0 | 2 |
| 0 | 0 | 1 | 1 | 3 |
| 0 | 1 | 0 | 0 | 4 |
| 0 | 1 | 0 | 1 | 5 |
| 0 | 1 | 1 | 0 | 6 |
| 0 | 1 | 1 | 1 | 7 |
| 1 | X | X | X | OPEN |

0; LOW LEVEL
1; HIGH LEVEL
X; DON'T CARE

## MC14052BCP (MOTOROLA)
## TC4052BPHB (TOSHIBA)

C-MOS 4-CHANNEL MULTIPLEXER/DEMULTIPLEXER
– TOP VIEW –

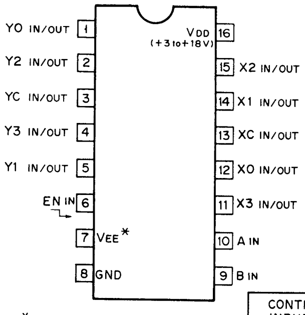
Y0 IN/OUT 1
Y2 IN/OUT 2
YC IN/OUT 3
Y3 IN/OUT 4
Y1 IN/OUT 5
EN IN 6
7 VEE*
8 GND
VDD (+3 to +18V) 16
15 X2 IN/OUT
14 X1 IN/OUT
13 XC IN/OUT
12 X0 IN/OUT
11 X3 IN/OUT
10 A IN
9 B IN

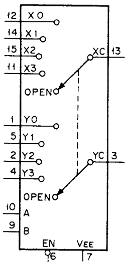
12 X0
14 X1
15 X2
11 X3
XC 13
OPEN
1 Y0
5 Y1
2 Y2
4 Y3
YC 3
OPEN
10 A
9 B
EN VEE
6 7

VEE*; VDD – VEE = +3 to +18V

| CONTROL INPUTS | | | "ON" CHANNEL |
|---|---|---|---|
| EN | B | A | |
| 0 | 0 | 0 | 0 |
| 0 | 0 | 1 | 1 |
| 0 | 1 | 0 | 2 |
| 0 | 1 | 1 | 3 |
| 1 | X | X | OPEN |

0; LOW LEVEL
1; HIGH LEVEL
X; DON'T CARE.

## MC14053BCP (MOTOROLA)

C-MOS TRIPLE 2-CHANNEL ANALOG MULTIPLEXER/DEMULTIPLEXER
– TOP VIEW –

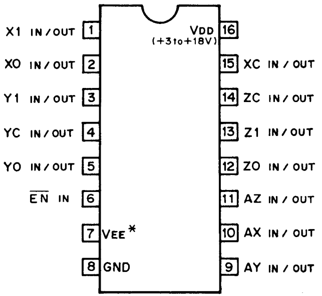
X1 IN/OUT 1
X0 IN/OUT 2
Y1 IN/OUT 3
YC IN/OUT 4
Y0 IN/OUT 5
EN IN 6
7 VEE*
8 GND
VDD (+3 to +18V) 16
15 XC IN/OUT
14 ZC IN/OUT
13 Z1 IN/OUT
12 Z0 IN/OUT
11 AZ IN/OUT
10 AX IN/OUT
9 AY IN/OUT

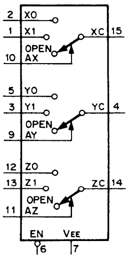
2 X0
1 X1
XC 15
OPEN
10 AX
5 Y0
3 Y1
YC 4
OPEN
9 AY
12 Z0
13 Z1
ZC 14
OPEN
11 AZ
EN VEE
6 7

VEE*; VDD – VEE = +3 to +18V

| CONT. INPUTS | | ON CHANNEL |
|---|---|---|
| EN | A (X,Y,Z,) | |
| 0 | 0 | 0 |
| 0 | 1 | 1 |
| 1 | X | OPEN |

0; LOW LEVEL
1; HIGH LEVEL
X; DON'T CARE.

## MC14070BCP (MOTOROLA)

C-MOS EXCLUSIVE OR GATE
– TOP VIEW –

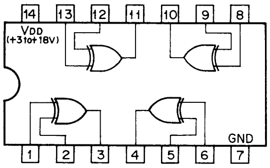
14 13 12 11 10 9 8
VDD (+3 to +18V)
GND
1 2 3 4 5 6 7

$Y = \bar{A} \cdot B + A \cdot \bar{B}$

| A | B | Y |
|---|---|---|
| 0 | 0 | 0 |
| 0 | 1 | 1 |
| 1 | 0 | 1 |
| 1 | 1 | 0 |

0; LOW LEVEL
1; HIGH LEVEL

## TC4071BP (TOSHIBA)

C-MOS 2-INPUT OR GATE
– TOP VIEW –

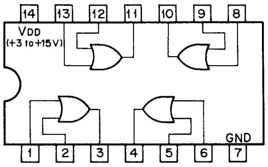
14 13 12 11 10 9 8
VDD (+3 to +15V)
GND
1 2 3 4 5 6 7

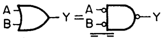

$Y = A + B = \overline{\bar{A} \cdot \bar{B}}$

| A | B | Y |
|---|---|---|
| 0 | 0 | 0 |
| 0 | 1 | 1 |
| 1 | 0 | 1 |
| 1 | 1 | 1 |

0; LOW LEVEL
1; HIGH LEVEL

MC14094BCP (MOTOROLA)
MSM4094RS (OKI)

C-MOS 8-STAGE SHIFT-AND-STORE BUS REGISTER
– TOP VIEW –

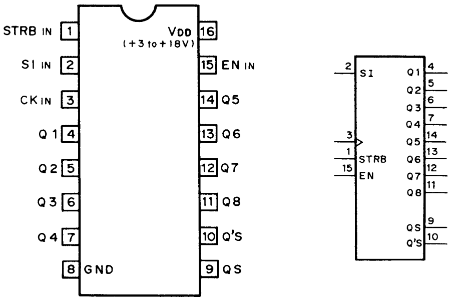
STRB IN 1
SI IN 2
CK IN 3
Q1 4
Q2 5
Q3 6
Q4 7
8 GND
VDD 16 (+3 to +18V)
15 EN IN
14 Q5
13 Q6
12 Q7
11 Q8
10 Q'S
9 QS
SI
STRB
EN
Q1
Q2
Q3
Q4
Q5
Q6
Q7
Q8
QS
Q'S

SI ; SERIAL DATA INPUT
CK ; CLOCK INPUT
STRB ; STROBE INPUT
EN ; OUTPUT ENABLE INPUT
Q1～Q8 ; PARALLEL DATA OUTPUTS
QS ,Q'S ; SERIAL DATA OUTPUTS

| INPUTS | | | | PARALLEL OUT | | SERIAL OUT | |
|---|---|---|---|---|---|---|---|
| CK | EN | STRB | SI | Q1 | Qn | QS | Q'S |
| ↑ | 0 | X | X | HI-Z | HI-Z | Q7 | NC |
| ↓ | 0 | X | X | HI-Z | HI-Z | NC | Q7 |
| ↑ | 1 | 0 | X | NC | NC | Q7 | NC |
| ↑ | 1 | 1 | 0 | 0 | Qn-1 | Q7 | NC |
| ↑ | 1 | 1 | 1 | 1 | Qn-1 | Q7 | NC |
| ↓ | 1 | 1 | 1 | NC | NC | NC | Q7 |

1 ; HIGH
0 ; LOW
X ; DON'T CARE

HI-Z ; HIGH IMPEDANCE
NC ; NO CHANGE

TC4538BP (TOSHIBA)

C-MOS DUAL RETRIGGERABLE／NON-RETRIGGERABLE MONOSTABLE MULTIVIBRATOR
– TOP VIEW –

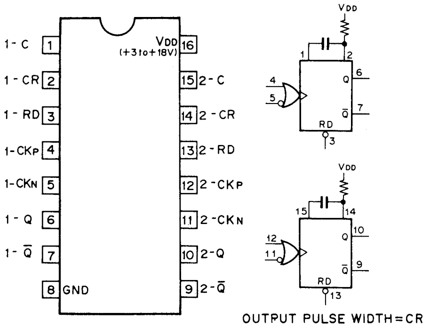
1-C 1
1-CR 2
1-RD 3
1-CKP 4
1-CKN 5
1-Q 6
1-Q̄ 7
8 GND
VDD 16 (+3 to +18V)
15 2-C
14 2-CR
13 2-RD
12 2-CKP
11 2-CKN
10 2-Q
9 2-Q̄
VDD
Q
Q̄
RD

OUTPUT PULSE WIDTH=CR

RETRIGGERABLE M.M.V

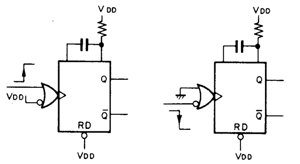

NON-RETRIGGERABLE M.M.V

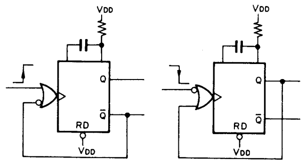

TC74HC00P (TOSHIBA)

C-MOS 2-INPUT NAND GATE
– TOP VIEW –

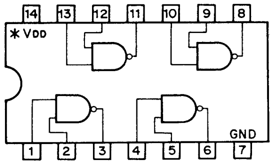

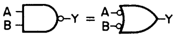

$Y = \overline{A \cdot B} = \overline{A} + \overline{B}$

| A | B | Y |
|---|---|---|
| 0 | 0 | 1 |
| 0 | 1 | 1 |
| 1 | 0 | 1 |
| 1 | 1 | 0 |

0; LOW LEVEL
1; HIGH LEVEL

*VDD AC, HC; +2 to +6V
HCT; +5V

TC74HC02P (TOSHIBA)

C-MOS 2-INPUT POSITIVE-NOR GATE
– TOP VIEW –

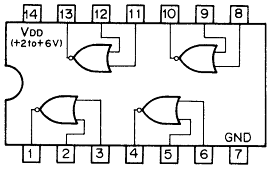
VDD (+2to+6V)
GND

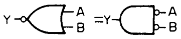

$Y = \overline{A + B} = \overline{A} \cdot \overline{B}$

| A | B | Y |
|---|---|---|
| 0 | 0 | 1 |
| 0 | 1 | 0 |
| 1 | 0 | 0 |
| 1 | 1 | 0 |

0: LOW LEVEL
1: HIGH LEVEL

TC74HC04P (TOSHIBA)

C-MOS INVERTER
– TOP VIEW –

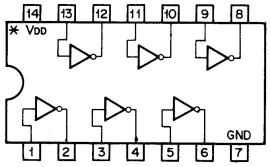

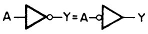

$Y = \overline{A}$

| A | Y |
|---|---|
| 0 | 1 |
| 1 | 0 |

0: LOW LEVEL
1: HIGH LEVEL

* VDD HC, HCU; +2to+6V
HCT; +5V

TC74HC08P (TOSHIBA)

C-MOS 2-INPUT AND GATE
– TOP VIEW –

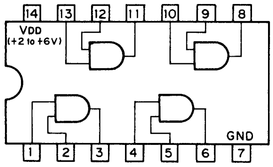
VDD (+2 to +6V)
GND

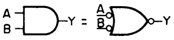

$Y = A \cdot B = \overline{\overline{A} + \overline{B}}$

| A | B | Y |
|---|---|---|
| 0 | 0 | 0 |
| 0 | 1 | 0 |
| 1 | 0 | 0 |
| 1 | 1 | 1 |

0; LOW LEVEL
1; HIGH LEVEL

TC74HC10P (TOSHIBA)

C-MOS 3-INPUT NAND GATE
– TOP VIEW –

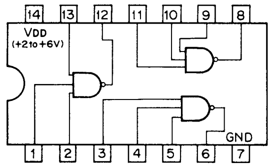
VDD (+2to+6V)
GND

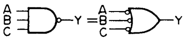

$Y = \overline{ABC} = \overline{A} + \overline{B} + \overline{C}$

| A | B | C | Y |
|---|---|---|---|
| 0 | 0 | 0 | 1 |
| 0 | 0 | 1 | 1 |
| 0 | 1 | 0 | 1 |
| 0 | 1 | 1 | 1 |
| 1 | 0 | 0 | 1 |
| 1 | 0 | 1 | 1 |
| 1 | 1 | 0 | 1 |
| 1 | 1 | 1 | 0 |

0 : LOW LEVEL
1 : HIGH LEVEL

TC74HC11P (TOSHIBA)

C-MOS 3-INPUT POSITIVE-AND GATE

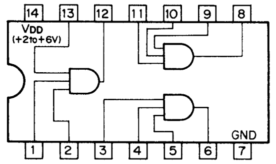
14
13
12
11
10
9
8
VDD
(+2to+6V)
GND
1
2
3
4
5
6
7

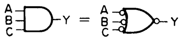

$Y = A \cdot B \cdot C = \overline{\overline{A}+\overline{B}+\overline{C}}$

| A | B | C | Y |
|---|---|---|---|
| 0 | 0 | 0 | 0 |
| 0 | 0 | 1 | 0 |
| 0 | 1 | 0 | 0 |
| 0 | 1 | 1 | 0 |
| 1 | 0 | 0 | 0 |
| 1 | 0 | 1 | 0 |
| 1 | 1 | 0 | 0 |
| 1 | 1 | 1 | 1 |

0;LOW LEVEL
1;HIGH LEVEL

MC74HC14N (MOTOROLA)
TC74HC14P (TOSHIBA)

C-MOS SCHMITT TRIGGER INVERTER
- TOP VIEW -

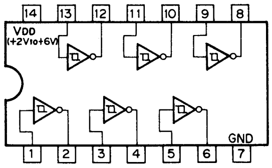
14
13
12
11
10
9
8
VDD
(+2Vto+6V)
GND
1
2
3
4
5
6
7

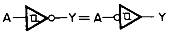

$Y = \overline{A}$

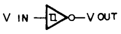

| A | Y |
|---|---|
| 0 | 1 |
| 1 | 0 |

0;LOW LEVEL
1;HIGH LEVEL

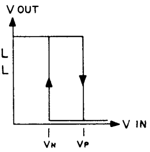

| VDD | VN | VP |
|---|---|---|
| 2.0V | 0.75V | 1.25V |
| 4.5V | 1.9V | 2.7V |
| 6.0V | 2.6V | 3.6V |

74AC32PC (FSC)
TC74HC32P (TOSHIBA)

C-MOS 2-INPUT OR GATE
- TOP VIEW -

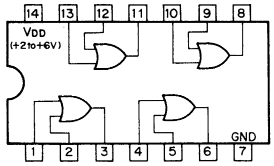
14
13
12
11
10
9
8
VDD
(+2to+6V)
GND
1
2
3
4
5
6
7

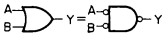

$Y = A+B = \overline{\overline{A} \cdot \overline{B}}$

| A | B | Y |
|---|---|---|
| 0 | 0 | 0 |
| 0 | 1 | 1 |
| 1 | 0 | 1 |
| 1 | 1 | 1 |

0;LOW LEVEL
1;HIGH LEVEL

MC74HC74N (MOTOROLA)
TC74HC74P (TOSHIBA)

C-MOS D-TYPE FLIP FLOP WITH DIRECT SET/RESET
- TOP VIEW -

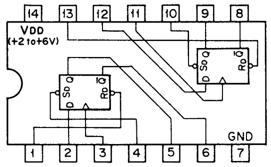
14
13
12
11
10
9
8
VDD
(+2to+6V)
SD
Q
D
Q
RD
GND
1
2
3
4
5
6
7

| INPUTS | | | | OUTPUTS | |
|---|---|---|---|---|---|
| $\overline{S_D}$ | $\overline{R_D}$ | CK | D | Qn+1 | $\overline{Qn+1}$ |
| 0 | 1 | X | X | 1 | 0 |
| 1 | 0 | X | X | 0 | 1 |
| 0 | 0 | X | X | 1 | 1 |
| 1 | 1 | ↑ | 1 | 1 | 0 |
| 1 | 1 | ↑ | 0 | 0 | 1 |
| 1 | 1 | 0 | X | Qn | $\overline{Qn}$ |

0;LOW LEVEL
1;HIGH LEVEL
X;DON'T CARE

TC74HC75P (TOSHIBA)

C-MOS 4-BIT D-TYPE LATCH
- TOP VIEW -

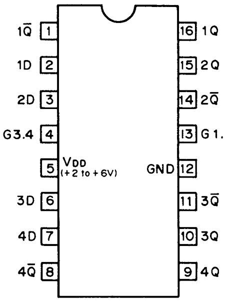
1Q̄ 1
1D 2
2D 3
G3.4 4
5 VDD (+2 to +6V)
3D 6
4D 7
4Q̄ 8
16 1Q
15 2Q
14 2Q̄
13 G1.2
GND 12
11 3Q̄
10 3Q
9 4Q

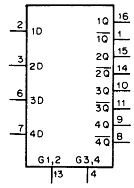
2 1D
3 2D
6 3D
7 4D
1Q 16
1Q̄ 1
2Q 15
2Q̄ 14
3Q 10
3Q̄ 11
4Q 9
4Q̄ 8
G1,2 13
G3,4 4

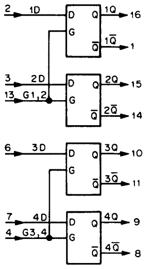
2 1D
3 2D
13 G1,2
6 3D
7 4D
4 G3,4
D
G
Q
Q̄
1Q 16
1Q̄ 1
2Q 15
2Q̄ 14
3Q 10
3Q̄ 11
4Q 9
4Q̄ 8

| INPUTS | | OUTPUTS | | FUNCTION |
|---|---|---|---|---|
| D | G | Q | $\overline{Q}$ | |
| 0 | 1 | 0 | 1 | - |
| 1 | 1 | 1 | 0 | - |
| X | 0 | Qn | $\overline{Qn}$ | LATCH |

0 ; LOW LEVEL
1 ; HIGH LEVEL
X ; DON'T CARE

TC74HC86P (TOSHIBA)

C-MOS EXCLUSIVE OR GATE
- TOP VIEW -

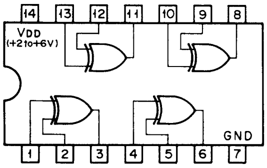
14
13
12
11
10
9
8
VDD
(+2to+6V)
GND
1
2
3
4
5
6
7

$Y = \overline{A} \cdot B + A \cdot \overline{B}$

| A | B | Y |
|---|---|---|
| 0 | 0 | 0 |
| 0 | 1 | 1 |
| 1 | 0 | 1 |
| 1 | 1 | 0 |

0;LOW LEVEL
1;HIGH LEVEL

MC74HC132N (MOTOROLA)

C-MOS 2-INPUT NAND SCHMITT TRIGGER
- TOP VIEW -

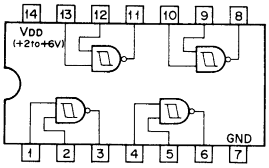
14
13
12
11
10
9
8
VDD
(+2to+6V)
GND
1
2
3
4
5
6
7

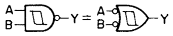

$Y = \overline{A \cdot B} = \overline{A} + \overline{B}$

| A | B | Y |
|---|---|---|
| 0 | 0 | 1 |
| 0 | 1 | 1 |
| 1 | 0 | 1 |
| 1 | 1 | 0 |

0 ; LOW LEVEL
1 ; HIGH LEVEL

74ACT138PC (FSC) ($V_{DD}=+5V$)
TC74HC138F (TOSHIBA) ($V_{DD}=+2$ to $+6V$) FLAT PACKAGE
TC74HC138P (TOSHIBA) ($V_{DD}=+2$ to $+6V$)

C-MOS 3-TO-8 LINE DECODER/DEMULTIPLEXER
- TOP VIEW -

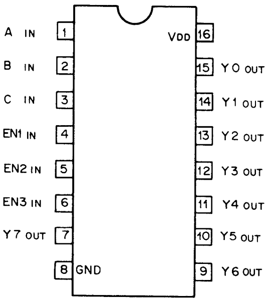
A IN 1
B IN 2
C IN 3
EN1 IN 4
EN2 IN 5
EN3 IN 6
Y7 OUT 7
8 GND
VDD 16
15 Y0 OUT
14 Y1 OUT
13 Y2 OUT
12 Y3 OUT
11 Y4 OUT
10 Y5 OUT
9 Y6 OUT

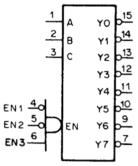
1 A
2 B
3 C
EN1 4
EN2 5
EN3 6
EN
Y0 15
Y1 14
Y2 13
Y3 12
Y4 11
Y5 10
Y6 9
Y7 7

| INPUTS | | | | OUTPUTS | | | | | | | |
|---|---|---|---|---|---|---|---|---|---|---|---|
| EN | C | B | A | Y7 | Y6 | Y5 | Y4 | Y3 | Y2 | Y1 | Y0 |
| 0 | X | X | X | 1 | 1 | 1 | 1 | 1 | 1 | 1 | 1 |
| 1 | 0 | 0 | 0 | 1 | 1 | 1 | 1 | 1 | 1 | 1 | 0 |
| 1 | 0 | 0 | 1 | 1 | 1 | 1 | 1 | 1 | 1 | 0 | 1 |
| 1 | 0 | 1 | 0 | 1 | 1 | 1 | 1 | 1 | 0 | 1 | 1 |
| 1 | 0 | 1 | 1 | 1 | 1 | 1 | 1 | 0 | 1 | 1 | 1 |
| 1 | 1 | 0 | 0 | 1 | 1 | 1 | 0 | 1 | 1 | 1 | 1 |
| 1 | 1 | 0 | 1 | 1 | 1 | 0 | 1 | 1 | 1 | 1 | 1 |
| 1 | 1 | 1 | 0 | 1 | 0 | 1 | 1 | 1 | 1 | 1 | 1 |
| 1 | 1 | 1 | 1 | 0 | 1 | 1 | 1 | 1 | 1 | 1 | 1 |

$EN=\overline{EN1}\cdot\overline{EN2}\cdot EN3$

0 ; LOW LEVEL
1 ; HIGH LEVEL
X ; DON'T CARE

TC74HC139P (TOSHIBA) ($V_{DD}=+2$ to $+6V$)

C-MOS 1-OF-4 DECODER/DEMULTIPLEXER
- TOP VIEW -

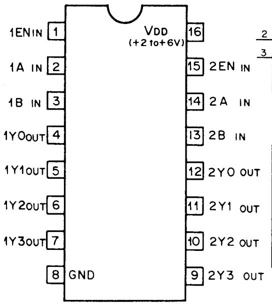
1EN IN 1
1A IN 2
1B IN 3
1Y0 OUT 4
1Y1 OUT 5
1Y2 OUT 6
1Y3 OUT 7
8 GND
VDD (+2 to +6V) 16
15 2EN IN
14 2A IN
13 2B IN
12 2Y0 OUT
11 2Y1 OUT
10 2Y2 OUT
9 2Y3 OUT

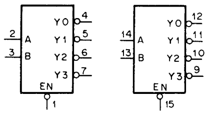
2 A
3 B
Y0 4
Y1 5
Y2 6
Y3 7
EN
1
14 A
13 B
Y0 12
Y1 11
Y2 10
Y3 9
EN
15

| INPUTS | | | OUTPUTS | | | |
|---|---|---|---|---|---|---|
| EN | B | A | Y3 | Y2 | Y1 | Y0 |
| 0 | 0 | 0 | 1 | 1 | 1 | 0 |
| 0 | 0 | 1 | 1 | 1 | 0 | 1 |
| 0 | 1 | 0 | 1 | 0 | 1 | 1 |
| 0 | 1 | 1 | 0 | 1 | 1 | 1 |
| 1 | X | X | 1 | 1 | 1 | 1 |

0 ; LOW LEVEL
1 ; HIGH LEVEL
X ; DON'T CARE

TC74HC151P (TOSHIBA) ($V_{DD}=+2$ to $+6V$)

C-MOS 8-LINE-TO-1-LINE DATA SELECTOR/MULTIPLEXER
- TOP VIEW -

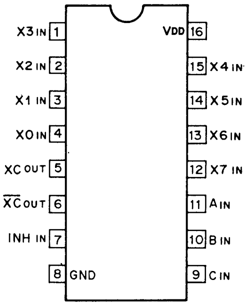
X3 IN 1
X2 IN 2
X1 IN 3
X0 IN 4
XC OUT 5
XC OUT 6
INH IN 7
8 GND
VDD 16
15 X4 IN
14 X5 IN
13 X6 IN
12 X7 IN
11 A IN
10 B IN
9 C IN

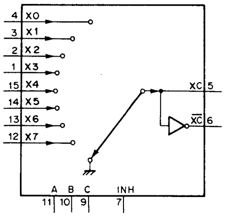
4 X0
3 X1
2 X2
1 X3
15 X4
14 X5
13 X6
12 X7
XC 5
XC 6
A B C
INH
11 10 9
7

| CONTROL INPUTS | | | | ON CHANNEL |
|---|---|---|---|---|
| INH | C | B | A | |
| 0 | 0 | 0 | 0 | 0 |
| 0 | 0 | 0 | 1 | 1 |
| 0 | 0 | 1 | 0 | 2 |
| 0 | 0 | 1 | 1 | 3 |
| 0 | 1 | 0 | 0 | 4 |
| 0 | 1 | 0 | 1 | 5 |
| 0 | 1 | 1 | 0 | 6 |
| 0 | 1 | 1 | 1 | 7 |
| 1 | X | X | X | GND |

0; LOW LEVEL
1; HIGH LEVEL
X; DON'T CARE

TC74HC153P (TOSHIBA)

C-MOS 4-LINE-TO-1-LINE DATA SELECTOR/MULTIPLEXER
- TOP VIEW -

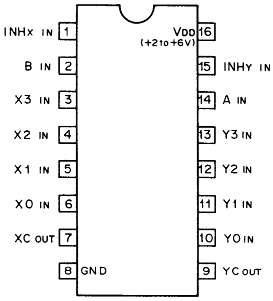
INHx IN 1
B IN 2
X3 IN 3
X2 IN 4
X1 IN 5
X0 IN 6
XC OUT 7
8 GND
VDD (+2 to +6V) 16
15 INHY IN
14 A IN
13 Y3 IN
12 Y2 IN
11 Y1 IN
10 Y0 IN
9 YC OUT

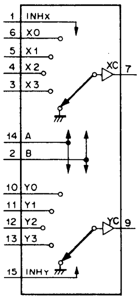
1 INHx
6 X0
5 X1
4 X2
3 X3
XC 7
14 A
2 B
10 Y0
11 Y1
12 Y2
13 Y3
YC 9
15 INHY

| CONTROL IN | | | ON CHANNEL |
|---|---|---|---|
| INH | B | A | |
| 0 | 0 | 0 | 0 |
| 0 | 0 | 1 | 1 |
| 0 | 1 | 0 | 2 |
| 0 | 1 | 1 | 3 |
| 1 | X | X | GND |

0; LOW LEVEL
1; HIGH LEVEL
X; DON'T CARE

TC74HC157P (TOSHIBA)

C-MOS 2-LINE-TO-1-LINE DATA SELECTOR/MULTIPLEXER
- TOP VIEW -

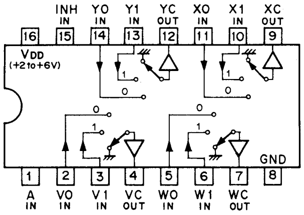
INH IN
Y0 IN
Y1 IN
YC OUT
X0 IN
X1 IN
XC OUT
16 15 14 13 12 11 10 9
VDD (+2 to +6V)
1 0
GND
1 2 3 4 5 6 7 8
A IN
V0 IN
V1 IN
VC OUT
W0 IN
W1 IN
WC OUT

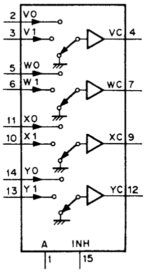
2 V0
3 V1
VC 4
5 W0
6 W1
WC 7
11 X0
10 X1
XC 9
14 Y0
13 Y1
YC 12
A INH
1 15

0; LOW LEVEL
1; HIGH LEVEL
X; DON'T CARE

| CONT. IN | | ON CHANNEL |
|---|---|---|
| INH | A | |
| 0 | 0 | 0 |
| 0 | 1 | 1 |
| 1 | X | GND |

## TC74HC161P (TOSHIBA) ($V_{DD}$ = +2 to +6V)

C-MOS SYNCHRONOUS PRESETTABLE 4-BIT BINARY COUNTER
- TOP VIEW -

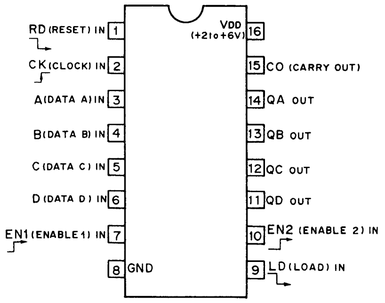
RD (RESET) IN 1
CK (CLOCK) IN 2
A (DATA A) IN 3
B (DATA B) IN 4
C (DATA C) IN 5
D (DATA D) IN 6
EN1 (ENABLE 1) IN 7
8 GND
VDD (+2 to +6V) 16
15 CO (CARRY OUT)
14 QA OUT
13 QB OUT
12 QC OUT
11 QD OUT
10 EN2 (ENABLE 2) IN
9 LD (LOAD) IN

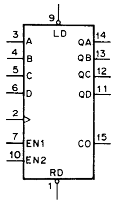
9
LD
3 A
4 B
5 C
6 D
2
7 EN1
10 EN2
QA 14
QB 13
QC 12
QD 11
CO 15
RD
1

MODE SELECTION

| CONTROL INPUTS | | | | MODE |
|---|---|---|---|---|
| RD | LD | EN1 | EN2 | |
| 0 | X | X | X | RESET (ASYNCHRONOUS) |
| 1 | 0 | X | X | PRESET (SYNCHRONOUS) |
| 1 | 1 | 0 | X | NO COUNT |
| 1 | 1 | X | 0 | NO COUNT |
| 1 | 1 | 1 | 1 | COUNT |

0; LOW LEVEL
1; HIGH LEVEL
X; DON'T CARE

COUNT SEQUENCE

| COUNT | OUTPUTS | | | |
|---|---|---|---|---|
| | QD | QC | QB | QA |
| 0 | 0 | 0 | 0 | 0 |
| 1 | 0 | 0 | 0 | 1 |
| 2 | 0 | 0 | 1 | 0 |
| 3 | 0 | 0 | 1 | 1 |
| 4 | 0 | 1 | 0 | 0 |
| 5 | 0 | 1 | 0 | 1 |
| 6 | 0 | 1 | 1 | 0 |
| 7 | 0 | 1 | 1 | 1 |
| 8 | 1 | 0 | 0 | 0 |
| 9 | 1 | 0 | 0 | 1 |
| 10 | 1 | 0 | 1 | 0 |
| 11 | 1 | 0 | 1 | 1 |
| 12 | 1 | 1 | 0 | 0 |
| 13 | 1 | 1 | 0 | 1 |
| 14 | 1 | 1 | 1 | 0 |
| 15 | 1 | 1 | 1 | 1 |

CARRY OUTPUT "CO"

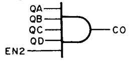
QA
QB
QC
QD
EN2
CO

CO IS HIGH WHEN EN2 INPUT IS HIGH AND COUNT IS "15".

## TC74HC163P (TOSHIBA) ($V_{DD}$ = +2 to +6V)

C-MOS PRESETTABLE SYNCHRONOUS 4-BIT BINARY COUNTER
- TOP VIEW -

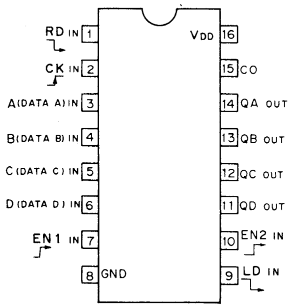
RD IN 1
CK IN 2
A (DATA A) IN 3
B (DATA B) IN 4
C (DATA C) IN 5
D (DATA D) IN 6
EN 1 IN 7
8 GND
VDD 16
15 CO
14 QA OUT
13 QB OUT
12 QC OUT
11 QD OUT
10 EN2 IN
9 LD IN

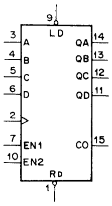
9
LD
3 A
4 B
5 C
6 D
2
7 EN1
10 EN2
QA 14
QB 13
QC 12
QD 11
CO 15
RD
1

MODE SELECTION

| CONTROL INPUTS | | | | MODE |
|---|---|---|---|---|
| RD | LD | EN1 | EN2 | |
| 0 | X | X | X | RESET (SYNCHRONOUS) |
| 1 | 0 | X | X | PRESET (SYNCHRONOUS) |
| 1 | 1 | 0 | X | NO COUNT |
| 1 | 1 | X | 0 | NO COUNT |
| 1 | 1 | 1 | 1 | COUNT |

CARRY OUTPUT "CO"

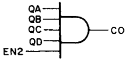
QA
QB
QC
QD
EN2
CO

CO IS HIGH WHEN EN2 INPUT IS HIGH AND COUNT IS "15".

COUNT SEQUENCE

| COUNT | OUTPUTS | | | |
|---|---|---|---|---|
| | QD | QC | QB | QA |
| 0 | 0 | 0 | 0 | 0 |
| 1 | 0 | 0 | 0 | 1 |
| 2 | 0 | 0 | 1 | 0 |
| 3 | 0 | 0 | 1 | 1 |
| 4 | 0 | 1 | 0 | 0 |
| 5 | 0 | 1 | 0 | 1 |
| 6 | 0 | 1 | 1 | 0 |
| 7 | 0 | 1 | 1 | 1 |
| 8 | 1 | 0 | 0 | 0 |
| 9 | 1 | 0 | 0 | 1 |
| 10 | 1 | 0 | 1 | 0 |
| 11 | 1 | 0 | 1 | 1 |
| 12 | 1 | 1 | 0 | 0 |
| 13 | 1 | 1 | 0 | 1 |
| 14 | 1 | 1 | 1 | 0 |
| 15 | 1 | 1 | 1 | 1 |

## TC74HC162P (TOSHIBA)

C-MOS PRESETTABLE SYNCHRONOUS 4-BIT BCD COUNTER
- TOP VIEW -

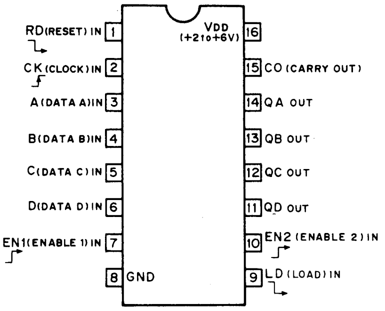
RD (RESET) IN 1
CK (CLOCK) IN 2
A (DATA A) IN 3
B (DATA B) IN 4
C (DATA C) IN 5
D (DATA D) IN 6
EN1 (ENABLE 1) IN 7
8 GND
VDD (+2 to +6V) 16
15 CO (CARRY OUT)
14 QA OUT
13 QB OUT
12 QC OUT
11 QD OUT
10 EN2 (ENABLE 2) IN
9 LD (LOAD) IN

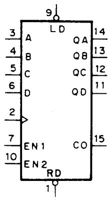
9
LD
3 A
4 B
5 C
6 D
2
7 EN1
10 EN2
QA 14
QB 13
QC 12
QD 11
CO 15
RD
1

MODE SELECTION

| INPUTS | | | | | MODE |
|---|---|---|---|---|---|
| CK | RD | LD | EN1 | EN2 | |
| ↑ | 0 | X | X | X | RESET |
| ↑ | 1 | 0 | X | X | PRESET |
| ↑ | 1 | 1 | 0 | X | NO COUNT |
| ↑ | 1 | 1 | X | 0 | NO COUNT |
| ↑ | 1 | 1 | 1 | 1 | COUNT |

COUNT SEQUENCE

| COUNT | OUTPUTS | | | | |
|---|---|---|---|---|---|
| | QD | QC | QB | QA | CO |
| 0 | 0 | 0 | 0 | 0 | 0 |
| 1 | 0 | 0 | 0 | 1 | 0 |
| 2 | 0 | 0 | 1 | 0 | 0 |
| 3 | 0 | 0 | 1 | 1 | 0 |
| 4 | 0 | 1 | 0 | 0 | 0 |
| 5 | 0 | 1 | 0 | 1 | 0 |
| 6 | 0 | 1 | 1 | 0 | 0 |
| 7 | 0 | 1 | 1 | 1 | 0 |
| 8 | 1 | 0 | 0 | 0 | 0 |
| 9 | 1 | 0 | 0 | 1 | 1 |

0 ; LOW LEVEL
1 ; HIGH LEVEL
X ; DON'T CARE

CARRY OUTPUT "CO"

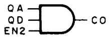

CO IS HIGH WHEN EN2 INPUT IS HIGH AND COUNT IS "9".

## TC74HC165P (TOSHIBA)

C-MOS SERIAL- OR PARALLEL-INPUT SHIFT REGISTER
- TOP VIEW -

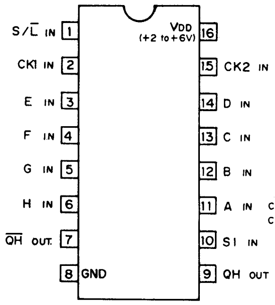
S/L IN 1
CK1 IN 2
E IN 3
F IN 4
G IN 5
H IN 6
QH OUT 7
8 GND
VDD (+2 to +6V) 16
15 CK2 IN
14 D IN
13 C IN
12 B IN
11 A IN
10 SI IN
9 QH OUT

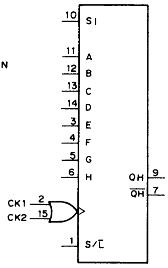
10 SI
11 A
12 B
13 C
14 D
3 E
4 F
5 G
6 H
CK1 2
CK2 15
1 S/L
QH 9
QH 7

SI ; SERIAL DATA IN
A–H ; PARALLEL DATA IN
CK1, CK2 ; CLOCK IN (↑)
$S/\overline{L}$ ; SHIFT/LOAD IN
QH $\overline{QH}$ ; 8th BIT OUT (COMPLEMENTALY)

| INPUTS | | | | CONTENTS | | OUTPUT | OPERATION |
|---|---|---|---|---|---|---|---|
| $S/\overline{L}$ | CK1+CK2 | SI | A·······H | QA | QB···· | QH | |
| 0 | X | X | a·······h | a | b····· | h | PARALLEL LOAD |
| 1 | ↑ | 0 | X | 0 | QAo··· | QGo | RIGHT SHIFT |
| 1 | ↑ | 1 | X | 1 | QAo··· | QGo | |
| 1 | ↓ | X | X | QAo | QBo··· | QHo | NO COUNT |
| 1 | 0 | X | X | QAo | QBo··· | QHo | |
| 1 | 1 | X | X | QAo | QBo··· | QHo | |

0 ; LOW LEVEL 1 ; HIGH LEVEL X ; DON'T CARE
a – h ; LEVEL OF INPUTS A–H
QAo–QHo ; LEVEL OF QA–QH BEFORE THE INDICATED INPUT CONDITIONS WERE ESTABLISHED

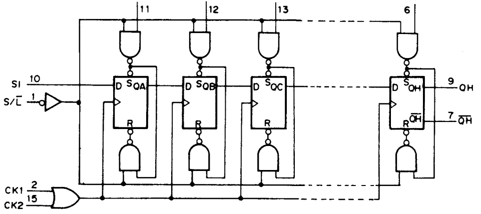
A
11
B
12
C
13
H
6
SI 10
S/L 1
D S QA
D S QB
D S QC
D S QH
R
QH
9 QH
7 QH
CK1 2
CK2 15

MC74HC174N (MOTOROLA)
TC74HC174P (TOSHIBA)

C-MOS D-TYPE FLIP-FLOP WITH RESET
- TOP VIEW -

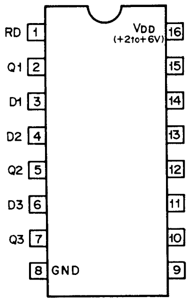
RD 1
Q1 2
D1 3
D2 4
Q2 5
D3 6
Q3 7
8 GND
VDD (+2to+6V) 16
15 Q6
14 D6
13 D5
12 Q5
11 D4
10 Q4
9 CK

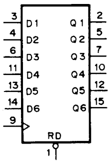
3 D1
4 D2
6 D3
11 D4
13 D5
14 D6
9
Q1 2
Q2 5
Q3 7
Q4 10
Q5 12
Q6 15
RD
1

EACH FLIP - FLOP

| INPUT | | | OUT |
|---|---|---|---|
| RD | CK | D | Q |
| 0 | X | X | 0 |
| 1 | ↑ | 0 | 0 |
| 1 | ↑ | 1 | 1 |
| 1 | 0 | X | Qo |

0; LOW LEVEL
1; HIGH LEVEL
X; DON'T CARE

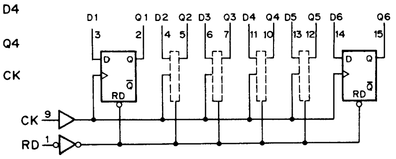
D1 Q1 D2 Q2 D3 Q3 D4 Q4 D5 Q5 D6 Q6
3 2 4 5 6 7 11 10 13 12 14 15
D Q
RD
CK 9
RD 1

TC74HC175P (TOSHIBA) ($V_{DD} = +2$ to $+6V$)

C-MOS D-TYPE FLIP-FLOP WITH RESET
- TOP VIEW -

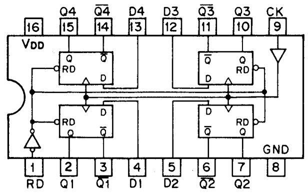
Q4 Q̄4 D4 D3 Q̄3 Q3 CK
16 15 14 13 12 11 10 9
VDD
GND
1 2 3 4 5 6 7 8
RD Q1 Q̄1 D1 D2 Q̄2 Q2

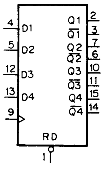
4 D1
5 D2
12 D3
13 D4
9
Q1 2
Q̄1 3
Q2 7
Q̄2 6
Q3 10
Q̄3 11
Q4 15
Q̄4 14
RD
1

| RD | CK | D | Q | Q̄ |
|---|---|---|---|---|
| 0 | X | X | 0 | 1 |
| 1 | ↑ | 1 | 1 | 0 |
| 1 | ↑ | 0 | 0 | 1 |
| 1 | 0 | X | Qo | Q̄o |

0 ; LOW LEVEL
1 ; HIGH LEVEL
X ; DON'T CARE
Qo ; NO CHANGE
Q̄o ; NO CHANGE

SN74HC191N (TI)

C-MOS PRESETTABLE SYNCHRONOUS
4-BIT BINARY UP/DOWN COUNTER
- TOP VIEW -

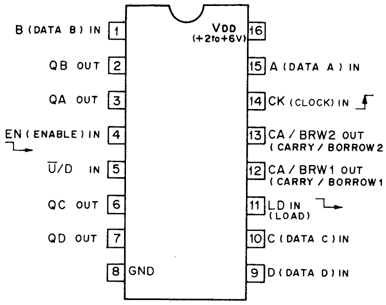
B (DATA B) IN 1
QB OUT 2
QA OUT 3
EN (ENABLE) IN 4
Ū/D IN 5
QC OUT 6
QD OUT 7
8 GND
VDD (+2to+6V) 16
15 A (DATA A) IN
14 CK (CLOCK) IN
13 CA / BRW2 OUT (CARRY / BORROW 2)
12 CA / BRW1 OUT (CARRY / BORROW 1)
11 LD IN (LOAD)
10 C (DATA C) IN
9 D (DATA D) IN

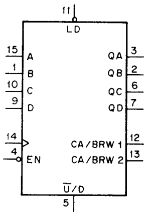
11
LD
15 A
1 B
10 C
9 D
14
4 EN
QA 3
QB 2
QC 6
QD 7
CA/BRW1 12
CA/BRW2 13
Ū/D
5

MODE SELECTION

| CONTROL INPUTS | | | MODE |
|---|---|---|---|
| LD | EN | Ū/D | |
| 0 | X | X | PRESET (ASYNCHRONOUS) |
| 1 | 1 | X | NO COUNT |
| 1 | 0 | 0 | UP COUNT |
| 1 | 0 | 1 | DOWN COUNT |

0; LOW LEVEL
1; HIGH LEVEL
X; DON'T CARE.

COUNT SEQUENCE

| COUNT | OUTPUTS | | | |
|---|---|---|---|---|
| | QD | QC | QB | QA |
| 0 | 0 | 0 | 0 | 0 |
| 1 | 0 | 0 | 0 | 1 |
| 2 | 0 | 0 | 1 | 0 |
| 3 | 0 | 0 | 1 | 1 |
| 4 | 0 | 1 | 0 | 0 |
| 5 | 0 | 1 | 0 | 1 |
| 6 | 0 | 1 | 1 | 0 |
| 7 | 0 | 1 | 1 | 1 |
| 8 | 1 | 0 | 0 | 0 |
| 9 | 1 | 0 | 0 | 1 |
| 10 | 1 | 0 | 1 | 0 |
| 11 | 1 | 0 | 1 | 1 |
| 12 | 1 | 1 | 0 | 0 |
| 13 | 1 | 1 | 0 | 1 |
| 14 | 1 | 1 | 1 | 0 |
| 15 | 1 | 1 | 1 | 1 |

↑ UP COUNT
↓ DOWN COUNT

CA / BRW OUTPUTS

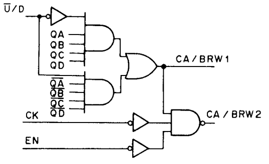
Ū/D
QA
QB
QC
QD
Q̄A
Q̄B
Q̄C
Q̄D
CA / BRW1
CK
CA / BRW2
EN

CA/BRW1 OUTPUT IS HIGH WHEN COUNT IS "15" AT UP-COUNT OR WHEN COUNT IS "0" AT DOWN COUNT.

CA/BRW2 OUTPUT IS LOW WHEN BOTH THE CLOCK AND EN INPUTS ARE LOW AND CA/BRW1 OUTPUT IS HIGH.

TC74HC221P (TOSHIBA)

C-MOS MONOSTABLE MULTIVIBRATOR
WITH SCHMITT TRIGGER INPUT
- TOP VIEW -

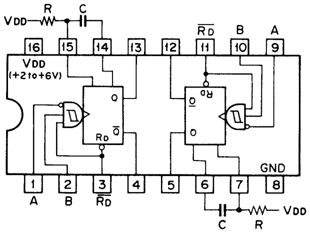
R C
VDD
R̄D B A
16 15 14 13 12 11 10 9
VDD (+2to+6V)
Q
RD
GND
1 2 3 4 5 6 7 8
A B R̄D
C R
VDD

| INPUTS | | | OUTPUTS | |
|---|---|---|---|---|
| R̄D | A | B | Q | Q̄ |
| 0 | X | X | 0 | 1 |
| X | 1 | X | 0 | 1 |
| X | X | 0 | 0 | 1 |
| 1 | 0 | ↑ | ⊓ | ⊔ |
| 1 | ↓ | 1 | ⊓ | ⊔ |
| ↑ | 0 | 1 | ⊓ | ⊔ |

0; LOW LEVEL
1; HIGH LEVEL
X; DON'T CARE

OUTPUT PULSE WIDTH = 0.7CR

TC74HC240P (TOSHIBA) ($V_{DD} = +2$ to $+6V$)

C-MOS 3-STATE INVERTER/LINE DRIVER
- TOP VIEW -

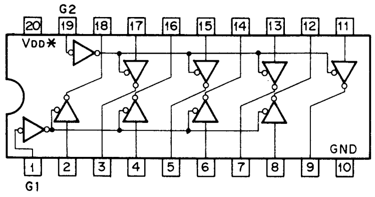
G2
20 19 18 17 16 15 14 13 12 11
VDD*
GND
1 2 3 4 5 6 7 8 9 10
G1

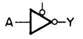

| G | A | Y |
|---|---|---|
| 0 | 0 | 1 |
| 0 | 1 | 0 |
| 1 | X | HI-Z |

0; LOW LEVEL
1; HIGH LEVEL
X; DON'T CARE
HI-Z; HIGH IMPEDANCE

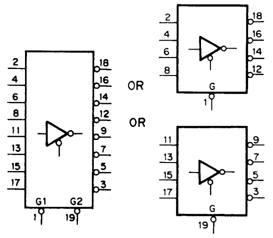
2 4 6 8 11 13 15 17
18 16 14 12 9 7 5 3
G1 G2
1 19
OR
OR
G
1
G
19

74AC244PC (FSC) ($V_{DD} = +2$ to $+6V$)
TC74HC244P (TOSHIBA) ($V_{DD} = +2$ to $+6V$)

C-MOS BUS BUFFER WITH 3-STATE OUTPUTS
- TOP VIEW -

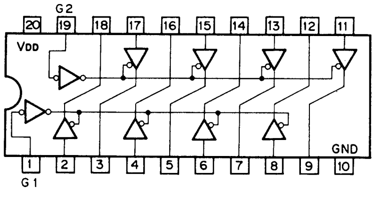
G2
20 19 18 17 16 15 14 13 12 11
VDD
GND
1 2 3 4 5 6 7 8 9 10
G1

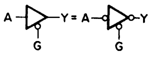

| G | A | Y |
|---|---|---|
| 0 | 0 | 0 |
| 0 | 1 | 1 |
| 1 | X | HI-Z |

0; LOW LEVEL
1; HIGH LEVEL
X; DON'T CARE
HI-Z; HIGH IMPEDANCE

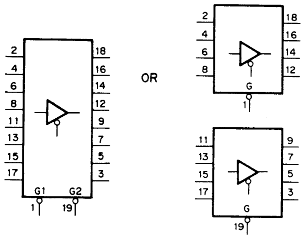
2 4 6 8 11 13 15 17
18 16 14 12 9 7 5 3
G1 G2
1 19
OR
G
1
G
19

### 74ACT245PC (FSC) ($V_{DD} = +5V$)
### TC74HC245P (TOSHIBA) ($V_{DD} = +2$ to $+6V$)

C-MOS BILATERAL BUS TRANSCEIVERS WITH 3-STATE OUTPUTS
- TOP VIEW -

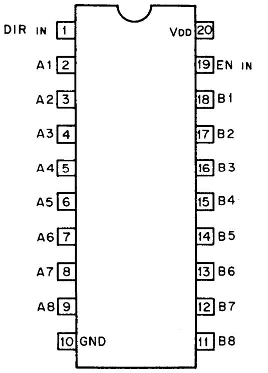
DIR IN 1
A1 2
A2 3
A3 4
A4 5
A5 6
A6 7
A7 8
A8 9
10 GND
VDD 20
19 EN IN
18 B1
17 B2
16 B3
15 B4
14 B5
13 B6
12 B7
11 B8

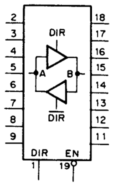
2 3 4 5 6 7 8 9
18 17 16 15 14 13 12 11
DIR
A
B
DIR
DIR EN
1 19

| EN | DIR | OPERATION |
|---|---|---|
| 0 | 0 | B to A |
| 0 | 1 | A to B |
| 1 | X | HI - Z |

0; LOW LEVEL
1; HIGH LEVEL
X; DON'T CARE
HI-Z; HIGH IMPEDANCE

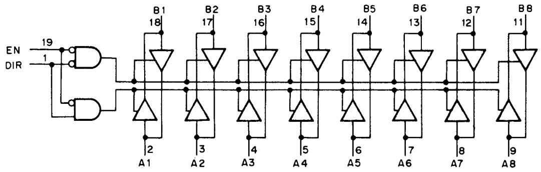
EN 19
DIR 1
B1 18
B2 17
B3 16
B4 15
B5 14
B6 13
B7 12
B8 11
2 A1
3 A2
4 A3
5 A4
6 A5
7 A6
8 A7
9 A8

### TC74HC367P (TOSHIBA)

C-MOS BUS DRIVER WITH 3-STATE OUTPUTS
- TOP VIEW -

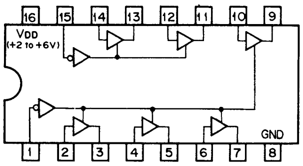
16 15 14 13 12 11 10 9
VDD
(+2 to +6V)
GND
1 2 3 4 5 6 7 8

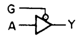

| G | A | Y |
|---|---|---|
| 0 | 0 | 0 |
| 0 | 1 | 1 |
| 1 | X | HI-Z |

0; LOW LEVEL
1; HIGH LEVEL
X; DON'T CARE
HI-Z; HIGH IMPEDANCE

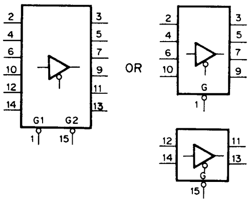
2 4 6 10 12 14
3 5 7 9 11 13
G1 G2
1 15
OR
2 4 6 10
3 5 7 9
G
1
12 14
11 13
G
15

### TC74HC368P (TOSHIBA)

C-MOS BUS INVERTER WITH 3-STATE OUTPUTS
- TOP VIEW -

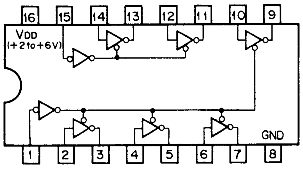
16 15 14 13 12 11 10 9
VDD
(+2to+6V)
GND
1 2 3 4 5 6 7 8

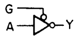

| G | A | Y |
|---|---|---|
| 0 | 0 | 1 |
| 0 | 1 | 0 |
| 1 | X | HI-Z |

0; LOW LEVEL
1; HIGH LEVEL
X; DON'T CARE
HI-Z; HIGH IMPEDANCE

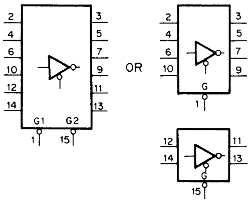
2 4 6 10 12 14
3 5 7 9 11 13
G1 G2
1 15
OR
2 4 6 10
3 5 7 9
G
1
12 14
11 13
G
15

### TC74HC257P (TOSHIBA) ($V_{DD} = +2$ to $+6V$)

C-MOS 2-LINE-TO-1-LINE DATA SELECTOR/MULTIPLEXER
- TOP VIEW -

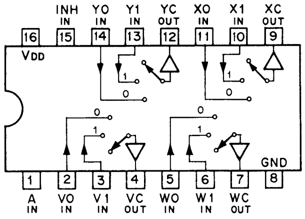
INH IN
YO IN
Y1 IN
YC OUT
XO IN
X1 IN
XC OUT
16 15 14 13 12 11 10 9
VDD
GND
1 2 3 4 5 6 7 8
A IN
VO IN
V1 IN
VC OUT
WO IN
W1 IN
WC OUT

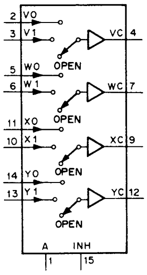
2 VO
3 V1
VC 4
5 WO
6 W1
OPEN
WC 7
11 XO
10 X1
OPEN
XC 9
14 YO
13 Y1
OPEN
YC 12
OPEN
A INH
1 15

0; LOW LEVEL
1; HIGH LEVEL
X; DON'T CARE

| CONT. IN | | ON CHANNEL |
|---|---|---|
| INH | A | |
| 0 | 0 | 0 |
| 0 | 1 | 1 |
| 1 | X | OPEN |

### TC74HC273F (TOSHIBA) FLAT PACKAGE

C-MOS D-TYPE FLIP-FLOP WITH RESET
- TOP VIEW -

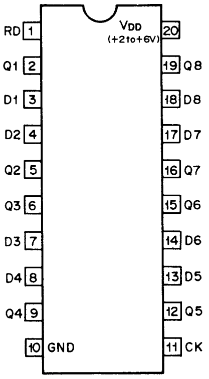
RD 1
Q1 2
D1 3
D2 4
Q2 5
Q3 6
D3 7
D4 8
Q4 9
10 GND
VDD
(+2to+6V)
20
19 Q8
18 D8
17 D7
16 Q7
15 Q6
14 D6
13 D5
12 Q5
11 CK

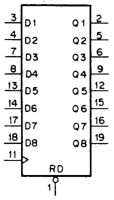
3 D1 Q1 2
4 D2 Q2 5
7 D3 Q3 6
8 D4 Q4 9
13 D5 Q5 12
14 D6 Q6 15
17 D7 Q7 16
18 D8 Q8 19
11
RD
1

EACH FLIP - FLOP

| INPUT | | | OUT |
|---|---|---|---|
| RD | CK | D | Q |
| 0 | X | X | 0 |
| 1 | ↑ | 0 | 0 |
| 1 | ↑ | 1 | 1 |
| 1 | 0 | X | Qo |

0; LOW LEVEL
1; HIGH LEVEL
X; DON'T CARE

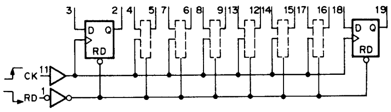
3 2 4 5 7 6 8 9 13 12 14 15 17 16 18 19
D Q
RD
CK 11
RD 1

### TC74HC373P (TOSHIBA) ($V_{DD} = +2$ to $+6V$)

C-MOS 3-STATE OUTPUTS OCTAL LATCHES
- TOP VIEW -

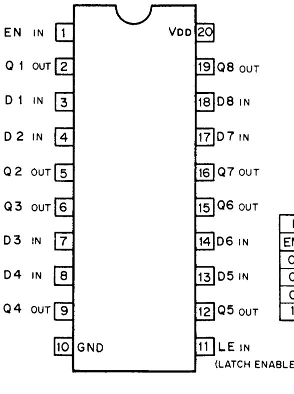
EN IN 1
Q1 OUT 2
D1 IN 3
D2 IN 4
Q2 OUT 5
Q3 OUT 6
D3 IN 7
D4 IN 8
Q4 OUT 9
10 GND
VDD 20
19 Q8 OUT
18 D8 IN
17 D7 IN
16 Q7 OUT
15 Q6 OUT
14 D6 IN
13 D5 IN
12 Q5 OUT
11 LE IN
(LATCH ENABLE)

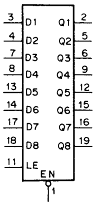
3 D1 Q1 2
4 D2 Q2 5
7 D3 Q3 6
8 D4 Q4 9
13 D5 Q5 12
14 D6 Q6 15
17 D7 Q7 16
18 D8 Q8 19
11 LE
EN
1

| INPUTS | | | OUT |
|---|---|---|---|
| EN | D | LE | Q |
| 0 | 1 | 1 | 1 |
| 0 | 0 | 1 | 0 |
| 0 | X | 0 | Qo |
| 1 | X | X | HI-Z |

HI-Z;
HIGH IMPEDANCE
0; LOW LEVEL
1; HIGH LEVEL
X; DON'T CARE

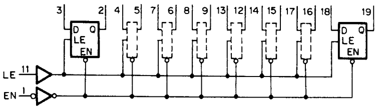
3 2 4 5 7 6 8 9 13 12 14 15 17 16 18 19
D Q
LE
EN
LE 11
EN 1

### TC74HC374P (TOSHIBA) ($V_{DD}$; +2 to +6V)

C-MOS 3-STATE OCTAL D-TYPE FLIP-FLOP
– TOP VIEW –

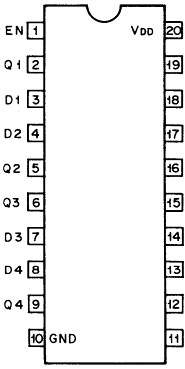
EN 1
Q1 2
D1 3
D2 4
Q2 5
Q3 6
D3 7
D4 8
Q4 9
10 GND
VDD 20
19 Q8
18 D8
17 D7
16 Q7
15 Q6
14 D6
13 D5
12 Q5
11 CK

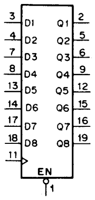
D1 D2 D3 D4 D5 D6 D7 D8
Q1 Q2 Q3 Q4 Q5 Q6 Q7 Q8
EN

| INPUTS | | | OUT |
|---|---|---|---|
| EN | D | CK | Q |
| 0 | 1 | ↑ | 1 |
| 0 | 0 | ↑ | 0 |
| 0 | X | 0 | Qo |
| 1 | X | X | HI-Z |

0; LOW LEVEL
1; HIGH LEVEL
X; DON'T CARE
HI-Z; HIGH IMPEDANCE

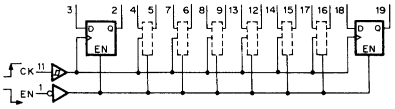
3 2 4 5 7 6 8 9 13 12 14 15 17 16 18 19
D Q
EN
CK 11
EN 1

### MC74HC540N (MOTOROLA)

C-MOS 3-STATE INVERTING BUFFER/LINE DRIVER/LINE RECEIVER
– TOP VIEW –

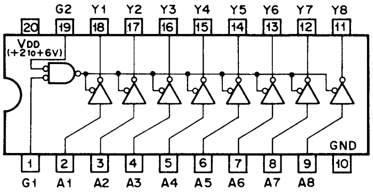
G2 Y1 Y2 Y3 Y4 Y5 Y6 Y7 Y8
20 19 18 17 16 15 14 13 12 11
VDD (+2 to +6V)
GND
1 2 3 4 5 6 7 8 9 10
G1 A1 A2 A3 A4 A5 A6 A7 A8

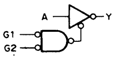

| G1 | G2 | A | Y |
|---|---|---|---|
| 0 | 0 | 0 | 1 |
| 0 | 0 | 1 | 0 |
| 1 | X | X | HI-Z |
| X | 1 | X | HI-Z |

0; LOW LEVEL
1; HIGH LEVEL
X; DON'T CARE
HI-Z; HIGH IMPEDANCE

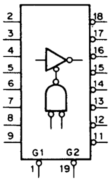
2 3 4 5 6 7 8 9
18 17 16 15 14 13 12 11
G1 G2
1 19

### SN74HC393N (TI)

C-MOS 4-BIT BINARY COUNTER
– TOP VIEW –

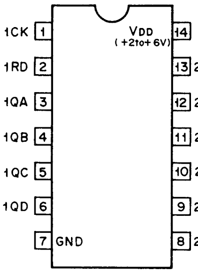
1CK 1
1RD 2
1QA 3
1QB 4
1QC 5
1QD 6
7 GND
VDD (+2 to +6V) 14
13 2CK
12 2RD
11 2QA
10 2QB
9 2QC
8 2QD

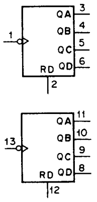
1
QA 3
QB 4
QC 5
RD QD 6
2
13
QA 11
QB 10
QC 9
RD QD 8
12

COUNT SEQUENCE

| COUNT | QD | QC | QB | QA |
|---|---|---|---|---|
| 0 | 0 | 0 | 0 | 0 |
| 1 | 0 | 0 | 0 | 1 |
| 2 | 0 | 0 | 1 | 0 |
| 3 | 0 | 0 | 1 | 1 |
| 4 | 0 | 1 | 0 | 0 |
| 5 | 0 | 1 | 0 | 1 |
| 6 | 0 | 1 | 1 | 0 |
| 7 | 0 | 1 | 1 | 1 |
| 8 | 1 | 0 | 0 | 0 |
| 9 | 1 | 0 | 0 | 1 |
| 10 | 1 | 0 | 1 | 0 |
| 11 | 1 | 0 | 1 | 1 |
| 12 | 1 | 1 | 0 | 0 |
| 13 | 1 | 1 | 0 | 1 |
| 14 | 1 | 1 | 1 | 0 |
| 15 | 1 | 1 | 1 | 1 |

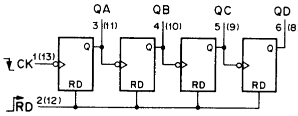
QA QB QC QD
3 (11) 4 (10) 5 (9) 6 (8)
CK 1(13)
RD 2(12)
Q
RD

RESET/COUNT FUNCTION

| RD | QD | QC | QB | QA |
|---|---|---|---|---|
| 1 | 0 | 0 | 0 | 0 |
| 0 | COUNT | | | |

0; LOW LEVEL
1; HIGH LEVEL

### MC74HC541N (MOTOROLA)
### SN74HCT541N (TI)
### TC74HC541F (TOSHIBA) FLAT PACKAGE
### TC74HC541P (TOSHIBA)

C-MOS BUFFERS AND LINE DRIVERS WITH 3-STATE OUTPUTS
– TOP VIEW –

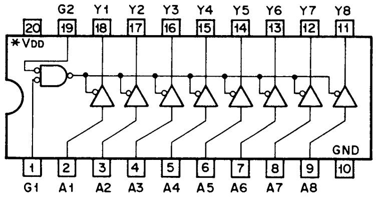
G2 Y1 Y2 Y3 Y4 Y5 Y6 Y7 Y8
20 19 18 17 16 15 14 13 12 11
✱VDD
GND
1 2 3 4 5 6 7 8 9 10
G1 A1 A2 A3 A4 A5 A6 A7 A8

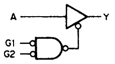

| G1 | G2 | A | Y |
|---|---|---|---|
| 0 | 0 | 0 | 0 |
| 0 | 0 | 1 | 1 |
| 1 | X | X | HI-Z |
| X | 1 | X | HI-Z |

0; LOW LEVEL
1; HIGH LEVEL
X; DON'T CARE
HI-Z; HIGH IMPEDANCE

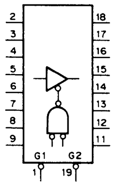
2 3 4 5 6 7 8 9
18 17 16 15 14 13 12 11
G1 G2
1 19

✱ VDD HC; +2 to +6V
HCT; +5V

### TC74HC423P (TOSHIBA)

C-MOS RETRIGGERABLE MONOSTABLE MULTIVIBRATOR
– TOP VIEW –

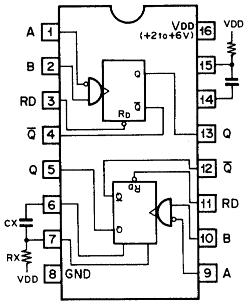
A 1
B 2
RD 3
Q̄ 4
Q 5
6
CX
7
RX
VDD 8 GND
VDD (+2 to +6V) 16
VDD
15
14
13 Q
12 Q̄
11 RD
10 B
9 A
Q
Q̄
RD

| INPUTS | | | OUTPUTS | |
|---|---|---|---|---|
| RD | A | B | Q | Q̄ |
| 0 | 0 | 0 | 0 | 1 |
| 1 | 1 | X | 0 | 1 |
| 1 | X | 0 | 0 | 1 |
| 1 | 0 | ↑ | ⊓ | ⊔ |
| 1 | ↓ | 1 | ⊓ | ⊔ |
| ↑ | 0 | 1 | ⊓ | ⊔ |

0; LOW LEVEL
1; HIGH LEVEL
X; DON'T CARE

## TC74HC564F (TOSHIBA) ($V_{DD}$ = +2 to +6V) FLAT PACKAGE
## C-MOS D-TYPE FLIP FLOP WITH 3-STATE OUTPUTS
– TOP VIEW –

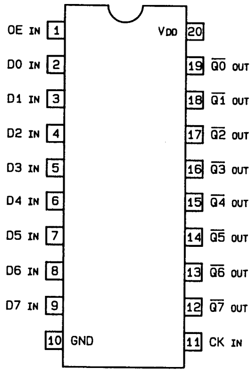
OE IN 1
D0 IN 2
D1 IN 3
D2 IN 4
D3 IN 5
D4 IN 6
D5 IN 7
D6 IN 8
D7 IN 9
10 GND
VDD 20
19 Q̄0 OUT
18 Q̄1 OUT
17 Q̄2 OUT
16 Q̄3 OUT
15 Q̄4 OUT
14 Q̄5 OUT
13 Q̄6 OUT
12 Q̄7 OUT
11 CK IN

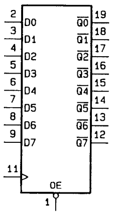
2 D0
3 D1
4 D2
5 D3
6 D4
7 D5
8 D6
9 D7
11
Q̄0 19
Q̄1 18
Q̄2 17
Q̄3 16
Q̄4 15
Q̄5 14
Q̄6 13
Q̄7 12
OE
1

| OE | CK | D | $\bar{Q}$ |
|---|---|---|---|
| 1 | X | X | HI-Z |
| 0 | ⌊ | X | $\bar{Q}n$ |
| 0 | ⌈ | 0 | 1 |
| 0 | ⌈ | 1 | 0 |

0; LOW LEVEL
1; HIGH LEVEL
X; DON'T CARE
HI-Z; HIGH IMPEDANCE

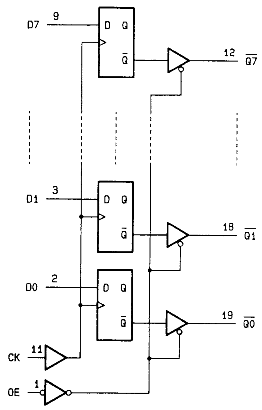
D7 9
D Q
Q̄
12 Q̄7
D1 3
18 Q̄1
D0 2
19 Q̄0
CK 11
OE 1

## TC74HC574P (TOSHIBA) ($V_{DD}$ = +2 to +6V)
## C-MOS 3-STATE D-TYPE EDGE-TRIGGERED FLIP-FLOP
– TOP VIEW –

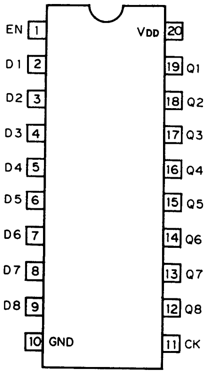
EN 1
D1 2
D2 3
D3 4
D4 5
D5 6
D6 7
D7 8
D8 9
10 GND
VDD 20
19 Q1
18 Q2
17 Q3
16 Q4
15 Q5
14 Q6
13 Q7
12 Q8
11 CK

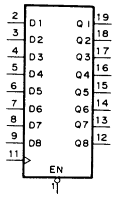
2 D1
3 D2
4 D3
5 D4
6 D5
7 D6
8 D7
9 D8
11
Q1 19
Q2 18
Q3 17
Q4 16
Q5 15
Q6 14
Q7 13
Q8 12
EN
1

EACH FLIP-FLOP

| INPUTS | | | OUT |
|---|---|---|---|
| EN | CK | D | Q |
| 0 | ⌈ | 1 | 1 |
| 0 | ⌈ | 0 | 0 |
| 0 | 0 | X | Qo |
| 1 | X | X | HI-Z |

0 ; LOW LEVEL
1 ; HIGH LEVEL
X ; DON'T CARE
HI-Z ; HIGH IMPEDANCE
Qo ; NO CHANGE

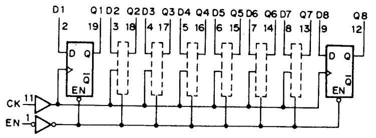
D1 2
Q1 19
D2 3
Q2 18
D3 4
Q3 17
D4 5
Q4 16
D5 6
Q5 15
D6 7
Q6 14
D7 8
Q7 13
D8 9
Q8 12
D Q
Q̄
EN
CK 11
EN 1

## TC74HC595P (TOSHIBA)
## C-MOS 8-BIT SERIAL-INPUT/SERIAL- OR PARALLEL-OUTPUT SHIFT REGISTER WITH LATCHED 3-STATE OUTPUT
– TOP VIEW –

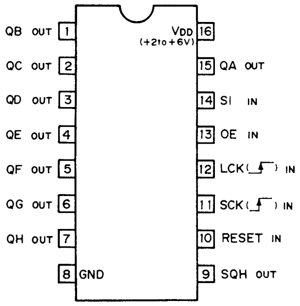
QB OUT 1
QC OUT 2
QD OUT 3
QE OUT 4
QF OUT 5
QG OUT 6
QH OUT 7
8 GND
VDD (+2 to +6V) 16
15 QA OUT
14 SI IN
13 OE IN
12 LCK IN
11 SCK IN
10 RESET IN
9 SQH OUT

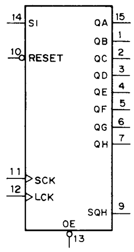
14 SI
10 RESET
11 SCK
12 LCK
OE 13
QA 15
QB 1
QC 2
QD 3
QE 4
QF 5
QG 6
QH 7
SQH 9

| | |
|---|---|
| OE | ; OUTPUT ENABLE INPUT |
| LCK | ; LATCH CLOCK INPUT |
| SCK | ; SHIFT CLOCK INPUT |
| RESET | ; SHIFT-REGISTER RESET INPUT |
| SI | ; SERIAL IN |
| QA-QH | ; PARALLEL OUTPUTS |
| SQH | ; SERIAL OUT |

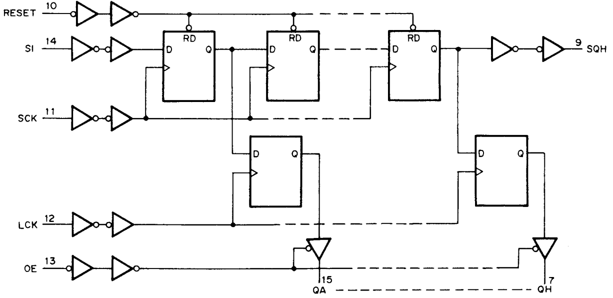
RESET 10
SI 14
SCK 11
LCK 12
OE 13
RD
D Q
9 SQH
15 QA
7 QH

## TC74HC573P (TOSHIBA) ($V_{DD}$ = +2 to +6V)
## C-MOS 3-STATE OUTPUTS OCTAL LATCHES
– TOP VIEW –

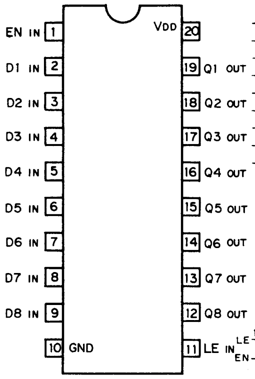
EN IN 1
D1 IN 2
D2 IN 3
D3 IN 4
D4 IN 5
D5 IN 6
D6 IN 7
D7 IN 8
D8 IN 9
10 GND
VDD 20
19 Q1 OUT
18 Q2 OUT
17 Q3 OUT
16 Q4 OUT
15 Q5 OUT
14 Q6 OUT
13 Q7 OUT
12 Q8 OUT
11 LE IN

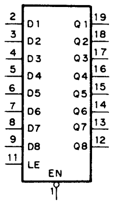
2 D1
3 D2
4 D3
5 D4
6 D5
7 D6
8 D7
9 D8
11 LE
Q1 19
Q2 18
Q3 17
Q4 16
Q5 15
Q6 14
Q7 13
Q8 12
EN
1

| INPUTS | | | OUT |
|---|---|---|---|
| EN | LE | D | Q |
| 0 | 1 | 1 | 1 |
| 0 | 1 | 0 | 0 |
| 0 | 0 | X | Qo |
| 1 | X | X | HI-Z |

0 ; LOW LEVEL
1 ; HIGH LEVEL
X ; DON'T CARE
HI-Z ; HIGH IMPEDANCE
Qo ; NO CHANGE

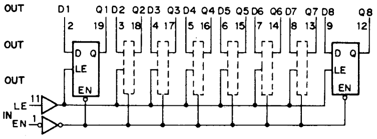
D1 2
Q1 19
D2 3
Q2 18
D3 4
Q3 17
D4 5
Q4 16
D5 6
Q5 15
D6 7
Q6 14
D7 8
Q7 13
D8 9
Q8 12
D Q
LE
EN
LE IN 11
EN 1

## CD74HC4015E (RCA)

C-MOS DUAL 4-STAGE STATIC SHIFT REGISTER WITH DIRECT RESET
- TOP VIEW -

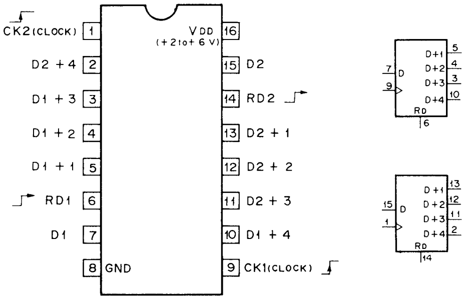
CK2(CLOCK) 1
D2 + 4 2
D1 + 3 3
D1 + 2 4
D1 + 1 5
RD1 6
D1 7
8 GND
VDD (+2 to + 6 V) 16
15 D2
14 RD2
13 D2 + 1
12 D2 + 2
11 D2 + 3
10 D1 + 4
9 CK1(CLOCK)
D
RD
D+1
D+2
D+3
D+4

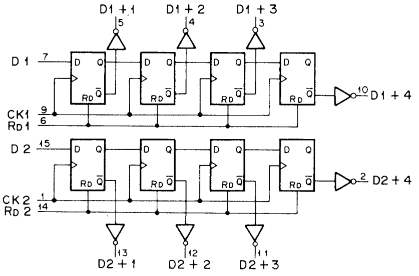
D1 + 1
D1 + 2
D1 + 3
D1
CK1
RD1
D Q
RD Q̄
D1 + 4
D 2
CK2
RD 2
D2 + 4
D2 + 1
D2 + 2
D2 + 3

## TC74HC4040P (TOSHIBA)

C-MOS 12-STAGE RIPPLE CARRY BINARY COUNTER/DRIVER
- TOP VIEW -

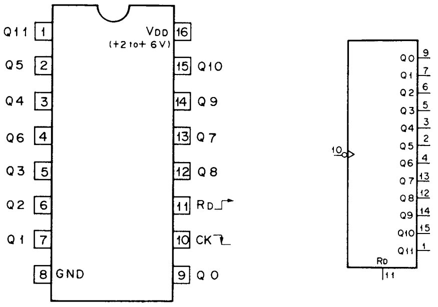
Q11 1
Q5 2
Q4 3
Q6 4
Q3 5
Q2 6
Q1 7
8 GND
VDD (+2 to+ 6V) 16
15 Q10
14 Q9
13 Q7
12 Q8
11 RD
10 CK
9 Q 0
Q0
Q1
Q2
Q3
Q4
Q5
Q6
Q7
Q8
Q9
Q10
Q11
RD

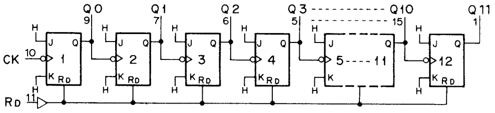
Q0
Q1
Q2
Q3
Q10
Q11
CK
RD
H
J Q
K RD
1
2
3
4
5 ---- 11
12

| COUNT | Q11 | Q10 | Q9 | Q8 | Q7 | Q6 | Q5 | Q4 | Q3 | Q2 | Q1 | Q0 |
|---|---|---|---|---|---|---|---|---|---|---|---|---|
| 0 | 0 | 0 | 0 | 0 | 0 | 0 | 0 | 0 | 0 | 0 | 0 | 0 |
| 1 | 0 | 0 | 0 | 0 | 0 | 0 | 0 | 0 | 0 | 0 | 0 | 1 |
| 2 | 0 | 0 | 0 | 0 | 0 | 0 | 0 | 0 | 0 | 0 | 1 | 0 |
| 3 | 0 | 0 | 0 | 0 | 0 | 0 | 0 | 0 | 0 | 0 | 1 | 1 |
| ⋮ | ⋮ | ⋮ | ⋮ | ⋮ | ⋮ | ⋮ | ⋮ | ⋮ | ⋮ | ⋮ | ⋮ | ⋮ |
| 4095 | 1 | 1 | 1 | 1 | 1 | 1 | 1 | 1 | 1 | 1 | 1 | 1 |

| RD | Q11 ------- Q0 |
|---|---|
| 1 | ALL LOW |
| 0 | COUNT |

0; LOW LEVEL
1; HIGH LEVEL

## MC74HC4051N (MOTOROLA)
## TC74HC4051AP (TOSHIBA)

C-MOS 8-CHANNEL ANALOG MULTIPLEXER/DEMULTIPLEXER
- TOP VIEW -

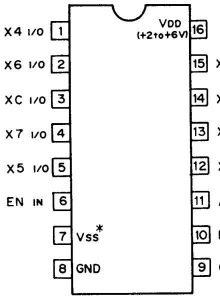
X4 I/O 1
X6 I/O 2
XC I/O 3
X7 I/O 4
X5 I/O 5
EN IN 6
7 VSS*
8 GND
VDD (+2 to +6V) 16
15 X2 I/O
14 X1 I/O
13 X0 I/O
12 X3 I/O
11 A IN
10 B IN
9 C IN

*VDD - VSS = +2 to +12V

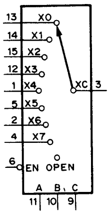
13 X0
14 X1
15 X2
12 X3
1 X4
5 X5
2 X6
4 X7
6 EN
OPEN
XC 3
A B C
11 10 9

| CONTROL INPUTS | | | | SELECTED CHANNEL |
|---|---|---|---|---|
| EN | SELECT | | | |
| | C | B | A | |
| 0 | 0 | 0 | 0 | X0 |
| 0 | 0 | 0 | 1 | X1 |
| 0 | 0 | 1 | 0 | X2 |
| 0 | 0 | 1 | 1 | X3 |
| 0 | 1 | 0 | 0 | X4 |
| 0 | 1 | 0 | 1 | X5 |
| 0 | 1 | 1 | 0 | X6 |
| 0 | 1 | 1 | 1 | X7 |
| 1 | X | X | X | OPEN |

0; LOW LEVEL
1; HIGH LEVEL
X; DON'T CARE

| | |
|---|---|
| X0 to X7; | ANALOG INPUTS/OUTPUTS |
| XC; | COMMON INPUT/OUTPUT |
| A,B,C; | CHANNEL SELECT INPUT |
| EN; | ENABLE INPUT |

## MC74HC4052N (MOTOROLA)

C-MOS 4-CHANNEL MULTIPLEXER/DEMULTIPLEXER
- TOP VIEW -

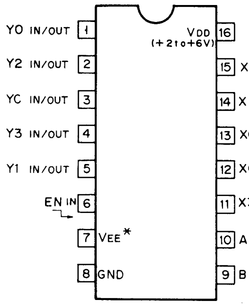
Y0 IN/OUT 1
Y2 IN/OUT 2
YC IN/OUT 3
Y3 IN/OUT 4
Y1 IN/OUT 5
EN IN 6
7 VEE*
8 GND
VDD (+2 to +6V) 16
15 X2 IN/OUT
14 X1 IN/OUT
13 XC IN/OUT
12 X0 IN/OUT
11 X3 IN/OUT
10 A IN
9 B IN

VEE*; VDD−VEE = +3 to +12 V

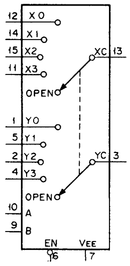
12 X0
14 X1
15 X2
11 X3
OPEN
XC 13
1 Y0
5 Y1
2 Y2
4 Y3
OPEN
YC 3
10 A
9 B
EN 6
VEE 7

| CONTROL INPUTS | | | "ON" CHANNEL |
|---|---|---|---|
| EN | B | A | |
| 0 | 0 | 0 | 0 |
| 0 | 0 | 1 | 1 |
| 0 | 1 | 0 | 2 |
| 0 | 1 | 1 | 3 |
| 1 | X | X | OPEN |

0; LOW LEVEL
1; HIGH LEVEL
X; DON'T CARE.

## MC74HC4053N (MOTOROLA)

C-MOS 2-CHANNEL MULTIPLEXER/DEMULTIPLEXER
- TOP VIEW -

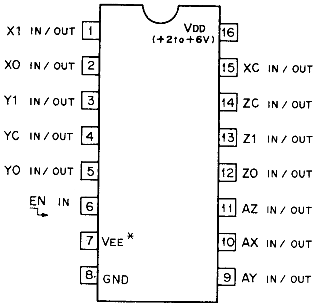
X1 IN/OUT 1
X0 IN/OUT 2
Y1 IN/OUT 3
YC IN/OUT 4
Y0 IN/OUT 5
EN IN 6
7 VEE*
8 GND
VDD (+2 to +6V) 16
15 XC IN/OUT
14 ZC IN/OUT
13 Z1 IN/OUT
12 Z0 IN/OUT
11 AZ IN/OUT
10 AX IN/OUT
9 AY IN/OUT

VEE*; VDD−VEE = +3 to +12V
VEE ≦ GND

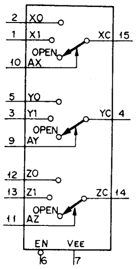
2 X0
1 X1
OPEN
10 AX
XC 15
5 Y0
3 Y1
OPEN
9 AY
YC 4
12 Z0
13 Z1
OPEN
11 AZ
ZC 14
EN 6
VEE 7

| CONT. INPUTS | | ON CHANNEL |
|---|---|---|
| EN | A (X,Y,Z,) | |
| 0 | 0 | 0 |
| 0 | 1 | 1 |
| 1 | X | OPEN |

0; LOW LEVEL
1; HIGH LEVEL
X; DON'T CARE.

## TC74HC4520P (TOSHIBA)

CMOS DIGITAL IC
- TOP VIEW -

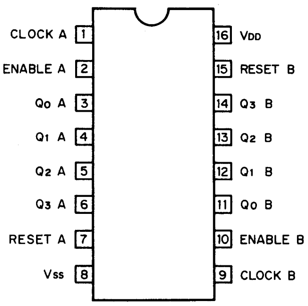
CLOCK A 1
ENABLE A 2
Q0 A 3
Q1 A 4
Q2 A 5
Q3 A 6
RESET A 7
Vss 8
16 VDD
15 RESET B
14 Q3 B
13 Q2 B
12 Q1 B
11 Q0 B
10 ENABLE B
9 CLOCK B

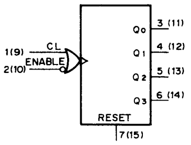
1(9)
2(10)
CL
ENABLE
Q0
Q1
Q2
Q3
3 (11)
4 (12)
5 (13)
6 (14)
RESET
7(15)

| STATE | OUTPUTS | | | |
|---|---|---|---|---|
| | Q3 | Q2 | Q1 | Q0 |
| 0 | 0 | 0 | 0 | 0 |
| 1 | 0 | 0 | 0 | 1 |
| 2 | 0 | 0 | 1 | 0 |
| 3 | 0 | 0 | 1 | 1 |
| 4 | 0 | 1 | 0 | 0 |
| 5 | 0 | 1 | 0 | 1 |
| 6 | 0 | 1 | 1 | 0 |
| 7 | 0 | 1 | 1 | 1 |
| 8 | 1 | 0 | 0 | 0 |
| 9 | 1 | 0 | 0 | 1 |
| 10 | 1 | 0 | 1 | 0 |
| 11 | 1 | 0 | 1 | 1 |
| 12 | 1 | 1 | 0 | 0 |
| 13 | 1 | 1 | 0 | 1 |
| 14 | 1 | 1 | 1 | 0 |
| 15 | 1 | 1 | 1 | 1 |

| CL | ENABLE | RESET | ACTION |
|---|---|---|---|
| ↑ | 1 | 0 | INCREMENT COUNTER |
| 0 | ↓ | 0 | INCREMENT COUNTER |
| ↓ | X | 0 | NO CHANGE |
| X | ↑ | 0 | NO CHANGE |
| ↑ | 0 | 0 | NO CHANGE |
| 1 | ↓ | 0 | NO CHANGE |
| X | X | 1 | QA THRU QD=0 |

0 ; LOW LEVEL
1 ; HIGH LEVEL
X ; DON'T CARE

## TC74HC4538P (TOSHIBA)

C-MOS DUAL RETRIGGERABLE/NON-RETRIGGERABLE MONOSTABLE MULTIVIBRATOR
- TOP VIEW -

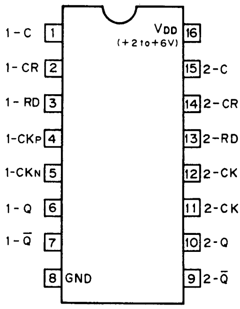
1-C 1
1-CR 2
1-RD 3
1-CKP 4
1-CKN 5
1-Q 6
1-Q̄ 7
8 GND
VDD (+2 to +6V) 16
15 2-C
14 2-CR
13 2-RD
12 2-CKP
11 2-CKN
10 2-Q
9 2-Q̄

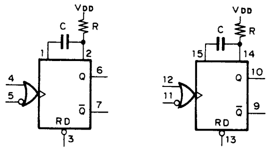
VDD
C
R
1
2
4
5
6
7
Q
Q̄
RD
3
VDD
C
R
15
14
12
11
10
9
Q
Q̄
RD
13

OUTPUT PULSE WIDTH = k·C·R

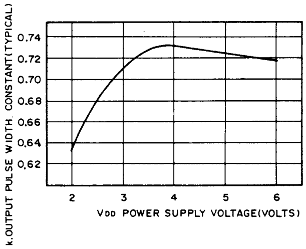

RETRIGGERABLE M.M.V

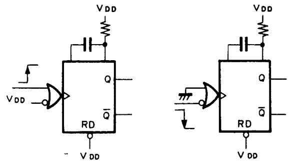
VDD
VDD
Q
Q̄
RD
VDD
VDD
Q
Q̄
RD
VDD

NON-RETRIGGERABLE M.M.V

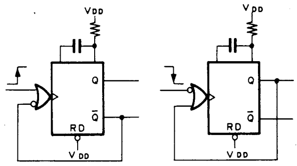
VDD
Q
Q̄
RD
VDD
VDD
Q
Q̄
RD
VDD

## X2212P (XICOR) (ACCESS TIME = 300nS)

N-MOS 1024 (256x4)-BIT NONVOLATILE STATIC RAM
- TOP VIEW -

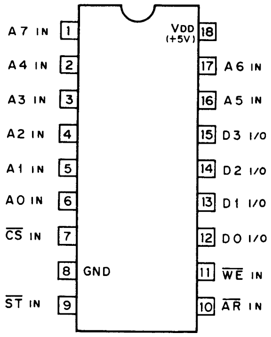
A7 IN 1
A4 IN 2
A3 IN 3
A2 IN 4
A1 IN 5
A0 IN 6
$\overline{CS}$ IN 7
8 GND
$\overline{ST}$ IN 9
VDD (+5V) 18
17 A6 IN
16 A5 IN
15 D3 I/O
14 D2 I/O
13 D1 I/O
12 D0 I/O
11 $\overline{WE}$ IN
10 $\overline{AR}$ IN

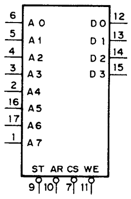
6 A0
5 A1
4 A2
3 A3
2 A4
16 A5
17 A6
1 A7
D0 12
D1 13
D2 14
D3 15
ST AR CS WE
9 10 7 11

A0 - A7 ; ADDRESS INPUTS
AR ; ARRAY RECALL
CS ; CHIP SELECT
D0 - D3 ; DATA INPUT/OUTPUT
ST ; STORE
WE ; WRITE ENABLE

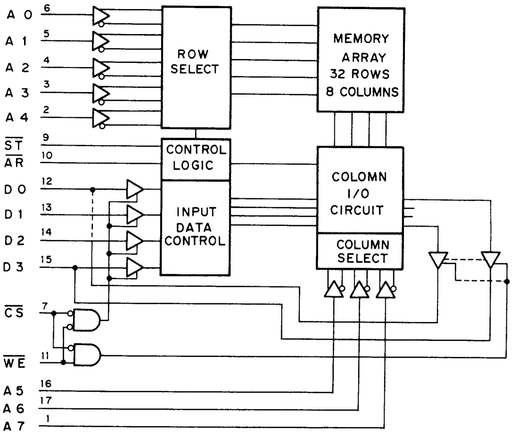
A0 6
A1 5
A2 4
A3 3
A4 2
ROW SELECT
MEMORY ARRAY 32 ROWS 8 COLUMNS
$\overline{ST}$ 9
$\overline{AR}$ 10
CONTROL LOGIC
D0 12
D1 13
D2 14
D3 15
INPUT DATA CONTROL
COLOMN I/O CIRCUIT
COLUMN SELECT
$\overline{CS}$ 7
$\overline{WE}$ 11
A5 16
A6 17
A7 1

| INPUTS | | | | I/O | MODE |
|---|---|---|---|---|---|
| $\overline{CS}$ | $\overline{WE}$ | $\overline{AR}$ | $\overline{ST}$ | | |
| 1 | X | 1 | 1 | HI-Z | NOT SELECTED |
| 0 | 1 | 1 | 1 | OUTPUT DATA | RAM READ |
| 0 | 0 | 1 | 1 | INPUT DATA 1 | RAM WRITE "1" |
| 0 | 0 | 1 | 1 | INPUT DATA 0 | RAM WRITE "0" |
| X | 1 | 0 | 1 | HI - Z | ARRAY RECALL |
| 1 | X | 0 | 1 | HI - Z | ARRAY RECALL |
| X | 1 | 1 | 0 | HI - Z | NONVOLATILE STORING |
| 1 | X | 1 | 0 | HI - Z | NONVOLATILE STORING |

0 ; LOW LEVEL
1 ; HIGH LEVEL
X ; DON'T CARE
HI-Z ; HIGH IMPEDANCE

MB81C68A-25P (FUJITSU) (ACCESS TIME = 25nS)

C-MOS 16384-BIT (4096x4) STATIC RAM

– TOP VIEW –

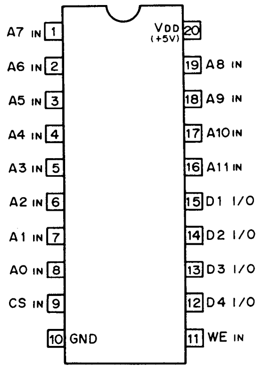
A7 IN 1
A6 IN 2
A5 IN 3
A4 IN 4
A3 IN 5
A2 IN 6
A1 IN 7
A0 IN 8
CS IN 9
10 GND
20 VDD (+5V)
19 A8 IN
18 A9 IN
17 A10 IN
16 A11 IN
15 D1 I/O
14 D2 I/O
13 D3 I/O
12 D4 I/O
11 WE IN

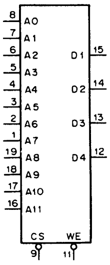
8 A0
7 A1
6 A2
5 A3
4 A4
3 A5
2 A6
1 A7
19 A8
18 A9
17 A10
16 A11
D1 15
D2 14
D3 13
D4 12
CS 9
WE 11

A0-A11 ; ADDRESS INPUTS
CS ; CHIP SELECT
D1-D4 ; DATA INPUTS/OUTPUTS
WE ; WRITE ENABLE INPUT

FUNCTION TABLE

| CS | WE | MODE | D1-D4 |
|---|---|---|---|
| 1 | X | NO CHANGE | HI-Z |
| 0 | 0 | WRITE | INPUT |
| 0 | 1 | READ | OUTPUT |

0 ; LOW LEVEL
1 ; HIGH LEVEL
X ; DON'T CARE
HI-Z ; HIGH IMPEDANCE

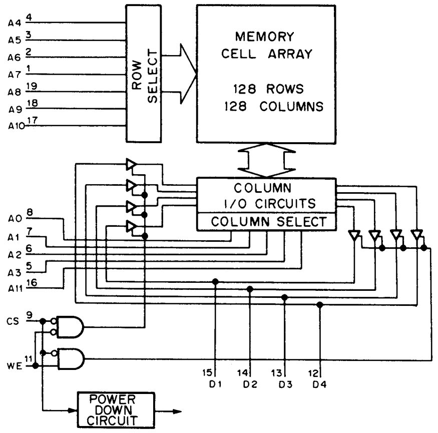
A4 4
A5 3
A6 2
A7 1
A8 19
A9 18
A10 17
ROW SELECT
MEMORY CELL ARRAY
128 ROWS
128 COLUMNS
COLUMN I/O CIRCUITS
COLUMN SELECT
A0 8
A1 7
A2 6
A3 5
A11 16
CS 9
WE 11
15 D1
14 D2
13 D3
12 D4
POWER DOWN CIRCUIT

MB8422-90LP (FUJITSU) (ACCESS TIME = 90nS)

C-MOS 16K (2048x8)-BIT DUAL PORT STATIC RAM

– TOP VIEW –

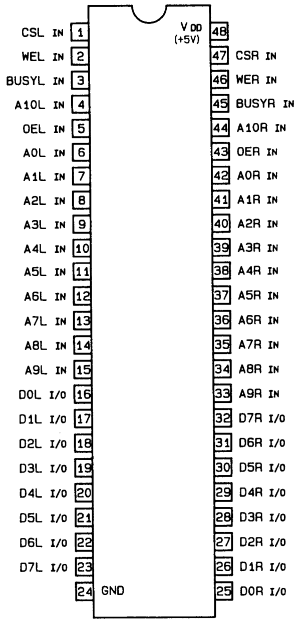
CSL IN 1
WEL IN 2
BUSYL IN 3
A10L IN 4
OEL IN 5
A0L IN 6
A1L IN 7
A2L IN 8
A3L IN 9
A4L IN 10
A5L IN 11
A6L IN 12
A7L IN 13
A8L IN 14
A9L IN 15
D0L I/O 16
D1L I/O 17
D2L I/O 18
D3L I/O 19
D4L I/O 20
D5L I/O 21
D6L I/O 22
D7L I/O 23
24 GND
48 VDD (+5V)
47 CSR IN
46 WER IN
45 BUSYR IN
44 A10R IN
43 OER IN
42 A0R IN
41 A1R IN
40 A2R IN
39 A3R IN
38 A4R IN
37 A5R IN
36 A6R IN
35 A7R IN
34 A8R IN
33 A9R IN
32 D7R I/O
31 D6R I/O
30 D5R I/O
29 D4R I/O
28 D3R I/O
27 D2R I/O
26 D1R I/O
25 D0R I/O

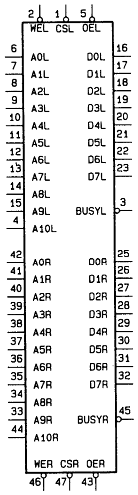
2 WEL
1 CSL
5 OEL
6 A0L
7 A1L
8 A2L
9 A3L
10 A4L
11 A5L
12 A6L
13 A7L
14 A8L
15 A9L
4 A10L
D0L 16
D1L 17
D2L 18
D3L 19
D4L 20
D5L 21
D6L 22
D7L 23
BUSYL 3
42 A0R
41 A1R
40 A2R
39 A3R
38 A4R
37 A5R
36 A6R
35 A7R
34 A8R
33 A9R
44 A10R
D0R 25
D1R 26
D2R 27
D3R 28
D4R 29
D5R 30
D6R 31
D7R 32
BUSYR 45
WER 46
CSR 47
OER 43

LEFT PORT
A0L–A10L; ADDRESS INPUTS
BUSYL; BUSY OUTPUT
CSL; CHIP SELECT INPUT
D0L–D7L; DATA INPUTS/OUTPUTS
OEL; OUTPUT ENABLE INPUT
WEL; WRITE ENABLE INPUT

RIGHT PORT
A0R–A10R; ADDRESS INPUTS
BUSYR; BUSY OUTPUT
CSR; CHIP SELECT INPUT
D0R–D7R; DATA INPUTS/OUTPUTS
OER; OUTPUT ENABLE INPUT
WER; WRITE ENABLE INPUT

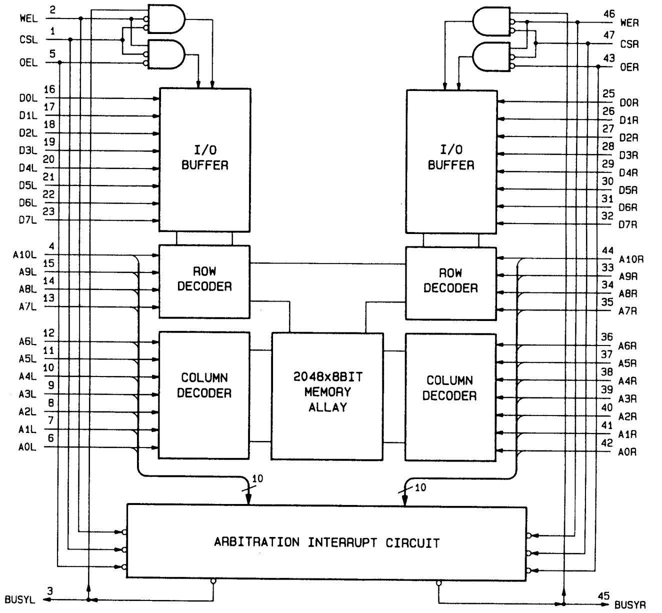
WEL 2
CSL 1
OEL 5
D0L 16
D1L 17
D2L 18
D3L 19
D4L 20
D5L 21
D6L 22
D7L 23
A10L 4
A9L 15
A8L 14
A7L 13
A6L 12
A5L 11
A4L 10
A3L 9
A2L 8
A1L 7
A0L 6
I/O BUFFER
ROW DECODER
COLUMN DECODER
2048x8BIT MEMORY ALLAY
I/O BUFFER
ROW DECODER
COLUMN DECODER
46 WER
47 CSR
43 OER
25 D0R
26 D1R
27 D2R
28 D3R
29 D4R
30 D5R
31 D6R
32 D7R
44 A10R
33 A9R
34 A8R
35 A7R
36 A6R
37 A5R
38 A4R
39 A3R
40 A2R
41 A1R
42 A0R
10
10
ARBITRATION INTERRUPT CIRCUIT
BUSYL 3
45 BUSYR

## HM6116ALSP-12 (HITACHI) (ACCESS TIME = 120nS)

C-MOS 16384 (2048x8)-BIT HIGH SPEED STATIC RAM
– TOP VIEW –

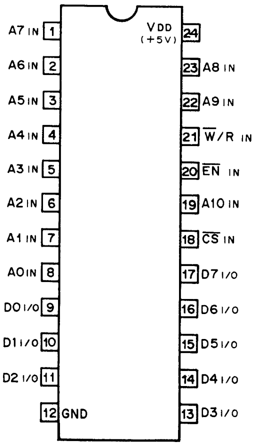
A7 IN 1
A6 IN 2
A5 IN 3
A4 IN 4
A3 IN 5
A2 IN 6
A1 IN 7
A0 IN 8
D0 I/O 9
D1 I/O 10
D2 I/O 11
12 GND
24 VDD (+5V)
23 A8 IN
22 A9 IN
21 W/R IN
20 EN IN
19 A10 IN
18 CS IN
17 D7 I/O
16 D6 I/O
15 D5 I/O
14 D4 I/O
13 D3 I/O

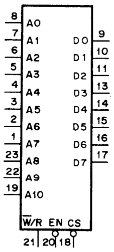
8 A0
7 A1
6 A2
5 A3
4 A4
3 A5
2 A6
1 A7
23 A8
22 A9
19 A10
D0 9
D1 10
D2 11
D3 13
D4 14
D5 15
D6 16
D7 17
W/R EN CS
21 20 18

| INPUTS | | | FUNCTION |
|---|---|---|---|
| CS | $\overline{\mathrm{W}}$/R | EN | |
| 0 | 0 | X | WRITE |
| 0 | 1 | 0 | READ |
| 0 | 1 | 1 | DISABLE<br>(OUTPUT=HI-Z) |
| 1 | X | X | DISABLE<br>(OUTPUT=HI-Z) |

0 ; LOW LEVEL
1 ; HIGH LEVEL
X ; DON'T CARE
HI-Z ; HIGH IMPEDANCE

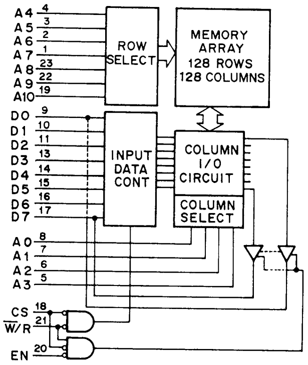
A4 4
A5 3
A6 2
A7 1
A8 23
A9 22
A10 19
ROW SELECT
MEMORY ARRAY 128 ROWS 128 COLUMNS
D0 9
D1 10
D2 11
D3 13
D4 14
D5 15
D6 16
D7 17
INPUT DATA CONT
COLUMN I/O CIRCUIT
COLUMN SELECT
A0 8
A1 7
A2 6
A3 5
CS 18
W/R 21
EN 20

A0 – A10 ; ADDRESS INPUTS
$\overline{\mathrm{W}}$/R ; WRITE/READ ENABLE
EN ; OUTPUT ENABLE
CS ; CHIP SELECT
D0 – D7 ; DATA INPUTS/OUTPUTS

## HM6264LP-15 (HITACHI) (ACCESS TIME = 150nS)

C-MOS 8192 WORDx8-BIT STATIC RAM
– TOP VIEW –

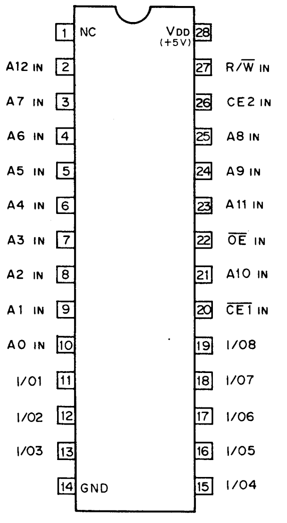
1 NC
A12 IN 2
A7 IN 3
A6 IN 4
A5 IN 5
A4 IN 6
A3 IN 7
A2 IN 8
A1 IN 9
A0 IN 10
I/O1 11
I/O2 12
I/O3 13
14 GND
VDD (+5V) 28
27 R/W IN
26 CE2 IN
25 A8 IN
24 A9 IN
23 A11 IN
22 OE IN
21 A10 IN
20 CE1 IN
19 I/O8
18 I/O7
17 I/O6
16 I/O5
15 I/O4

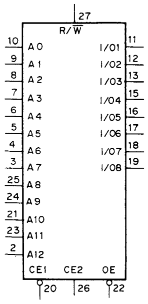
27 R/W
10 A0
9 A1
8 A2
7 A3
6 A4
5 A5
4 A6
3 A7
25 A8
24 A9
21 A10
23 A11
2 A12
I/O1 11
I/O2 12
I/O3 13
I/O4 15
I/O5 16
I/O6 17
I/O7 18
I/O8 19
CE1 CE2 OE
20 26 22

A0 – 12 ; ADDRESS INPUTS
CE1,2 ; CHIP ENABLE INPUTS
OE ; OUTPUT ENABLE INPUT
I/O1 – 8 ; DATA INPUTS/OUTPUTS
R/W ; READ/WRITE INPUT

| MODE | $\overline{\mathrm{CE1}}$ | CE2 | $\overline{\mathrm{OE}}$ | R/$\overline{\mathrm{W}}$ | I/O1 ~ 8 |
|---|---|---|---|---|---|
| READ | 0 | 1 | 0 | 1 | DATA OUTPUTS |
| WRITE | 0 | 1 | X | 0 | DATA INPUTS |
| OUTPUT DESELECT | 0 | 1 | 1 | 1 | HI – Z |
| STANDBY | 1 | X | X | X | HI – Z |
| | X | 0 | X | X | HI – Z |

0 ; LOW LEVEL
1 ; HIGH LEVEL
X ; DON'T CARE
HI-Z ; HIGH IMPEDANCE

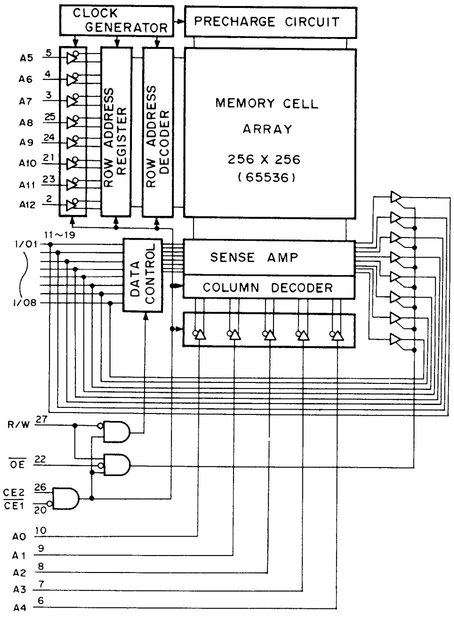
CLOCK GENERATOR
PRECHARGE CIRCUIT
A5 5
A6 4
A7 3
A8 25
A9 24
A10 21
A11 23
A12 2
ROW ADDRESS REGISTER
ROW ADDRESS DECODER
MEMORY CELL ARRAY
256 X 256 (65536)
11~19
I/O1
I/O8
DATA CONTROL
SENSE AMP
COLUMN DECODER
R/W 27
OE 22
CE2 26
CE1 20
A0 10
A1 9
A2 8
A3 7
A4 6

## MBM27C64-25 (FUJITSU) (ACCESS TIME = 250nS)

C-MOS 64K (8K-8) ERASABLE PROM WITH 3-STATE OUTPUTS
– TOP VIEW –

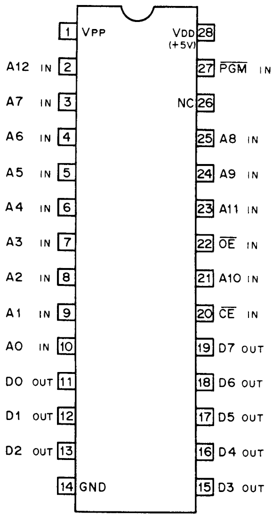
1 VPP
A12 IN 2
A7 IN 3
A6 IN 4
A5 IN 5
A4 IN 6
A3 IN 7
A2 IN 8
A1 IN 9
A0 IN 10
D0 OUT 11
D1 OUT 12
D2 OUT 13
14 GND
VDD (+5V) 28
27 PGM IN
NC 26
25 A8 IN
24 A9 IN
23 A11 IN
22 OE IN
21 A10 IN
20 CE IN
19 D7 OUT
18 D6 OUT
17 D5 OUT
16 D4 OUT
15 D3 OUT

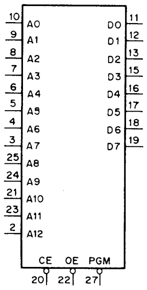
10 A0
9 A1
8 A2
7 A3
6 A4
5 A5
4 A6
3 A7
25 A8
24 A9
21 A10
23 A11
2 A12
D0 11
D1 12
D2 13
D3 15
D4 16
D5 17
D6 18
D7 19
CE OE PGM
20 22 27

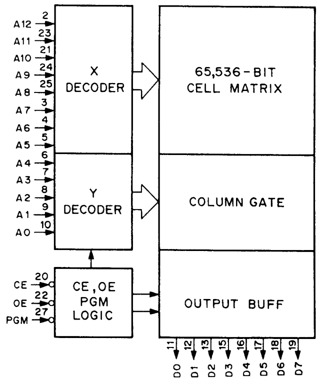
A12 2
A11 23
A10 21
A9 24
A8 25
A7 3
A6 4
A5 5
A4 6
A3 7
A2 8
A1 9
A0 10
X DECODER
Y DECODER
65,536-BIT CELL MATRIX
COLUMN GATE
CE 20
OE 22
PGM 27
CE, OE PGM LOGIC
OUTPUT BUFF
11 12 13 15 16 17 18 19
D0 D1 D2 D3 D4 D5 D6 D7

A0 – A12 ; ADDRESS
CE ; CHIP ENABLE
D0 – D7 ; DATA OUTPUT
OE ; OUTPUT ENABLE
PGM ; PROGRAM ENABLE
VPP ; PROGRAM VOLTAGE

| An | CE | OE | PGM | VPP | Dn | FUNCTION |
|---|---|---|---|---|---|---|
| An | 0 | 0 | 1 | +5V | D OUT | READ |
| An | 0 | 1 | 1 | +5V | HI-Z | OUTPUT DISABLE |
| An | 0 | 0 | 0 | +5V | HI-Z | OUTPUT DISABLE |
| X | 1 | X | X | +5V | HI-Z | STANDBY |
| An | 0 | X | ⊔ | +21V | DIN | PGM |
| An | 0 | 0 | 1 | +21V | D OUT | PGM VERIFY |
| X | 1 | X | X | +21V | HI-Z | PGM INH |

0 ; LOW LEVEL
1 ; HIGH LEVEL
X ; DON'T CARE
HI-Z ; HIGH IMPEDANCE

## MBM27C256A-25 (FUJITSU) (ACCESS TIME = 250nS)
## MBM27C256H-10 (FUJITSU) (ACCESS TIME = 100nS)

C-MOS 256K (32Kx8)-BIT ERASABLE PROM WITH 3-STATE OUTPUTS
– TOP VIEW –

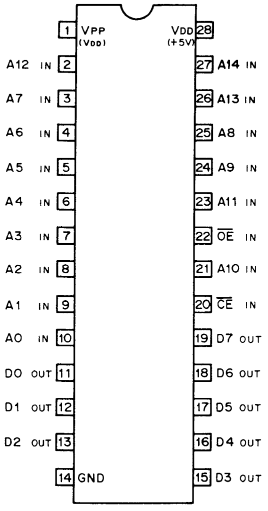
1 VPP (VDD)
2 A12 IN
3 A7 IN
4 A6 IN
5 A5 IN
6 A4 IN
7 A3 IN
8 A2 IN
9 A1 IN
10 A0 IN
11 D0 OUT
12 D1 OUT
13 D2 OUT
14 GND
28 VDD (+5V)
27 A14 IN
26 A13 IN
25 A8 IN
24 A9 IN
23 A11 IN
22 OE IN
21 A10 IN
20 CE IN
19 D7 OUT
18 D6 OUT
17 D5 OUT
16 D4 OUT
15 D3 OUT

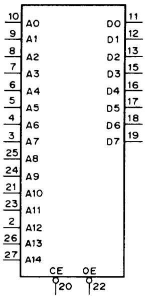
10 A0
9 A1
8 A2
7 A3
6 A4
5 A5
4 A6
3 A7
25 A8
24 A9
21 A10
23 A11
2 A12
26 A13
27 A14
D0 11
D1 12
D2 13
D3 15
D4 16
D5 17
D6 18
D7 19
CE 20
OE 22

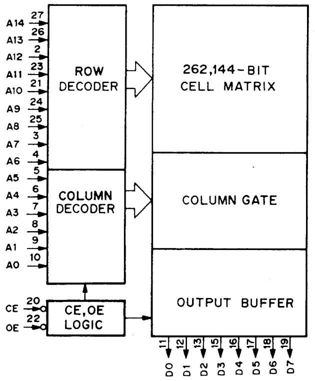
A14 27
A13 26
A12 2
A11 23
A10 21
A9 24
A8 25
A7 3
A6 4
A5 5
A4 6
A3 7
A2 8
A1 9
A0 10
ROW DECODER
262,144-BIT CELL MATRIX
COLUMN DECODER
COLUMN GATE
CE 20
OE 22
CE,OE LOGIC
OUTPUT BUFFER
11 D0
12 D1
13 D2
15 D3
16 D4
17 D5
18 D6
19 D7

A0-A14 ; ADDRESS INPUT
$\overline{CE}$ ; CHIP ENABLE
D0-D7 ; DATA OUTPUT
$\overline{OE}$ ; OUTPUT ENABLE
Vpp ; PROGRAM POWER SUPPLY

| An | $\overline{CE}$ | $\overline{OE}$ | VDD | Vpp | Dn | FUNCTION |
|---|---|---|---|---|---|---|
| An | 0 | 0 | +5V | +5V | D OUT | READ |
| An | 0 | 1 | +5V | +5V | HI-Z | OUTPUT DISABLE |
| X | 1 | X | +5V | +5V | HI-Z | STANDBY |
| An | 0 | 1 | +6V | +12.5V | D IN | PGM |
| An | 1 | 0 | +6V | +12.5V | D OUT | PGM VERIFY(1) |
| An | 0 | 0 | +6V | +12.5V | D OUT | PGM VERIFY(2) |
| X | 1 | 1 | +6V | +12.5V | HI-Z | PGM INH |
| A0 | 0 | 0 | +5V | +5V | DEVICE CODE | ELECTRONIC SIGNATURE* |

0: LOW LEVEL
1: HIGH LEVEL
X: DON'T CARE
HI-Z: HIGH IMPEDANCE

*SEE FOLLOWING DESCRIPTION.

ELECTRONIC SIGNATURE FOR P ROM WRITER
ADDRESS SETTINGS IN READ MODE

| A1 – A8 | A9 | A10 – A13 | A14, Vpp |
|---|---|---|---|
| 0 | 12V | 0 | 1 |

|  | A0 | CODE DATA |  |  |  |  |  |  |  |  |
|---|---|---|---|---|---|---|---|---|---|---|
|  |  | D7 | D6 | D5 | D4 | D3 | D2 | D1 | D0 |  |
| MAKER CODE | 0 | 0 | 0 | 0 | 0 | 0 | 1 | 0 | 0 | 04H |
| DEVICE CODE | 1 | 0 | 1 | 1 | 0 | 0 | 0 | 1 | 0 | 62H |

## PALC16L8Q-25CN (AMD/MONOLITHIC MEMORIES)

C-MOS PROGRAMMABLE LOGIC DEVICE
– TOP VIEW –

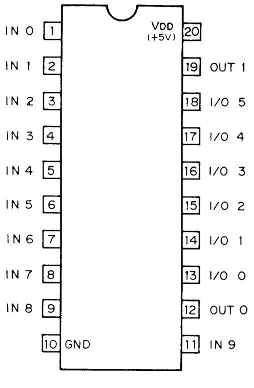
1 IN 0
2 IN 1
3 IN 2
4 IN 3
5 IN 4
6 IN 5
7 IN 6
8 IN 7
9 IN 8
10 GND
20 VDD (+5V)
19 OUT 1
18 I/O 5
17 I/O 4
16 I/O 3
15 I/O 2
14 I/O 1
13 I/O 0
12 OUT 0
11 IN 9

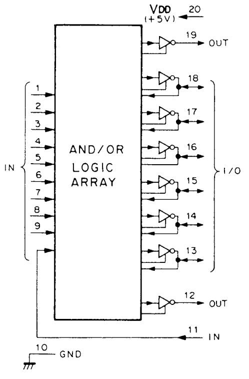
VDD (+5V) 20
19 OUT
18
17
16
15
14
13
I/O
12 OUT
11 IN
10 GND
IN
1
2
3
4
5
6
7
8
9
AND/OR LOGIC ARRAY

* ABOVE DIAGRAM SHOWS CONDITIONS BEFORE PROGRAMMING.

## PALC22V10H-25CNS (AMD/MONOLITHIC MEMORIES)

C-MOS PROGRAMMABLE LOGIC DEVICE
– TOP VIEW –

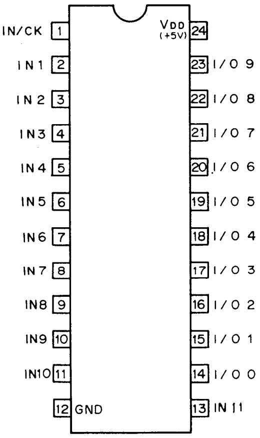
1 IN/CK
2 IN 1
3 IN 2
4 IN 3
5 IN 4
6 IN 5
7 IN 6
8 IN 7
9 IN8
10 IN9
11 IN10
12 GND
24 VDD (+5V)
23 I/O 9
22 I/O 8
21 I/O 7
20 I/O 6
19 I/O 5
18 I/O 4
17 I/O 3
16 I/O 2
15 I/O 1
14 I/O 0
13 IN 11

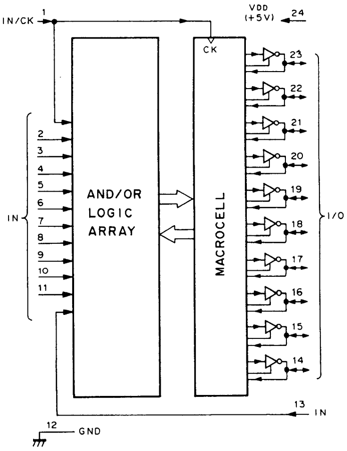
IN/CK 1
VDD (+5V) 24
CK
IN
2
3
4
5
6
7
8
9
10
11
AND/OR LOGIC ARRAY
MACROCELL
23
22
21
20
19
18
17
16
15
14
I/O
13 IN
12 GND

## uPD78C10G

C-MOS SINGLE CHIP 8-BIT MICROPROCESSOR WITH A/D CONVERTER
– TOP VIEW –

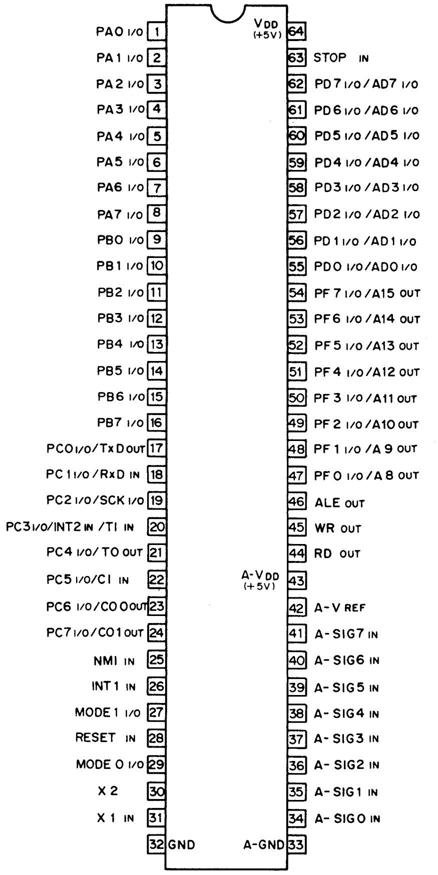
1 PA0 I/O
2 PA1 I/O
3 PA2 I/O
4 PA3 I/O
5 PA4 I/O
6 PA5 I/O
7 PA6 I/O
8 PA7 I/O
9 PB0 I/O
10 PB1 I/O
11 PB2 I/O
12 PB3 I/O
13 PB4 I/O
14 PB5 I/O
15 PB6 I/O
16 PB7 I/O
17 PC0 I/O/TxD OUT
18 PC1 I/O/RxD IN
19 PC2 I/O/SCK I/O
20 PC3 I/O/INT2 IN /TI IN
21 PC4 I/O/TO OUT
22 PC5 I/O/CI IN
23 PC6 I/O/CO0 OUT
24 PC7 I/O/CO1 OUT
25 NMI IN
26 INT1 IN
27 MODE1 I/O
28 RESET IN
29 MODE 0 I/O
30 X2
31 X1 IN
32 GND
64 VDD (+5V)
63 STOP IN
62 PD7 I/O/AD7 I/O
61 PD6 I/O/AD6 I/O
60 PD5 I/O/AD5 I/O
59 PD4 I/O/AD4 I/O
58 PD3 I/O/AD3 I/O
57 PD2 I/O/AD2 I/O
56 PD1 I/O/AD1 I/O
55 PD0 I/O/AD0 I/O
54 PF7 I/O/A15 OUT
53 PF6 I/O/A14 OUT
52 PF5 I/O/A13 OUT
51 PF4 I/O/A12 OUT
50 PF3 I/O/A11 OUT
49 PF2 I/O/A10 OUT
48 PF1 I/O/A9 OUT
47 PF0 I/O/A8 OUT
46 ALE OUT
45 WR OUT
44 RD OUT
43 A-VDD (+5V)
42 A-V REF
41 A-SIG7 IN
40 A-SIG6 IN
39 A-SIG5 IN
38 A-SIG4 IN
37 A-SIG3 IN
36 A-SIG2 IN
35 A-SIG1 IN
34 A-SIG0 IN
33 A-GND

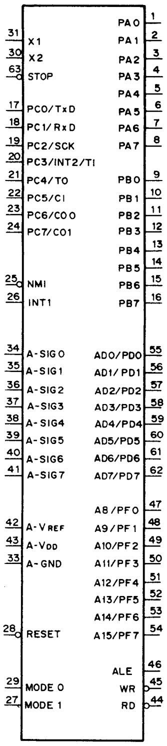
31 X1
30 X2
63 STOP
17 PC0/TxD
18 PC1/RxD
19 PC2/SCK
20 PC3/INT2/TI
21 PC4/TO
22 PC5/CI
23 PC6/CO0
24 PC7/CO1
25 NMI
26 INT1
34 A-SIG0
35 A-SIG1
36 A-SIG2
37 A-SIG3
38 A-SIG4
39 A-SIG5
40 A-SIG6
41 A-SIG7
42 A-VREF
43 A-VDD
33 A-GND
28 RESET
29 MODE 0
27 MODE 1
PA0 1
PA1 2
PA2 3
PA3 4
PA4 5
PA5 6
PA6 7
PA7 8
PB0 9
PB1 10
PB2 11
PB3 12
PB4 13
PB5 14
PB6 15
PB7 16
AD0/PD0 55
AD1/PD1 56
AD2/PD2 57
AD3/PD3 58
AD4/PD4 59
AD5/PD5 60
AD6/PD6 61
AD7/PD7 62
A8/PF0 47
A9/PF1 48
A10/PF2 49
A11/PF3 50
A12/PF4 51
A13/PF5 52
A14/PF6 53
A15/PF7 54
ALE 46
WR 45
RD 44

| | |
|---|---|
| PA0-7; | INPUT/OUTPUT PORT A |
| PB0-7; | INPUT/OUTPUT PORT B |
| PC0-7; | INPUT/OUTPUT PORT C |
| TxD; | SERIAL DATA OUTPUT |
| RxD; | SERIAL DATA INPUT |
| SCK; | SERIAL CLOCK I/O |
| INT2/T1; | MASKABLE INTERRUPT REQUEST 2 IN/TIMER INPUT |
| TO; | TIMER OUTPUT |
| C1; | COUNTER INPUT |
| CO 0; | COUNTER OUTPUT 0 |
| CO 1; | COUNTER OUTPUT 1 |
| PD0-7/AD0-7; | I/O PORT D / ADDRESS/DATA BUS |
| PF0-7/A8-15; | I/O PORT F / ADDRESS BUS |
| ALE; | ADDRESS LATCH ENABLE OUTPUT |
| RD; | READ STROBE OUTPUT |
| WR; | WRITE STROBE OUTPUT |
| MODE 0; | MEMORY MODE 0 INPUT/OUTPUT |
| MODE 1; | MEMORY MODE 1 INPUT/OUTPUT |
| RESET; | SYSTEM RESET INPUT |
| STOP; | SYSTEM STOP INPUT |
| NMI; | NON-MASKABLE INTERRUPT REQUEST INPUT |
| INT1; | MASKABLE INTERRUPT REQUEST 1 INPUT |
| X1,X2; | EXTERNAL CRYSTAL,X1;SYSTEM CLOCK INPUT |
| A-SIG 0 TO 7; | ANALOG INPUTS |
| A-VREF; | REFERENCE VOLTAGE |

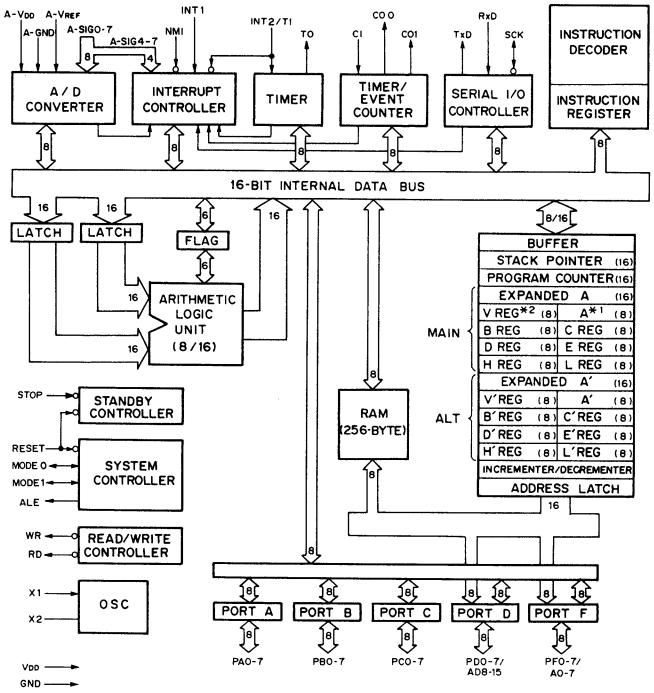
A-VDD
A-VREF
A-GND
A-SIG0-7
A-SIG4-7
NMI
INT1
INT2/TI
TO
CO0
CI
CO1
TxD
RxD
SCK
A / D CONVERTER
INTERRUPT CONTROLLER
TIMER
TIMER/ EVENT COUNTER
SERIAL I/O CONTROLLER
INSTRUCTION DECODER
INSTRUCTION REGISTER
16-BIT INTERNAL DATA BUS
LATCH
LATCH
FLAG
ARITHMETIC LOGIC UNIT (8/16)
BUFFER
STACK POINTER (16)
PROGRAM COUNTER (16)
MAIN
EXPANDED A (16)
V REG※2 (8)
A※1 (8)
B REG (8)
C REG (8)
D REG (8)
E REG (8)
H REG (8)
L REG (8)
ALT
EXPANDED A' (16)
V'REG (8)
A' (8)
B'REG (8)
C'REG (8)
D'REG (8)
E'REG (8)
H'REG (8)
L'REG (8)
INCREMENTER/DECREMENTER
ADDRESS LATCH
RAM (256-BYTE)
STOP
STANDBY CONTROLLER
RESET
MODE 0
MODE 1
ALE
SYSTEM CONTROLLER
WR
RD
READ/WRITE CONTROLLER
X1
X2
OSC
VDD
GND
PORT A
PORT B
PORT C
PORT D
PORT F
PA0-7
PB0-7
PC0-7
PD0-7/ AD8-15
PF0-7/ A0-7
8
16
8/16

※1; ACCUMULATOR
※2; WORKING REGISTER VECTOR REG.

uPD7004C (NEC)

C-MOS 10-BIT SUCCESSIVE COMPARATOR TYPE A/D CONVERTER
– TOP VIEW –

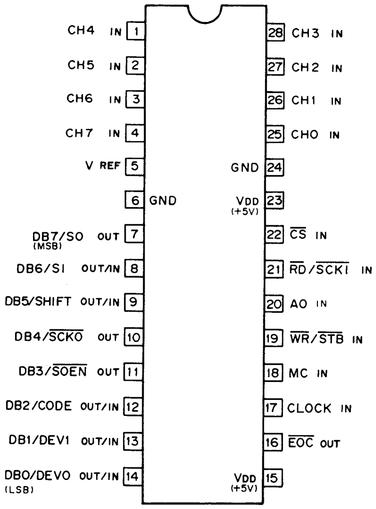
CH4 IN 1
CH5 IN 2
CH6 IN 3
CH7 IN 4
V REF 5
6 GND
DB7/SO OUT 7 (MSB)
DB6/SI OUT/IN 8
DB5/SHIFT OUT/IN 9
DB4/SCKO OUT 10
DB3/SOEN OUT 11
DB2/CODE OUT/IN 12
DB1/DEV1 OUT/IN 13
DB0/DEV0 OUT/IN 14 (LSB)
28 CH3 IN
27 CH2 IN
26 CH1 IN
25 CH0 IN
GND 24
VDD (+5V) 23
22 CS IN
21 RD/SCKI IN
20 A0 IN
19 WR/STB IN
18 MC IN
17 CLOCK IN
16 EOC OUT
VDD (+5V) 15

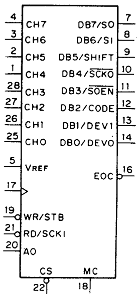
4 CH7
3 CH6
2 CH5
1 CH4
28 CH3
27 CH2
26 CH1
25 CH0
5 VREF
17
19 WR/STB
21 RD/SCKI
20 A0
DB7/SO 7
DB6/SI 8
DB5/SHIFT 9
DB4/SCKO 10
DB3/SOEN 11
DB2/CODE 12
DB1/DEV1 13
DB0/DEV0 14
EOC 16
CS 22
MC 18

| | | | |
|---|---|---|---|
| A0 | ; CONTROL ADDRESS INPUT | SCKI | ; SERIAL CLOCK INPUT |
| CH0~7 | ; ANALOG INPUT | SCKO | ; SERIAL CLOCK OUTPUT |
| CODE | ; CODE SELECT (2'S COMPLEMENT/ BINARY) INPUT | SHIFT | ; SHIFT SELECT (LSB FIRST/ MSB FIRST) |
| CS | ; CHIP SELECT INPUT | SI | ; SERIAL INPUT |
| DB0~7 | ; DATA BUS INPUT/OUTPUT | SO | ; SERIAL OUTPUT |
| DEV0, DEV1 | ; CLOCK RATE SELECT INPUT | SOEN | ; SERIAL OUTPUT ENABLE OUTPUT |
| EOC | ; CONVERSION ENDING SIGNAL OUTPUT | STB | ; ADDRESS WRITE STROBE SIGNAL INPUT |
| MC | ; MODE SELECT INPUT | WR | ; WRITE SIGNAL INPUT |
| RD | ; READ SIGNAL INPUT | | |

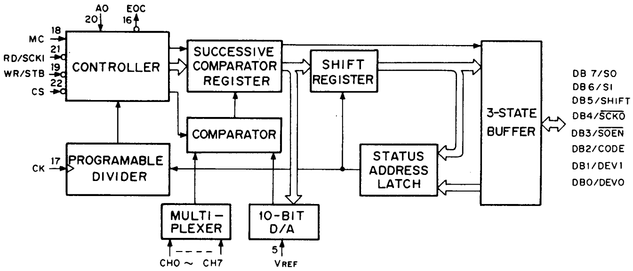
A0
EOC
20
16
MC 18
RD/SCKI 21
WR/STB 19
CS 22
CONTROLLER
SUCCESSIVE COMPARATOR REGISTER
SHIFT REGISTER
COMPARATOR
CK 17
PROGRAMABLE DIVIDER
STATUS ADDRESS LATCH
3-STATE BUFFER
MULTI-PLEXER
10-BIT D/A
CH0 ~ CH7
5 VREF
DB 7/SO
DB 6/SI
DB5/SHIFT
DB4/SCKO
DB3/SOEN
DB2/CODE
DB1/DEV1
DB0/DEV0

| MC | MODE |
|---|---|
| 0 | SERIAL |
| 1 | PARALLEL |

PARALLEL MODE

| $\overline{\text{CS}}$ | $\overline{\text{WR}}$ | $\overline{\text{RD}}$ | A0 | MODE |
|---|---|---|---|---|
| 1 | X | X | X | HIGH IMPEDANCE |
| 0 | 1 | 1 | X | HIGH IMPEDANCE |
| 0 | 0 | 1 | 0 | ∗1 ANALOG CHANNEL SELECT |
| 0 | 0 | 1 | 1 | ∗2 CODE SELECT/<br>∗3 CLOCK RATE SELECT |
| 0 | 1 | 0 | 0 | ∗4 LOW-BYTE DATA OUTPUT |
| 0 | 1 | 0 | 1 | ∗4 HIGH-BYTE DATA OUTPUT |
| 0 | 0 | 0 | X | INHIBIT |

0; LOW LEVEL X: DON'T CARE
1; HIGH LEVEL

∗1 ANALOG CHANNEL

| SEL2 | SEL1 | SEL0 | MPX CHAN. |
|---|---|---|---|
| 0 | 0 | 0 | CH0 |
| 0 | 0 | 1 | CH1 |
| 0 | 1 | 0 | CH2 |
| 0 | 1 | 1 | CH3 |
| 1 | 0 | 0 | CH4 |
| 1 | 0 | 1 | CH5 |
| 1 | 1 | 0 | CH6 |
| 1 | 1 | 1 | CH7 |

∗2 CODE SELECT

| CODE | CODE SELECT |
|---|---|
| 0 | BINARY DATA |
| 1 | 2'S COMPLEMENT DATA |

∗3 CLOCK RATE SELECT

| DEV1 | DEV 0 | CLOCK RATE |
|---|---|---|
| 0 | 0 | 1 |
| 0 | 1 | 1/2 |
| 1 | 0 | 1/4 |
| 1 | 1 | 1/8 |

∗4 LOW/HIGH-BYTE DATA

| | DB7 | DB 6 | DB5 | DB4 | DB3 | DB 2 | DB 1 | DB 0 |
|---|---|---|---|---|---|---|---|---|
| HIGH-BYTE | MSB | 2ND | 3RD | 4TH | 5TH | 6TH | 7TH | 8TH |
| LOW-BYTE | 9TH | 0 | 0 | 0 | 0 | 0 | 0 | 0 |

uPC648C (NEC)

## 12-BIT D/A CONVERTER WITH OPEN COLLECTOR OUTPUT
- TOP VIEW -

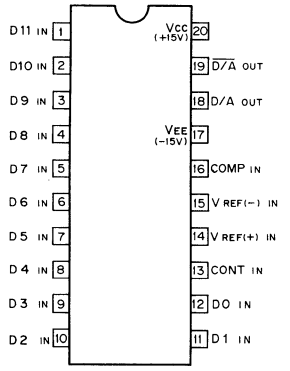
D11 IN 1
D10 IN 2
D9 IN 3
D8 IN 4
D7 IN 5
D6 IN 6
D5 IN 7
D4 IN 8
D3 IN 9
D2 IN 10
Vcc (+15V) 20
19 D/A OUT
18 D/A OUT
VEE (-15V) 17
16 COMP IN
15 V REF(-) IN
14 V REF(+) IN
13 CONT IN
12 D0 IN
11 D1 IN

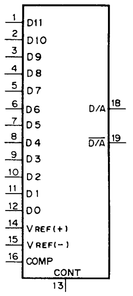
1 D11
2 D10
3 D9
4 D8
5 D7
6 D6
7 D5
8 D4
9 D3
10 D2
11 D1
12 D0
14 VREF(+)
15 VREF(-)
16 COMP
CONT 13
D/A 18
D/A 19

CONT ; THRESHOLD LEVEL CONTROL

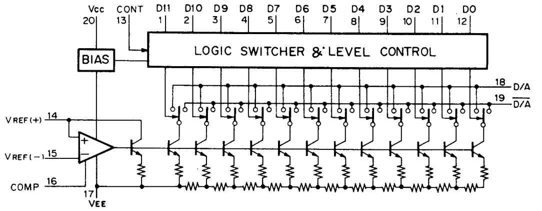
Vcc 20
CONT 13
D11 1
D10 2
D9 3
D8 4
D7 5
D6 6
D5 7
D4 8
D3 9
D2 10
D1 11
D0 12
BIAS
LOGIC SWITCHER & LEVEL CONTROL
18 D/A
19 D/A
VREF(+) 14
VREF(-) 15
COMP 16
17 VEE

CF77049N (TI)

## C-MOS VIDEO AND SYNC HEAD SIGNAL CONTROLLER
- TOP VIEW -

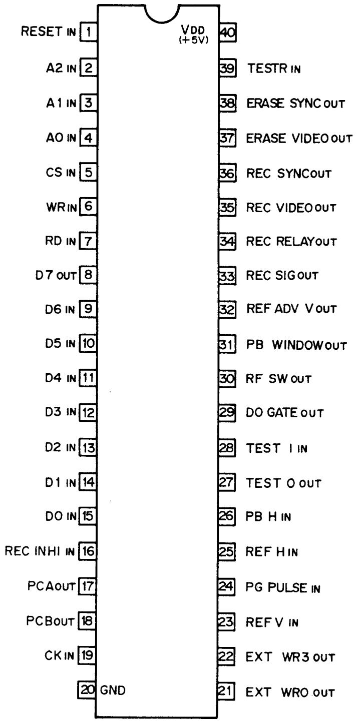
RESET IN 1
A2 IN 2
A1 IN 3
A0 IN 4
CS IN 5
WR IN 6
RD IN 7
D7 OUT 8
D6 IN 9
D5 IN 10
D4 IN 11
D3 IN 12
D2 IN 13
D1 IN 14
D0 IN 15
REC INHI IN 16
PCA OUT 17
PCB OUT 18
CK IN 19
20 GND
VDD (+5V) 40
39 TESTR IN
38 ERASE SYNC OUT
37 ERASE VIDEO OUT
36 REC SYNC OUT
35 REC VIDEO OUT
34 REC RELAY OUT
33 REC SIG OUT
32 REF ADV V OUT
31 PB WINDOW OUT
30 RF SW OUT
29 DO GATE OUT
28 TEST I IN
27 TEST O OUT
26 PB H IN
25 REF H IN
24 PG PULSE IN
23 REF V IN
22 EXT WR3 OUT
21 EXT WR0 OUT

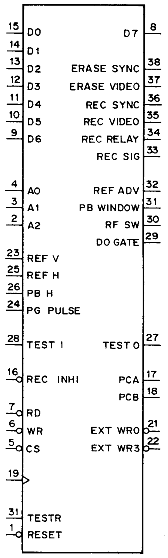
15 D0
14 D1
13 D2
12 D3
11 D4
10 D5
9 D6
D7 8
ERASE SYNC 38
ERASE VIDEO 37
REC SYNC 36
REC VIDEO 35
REC RELAY 34
REC SIG 33
4 A0
3 A1
2 A2
REF ADV 32
PB WINDOW 31
RF SW 30
DO GATE 29
23 REF V
25 REF H
26 PB H
24 PG PULSE
28 TEST I
TEST O 27
16 REC INHI
PCA 17
PCB 18
7 RD
6 WR
5 CS
EXT WR0 21
EXT WR3 22
19
31 TESTR
1 RESET

| | |
|---|---|
| D0 ~ D6; | DATA INPUTS |
| D7; | REC INHIBIT OUTPUT |
| A0 ~ A2; | COMMAND REGISTER SELECT INPUTS |
| ERASE SYNC; | SYNC ERASE HEAD CONTROL OUTPUT |
| ERASE VIDEO; | VIDEO ERASE HEAD CONTROL OUTPUT |
| REC SYNC; | SYNC HEAD CONTROL OUTPUT |
| REC VIDEO; | VIDEO HEAD CONTROL OUTPUT |
| REC RELAY; | REC RELAY CONTROL OUTPUT |
| REC SIG; | RECORD MODE OUTPUT (REC MODE=0) |
| REF AD V; | REF ADV V SIGNAL OUTPUT |
| PB WINDOW; | PB WINDOW SIGNAL OUTPUT |
| RF SW; | RF SW OUTPUT (VIDEO=1, SYNC=0) |
| DO GATE; | DROP OUT GATE SIGNAL OUTPUT |
| REF V; | REFERENCE V INPUT |
| REF H; | REFERENCE H INPUT |
| PB H; | PB H INPUT |
| PG PULSE; | PG PULSE INPUT |
| TESTO; | TEST OUTPUT (CK x 1/64) |
| TESTI; | TEST INPUT |
| PCA; | OUTPUT FOR PHASE COMPARATOR A ($\overline{\text{REF H}}$) |
| PCB; | OUTPUT FOR PHASE COMPARATOR B (CK x 1/256) |
| EXT WR0; | LATCH PULSE OUTPUT FOR EXPAND WRITE PORT |
| EXT WR3; | LATCH PULSE OUTPUT FOR EXPAND WRITE PORT |
| REC INHI; | RECORD INHIBIT INPUT |
| TESTR; | TEST RESET INPUT |
| RESET; | RESET INPUT |
| RD; | READ INPUT |
| WR; | WRITE INPUT |
| CS; | CHIP SELECT INPUT |

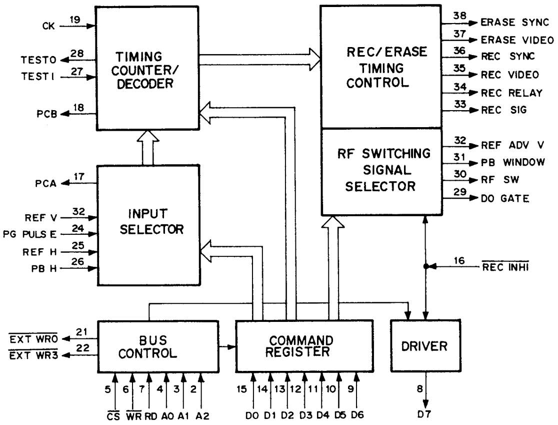
CK 19
TESTO 28
TESTI 27
PCB 18
TIMING COUNTER/ DECODER
PCA 17
REF V 32
PG PULS E 24
REF H 25
PB H 26
INPUT SELECTOR
REC/ERASE TIMING CONTROL
38 ERASE SYNC
37 ERASE VIDEO
36 REC SYNC
35 REC VIDEO
34 REC RELAY
33 REC SIG
RF SWITCHING SIGNAL SELECTOR
32 REF ADV V
31 PB WINDOW
30 RF SW
29 DO GATE
16 REC INHI
EXT WR0 21
EXT WR3 22
BUS CONTROL
COMMAND REGISTER
DRIVER
5 6 7 4 3 2
CS WR RD A0 A1 A2
15 14 13 12 11 10 9
D0 D1 D2 D3 D4 D5 D6
8
D7

ADDRESS MAP
WRITE MODE CS=WR=0 RD=1

| A2 | A1 | A0 | D7 | D6 | D5 | D4 | D3 | D2 | D1 | D0 |
|---|---|---|---|---|---|---|---|---|---|---|
| 0 | 0 | 0 | | VIDEO TEST | PB H SEL | $\overline{\text{PAL}}$/ NTSC | | | | |
| 0 | 0 | 1 | | VIDEO CONFI | SYNC REC | VIDEO REC | DT SEL | 1.5HD SEL | V+S REC | FLY ERS |
| 0 | 1 | 0 | | | | | RF SW DLY3 | RF SW DLY2 | RF SW DLY1 | RF SW DLY0 |

ADDRESS MAP
READ MODE CS=RD=0 WR=1

| A2 | A1 | A0 | D7 | D6 | D5 | D4 | D3 | D2 | D1 | D0 |
|---|---|---|---|---|---|---|---|---|---|---|
| 0 | 0 | 0 | REC INHI | | | | | | | |

EXTWR0, EXTWR3

| A2 | A1 | A0 | CS | WR | EXTWR0 | EXWR 3 |
|---|---|---|---|---|---|---|
| 0 | 0 | 0 | 0 | 0 | 0 | 1 |
| 0 | 1 | 1 | 0 | 0 | 1 | 0 |
| THE OTHERS | | | | | 1 | 1 |

0; LOW LEVEL
1; HIGH LEVEL

## CF77074NT (TI)

## CLOCK COUNTER

- TOP VIEW -

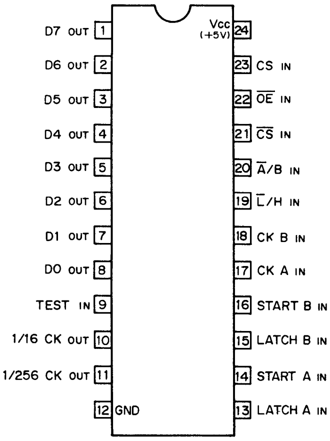
D7 OUT 1
D6 OUT 2
D5 OUT 3
D4 OUT 4
D3 OUT 5
D2 OUT 6
D1 OUT 7
D0 OUT 8
TEST IN 9
1/16 CK OUT 10
1/256 CK OUT 11
12 GND
Vcc (+5V) 24
23 CS IN
22 $\overline{\mathrm{OE}}$ IN
21 $\overline{\mathrm{CS}}$ IN
20 $\overline{\mathrm{A}}$/B IN
19 $\overline{\mathrm{L}}$/H IN
18 CK B IN
17 CK A IN
16 START B IN
15 LATCH B IN
14 START A IN
13 LATCH A IN

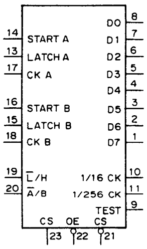
14 START A
13 LATCH A
17 CK A
16 START B
15 LATCH B
18 CK B
19 $\overline{\mathrm{L}}$/H
20 $\overline{\mathrm{A}}$/B
D0 8
D1 7
D2 6
D3 5
D4 4
D5 3
D6 2
D7 1
1/16 CK 10
1/256 CK 11
TEST 9
CS 23
OE 22
CS 21

$\overline{\mathrm{A}}$/B ; DATA LATCH A/B SELECT INPUT
CKA,CKB; CLOCK INPUT
(⨍ → COUNT UP
⨍ → LATCH)
CS ; CHIP SELECT INPUT
D0-D7 ; DATA OUTPUT
$\overline{\mathrm{L}}$/H ; DATA LATCH LOW/HIGH SELECT INPUT
OE ; OUTPUT ENABLE INPUT

MODE SELECT

| INPUT | | | | | OUTPUT |
|---|---|---|---|---|---|
| CS | $\overline{\mathrm{CS}}$ | $\overline{\mathrm{OE}}$ | $\overline{\mathrm{A}}$/B | $\overline{\mathrm{L}}$/H | D0-D7 |
| 0 | X | X | X | X | HI-Z |
| 1 | 0 | 0 | 0 | 0 | LATCH A LOW BYTE |
| 1 | 0 | 0 | 0 | 1 | LATCH A HIGH BYTE |
| 1 | 0 | 0 | 1 | 0 | LATCH B LOW BYTE |
| 1 | 0 | 0 | 1 | 1 | LATCH B HIGH BYTE |
| X | 1 | X | X | X | HI-Z |
| X | X | 1 | X | X | |

0; LOW LEVEL
1; HIGH LEVEL
X; DON'T CARE
HI-Z; HIGH IMPEDANCE

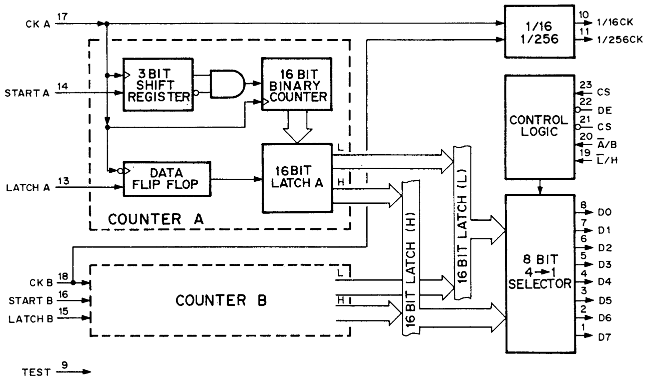
CK A 17
START A 14
LATCH A 13
3 BIT SHIFT REGISTER
16 BIT BINARY COUNTER
DATA FLIP FLOP
16BIT LATCH A
L
H
COUNTER A
CK B 18
START B 16
LATCH B 15
COUNTER B
L
H
TEST 9
1/16 1/256
10 1/16CK
11 1/256CK
CONTROL LOGIC
23 CS
22 OE
21 CS
20 $\overline{\mathrm{A}}$/B
19 $\overline{\mathrm{L}}$/H
16 BIT LATCH (L)
16 BIT LATCH (H)
8 BIT 4→1 SELECTOR
8 D0
7 D1
6 D2
5 D3
4 D4
3 D5
2 D6
1 D7

## DASH012 (SONY)

## C-MOS PULSE TRAIN CONTROLLER

- TOP VIEW -

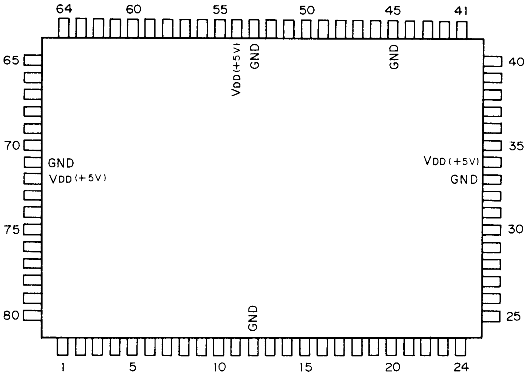
64
60
55
50
45
41
65
70
75
80
40
35
30
25
1
5
10
15
20
24
VDD(+5V)
GND
GND
GND
VDD(+5V)
VDD(+5V)
GND
GND

| PIN No. | I/O | SYMBOL | PIN No. | I/O | SYMBOL | PIN No. | I/O | SYMBOL | PIN No. | I/O | SYMBOL |
|---|---|---|---|---|---|---|---|---|---|---|---|
| 1 | I | 192F | 21 | O | RC46 | 41 | O | RC37 | 61 | O | RC5 |
| 2 | I | SYNC | 22 | O | RC22 | 42 | O | RC13 | 62 | O | RC29 |
| 3 | O | GOR | 23 | O | RC45 | 43 | O | RCCT | 63 | O | RC4 |
| 4 | I | RCON | 24 | O | RC21 | 44 | O | RC12 | 64 | O | RC28 |
| 5 | I | ONCT | 25 | O | RC44 | 45 | O | GND | 65 | O | RC3 |
| 6 | O | MONI | 26 | O | RC20 | 46 | O | RC36 | 66 | O | RC27 |
| 7 | O | TS0 | 27 | O | RC43 | 47 | O | RC11 | 67 | O | RC2 |
| 8 | O | TS1 | 28 | O | RC19 | 48 | O | RC35 | 68 | O | RC26 |
| 9 | O | TS2 | 29 | O | RC42 | 49 | O | RC10 | 69 | O | RC1 |
| 10 | O | TS3 | 30 | O | RC18 | 50 | O | RC34 | 70 | O | RC25 |
| 11 | O | RCK1 | 31 | O | RC41 | 51 | O | RC9 | 71 | – | GND |
| 12 | – | GND | 32 | O | RC17 | 52 | O | RC33 | 72 | – | VDD(+5V) |
| 13 | O | RCK2 | 33 | – | GND | 53 | – | GND | 73 | I | G1 |
| 14 | O | 48F | 34 | – | VDD(+5V) | 54 | – | VDD(+5V) | 74 | I | G2B |
| 15 | O | 24FB | 35 | O | RC40 | 55 | O | RC8 | 75 | I | G3B |
| 16 | O | RC48 | 36 | O | RC16 | 56 | O | RC32 | 76 | I | G4B |
| 17 | O | RC24 | 37 | O | RC39 | 57 | O | RC7 | 77 | O | G3G4 |
| 18 | O | RC47 | 38 | O | RC15 | 58 | O | RC31 | 78 | I | RST |
| 19 | O | RC23 | 39 | O | RC38 | 59 | O | RC6 | 79 | I | MODE |
| 20 | | GND | 40 | O | RC14 | 60 | O | RC30 | 80 | I | TSSL |

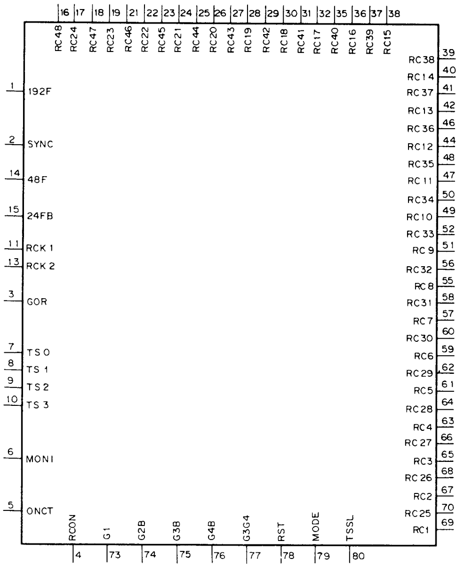
16 RC48
17 RC24
18 RC47
19 RC23
21 RC46
22 RC22
23 RC45
24 RC21
25 RC44
26 RC20
27 RC43
28 RC19
29 RC42
30 RC18
31 RC41
32 RC17
35 RC40
36 RC16
37 RC39
38 RC15
1 192F
2 SYNC
14 48F
15 24FB
11 RCK 1
13 RCK 2
3 GOR
7 TS0
8 TS1
9 TS2
10 TS3
6 MONI
5 ONCT
RC38 39
RC14 40
RC37 41
RC13 42
RC36 46
RC12 44
RC35 48
RC11 47
RC34 50
RC10 49
RC33 52
RC9 51
RC32 56
RC8 55
RC31 58
RC7 57
RC30 60
RC6 59
RC29 62
RC5 61
RC28 64
RC4 63
RC27 66
RC3 65
RC26 68
RC2 67
RC25 70
RC1 69
RCON 4
G1 73
G2B 74
G3B 75
G4B 76
G3G4 77
RST 78
MODE 79
TSSL 80

192F : CLOCK INPUT (FS × 192)
24FB : CLOCK INPUT (FS × 24)
48F : CLOCK INPUT (FS × 48)
GOR : REC INHIBIT SIGNAL OUTPUT
G1, G3G4 : NEGATIVE NOR INPUTS
MODE : L : PULSE TRAIN TIMING
H : STATUS SIGNAL ON/OFF
MONI : SERIAL OUTPUT (1 SYNC DELAY)
ONCT : REC ON/OFF SIGNAL INPUT
RC1 – RC48 : PULSE TRAIN CONTROL SIGNAL OUTPUTS
RCON : SERIAL CONTROL SIGNAL INPUT (FOR REC ON/OFF)
RCK2, 1 : CLOCK OUTPUTS (FOR LATCH)
RST : POWER-ON RESET INPUT
SYNC : WORD SYNC SIGNAL INPUT
TSSL : 2CH/4CH SELECT INPUT ("L" : 2CH)
TS0 – TS3 : TIMING PULSE OUTPUTS

MC34051P (MOTOROLA)

RS-422 DRIVER/RECEIVER

- TOP VIEW -

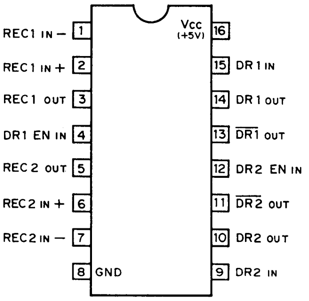
REC1 IN −
REC1 IN +
REC1 OUT
DR1 EN IN
REC2 OUT
REC2 IN +
REC2 IN −
GND
Vcc (+5V)
DR1 IN
DR1 OUT
$\overline{DR1}$ OUT
DR2 EN IN
$\overline{DR2}$ OUT
DR2 OUT
DR2 IN
1
2
3
4
5
6
7
8
9
10
11
12
13
14
15
16

| DR EN | MODE |
|---|---|
| 0 | DISABLE |
| 1 | ENABLE |

0 ; LOW LEVEL
1 ; HIGH LEVEL

DR ; DRIVER
DR EN ; DRIVER ENABLE
REC ; RECEIVER

DRIVER CIRCUIT

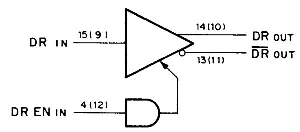
DR IN
15(9)
14(10)
DR OUT
13(11)
$\overline{DR}$ OUT
DR EN IN
4(12)

RECEIVER CIRCUIT

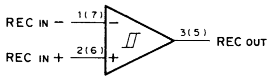
REC IN −
1(7)
REC IN +
2(6)
3(5)
REC OUT

AM26LS30PC (ADVANCED MICRO DEVICES)

LINE DRIVER

- TOP VIEW -

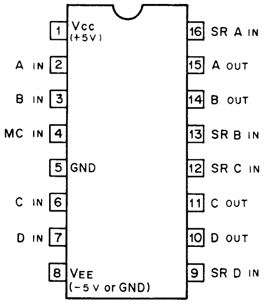
Vcc (+5V)
A IN
B IN
MC IN
GND
C IN
D IN
VEE (−5 V or GND)
SR A IN
A OUT
B OUT
SR B IN
SR C IN
C OUT
D OUT
SR D IN
1
2
3
4
5
6
7
8
9
10
11
12
13
14
15
16

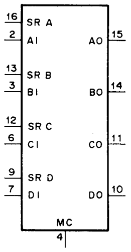
16
SR A
2
AI
AO
15
13
SR B
3
BI
BO
14
12
SR C
6
CI
CO
11
9
SR D
7
DI
DO
10
MC
4

MC ; MODE CONTROL
SR ; SLEW RATE CONTROL

MC=1

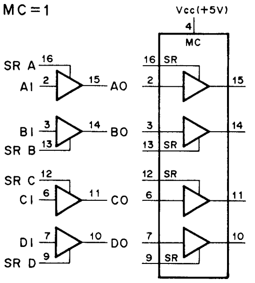
SR A
AI
AO
BI
BO
SR B
SR C
CI
CO
DI
DO
SR D
Vcc(+5V)
4
MC
SR
16
2
15
3
14
13
12
6
11
7
10
9

MC=0

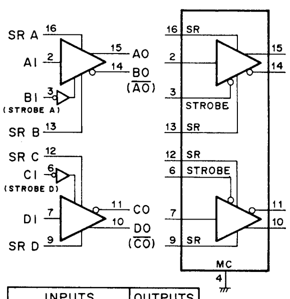
SR A
AI
AO
BO
($\overline{AO}$)
BI
(STROBE A)
SR B
SR C
CI
(STROBE D)
DI
CO
DO
($\overline{CO}$)
SR D
SR
STROBE
MC
4
16
2
15
14
3
13
12
6
11
10
7
9

| INPUTS | | OUTPUTS |
|---|---|---|
| MC | A TO D | A TO D |
| 1 | 0 | 0 |
| 1 | 1 | 1 |

| INPUTS | | | OUTPUTS | |
|---|---|---|---|---|
| MC | STROBE | A & D | A & D | B & C |
| 0 | 0 | 0 | 0 | 1 |
| 0 | 0 | 1 | 1 | 0 |
| 0 | 1 | X | HI-Z | HI-Z |

0; LOW LEVEL
1; HIGH LEVEL
X; DON'T CARE
HI-Z; HIGH IMPEDANCE

AM26LS31PC (ADVANCED MICRO DEVICE)

HIGH SPEED DIFFERENTIAL LINE DRIVER

- TOP VIEW -

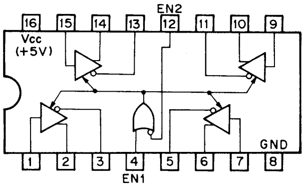
EN2
Vcc (+5V)
GND
EN1
16
15
14
13
12
11
10
9
1
2
3
4
5
6
7
8

FUNCTION TABLE

| EN2 | EN1 | OUTPUT |
|---|---|---|
| 0 | 0 | ENABLE |
| 0 | 1 | ENABLE |
| 1 | 0 | HI-Z |
| 1 | 1 | ENABLE |

0 ; LOW LEVEL
1 ; HIGH LEVEL
HI-Z ; HIGH IMPEDANCE

AM26LS32PC (ADVANCED MICRO DEVICES)

HIGH SPEED DIFFERENTIAL LINE RECEIVER

- TOP VIEW -

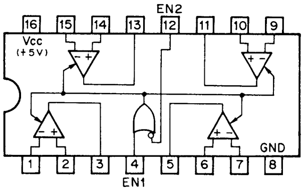
EN2
Vcc (+5V)
GND
EN1
16
15
14
13
12
11
10
9
1
2
3
4
5
6
7
8

FUNCTION TABLE

| EN2 | EN1 | OUTPUT |
|---|---|---|
| 0 | 0 | ENABLE |
| 0 | 1 | ENABLE |
| 1 | 0 | HI-Z |
| 1 | 1 | ENABLE |

0; LOW LEVEL
1 ; HIGH LEVEL
HI-Z ; HIGH IMPEDANCE

| | SENSE | INPUT VOLT |
|---|---|---|
| LS32 | ±200mV | ±7V |
| LS33 | ±500mV | ±15V |

AM6685DL (ADVANCED MICRO DEVICES)

VOLTAGE COMPARATOR

(BUILT-IN LATCH)

- TOP VIEW -

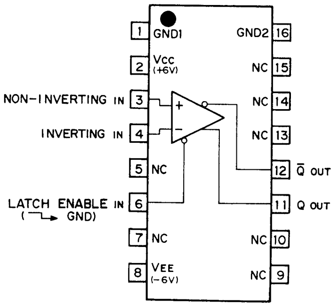
GND1
Vcc (+6V)
NON-INVERTING IN
INVERTING IN
NC
LATCH ENABLE IN
GND)
NC
VEE (−6V)
GND2
NC
NC
NC
$\overline{Q}$ OUT
Q OUT
NC
NC
1
2
3
4
5
6
7
8
9
10
11
12
13
14
15
16

CA3080E (RCA)

OPERATIONAL AMPLIFIER

- TOP VIEW -

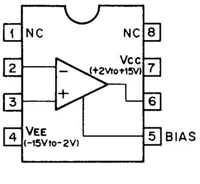
NC
VEE (−15V to −2V)
NC
Vcc (+2V to +15V)
BIAS
1
2
3
4
5
6
7
8

## HI1-0201-5 (HARRIS)

C-MOS ANALOG SWITCH
- TOP VIEW -

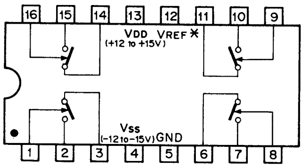
16
15
14
13
12
11
10
9
VDD VREF ✱
(+12 to +15V)
Vss
(-12 to -15V) GND
1
2
3
4
5
6
7
8

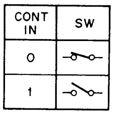
CONT IN
SW
0
1

0 ; LOW LEVEL
1 ; HIGH LEVEL

✱NOTE

| INTERFACIAL DEVICE | | VREF CONNECTION |
|---|---|---|
| TTL | | Open |
| C-MOS | VDD ≦ 5.5V | Open |
| | VDD > 5.5V | To VDD of interfacial IC |

## LM2903DQ (RAYTHEON)
## uPC393C (NEC)

VOLTAGE COMPARATOR
- TOP VIEW -

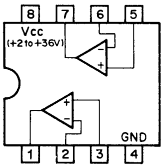
8
7
6
5
Vcc
(+2 to +36V)
GND
1
2
3
4

## LT1028CN8 (LINEAR TECHNOLOGY)

OPERATIONAL AMPLIFIER
- TOP VIEW -

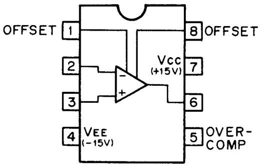
OFFSET 1
2
3
4
VEE
(-15V)
8 OFFSET
Vcc
(+15V)
7
6
5 OVER-COMP

## M5201L (MITSUBISHI)

GENERAL PURPOSE SWITCHING OP AMPLIFIER (2 INPUTS, 1 OUTPUT)
- TOP VIEW -

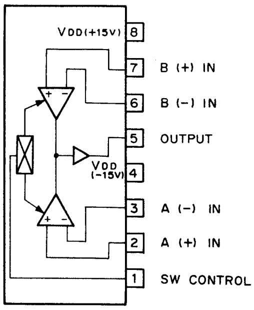
VDD (+15V) 8
7 B (+) IN
6 B (-) IN
5 OUTPUT
VDD (-15V) 4
3 A (-) IN
2 A (+) IN
1 SW CONTROL

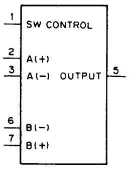
1 SW CONTROL
2 A(+)
3 A(-)
OUTPUT 5
6 B(-)
7 B(+)

## MC5400 (SONY)

CHARGE PUMP FOR PLL
- PRINTED SIDE VIEW -

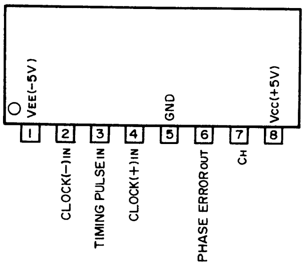
VEE(-5V)
GND
Vcc(+5V)
1
2
3
4
5
6
7
8
CLOCK(-)IN
TIMING PULSE IN
CLOCK(+)IN
PHASE ERROR OUT
CH

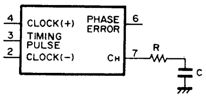
4 CLOCK(+)
3 TIMING PULSE
2 CLOCK(-)
PHASE ERROR 6
CH 7
R
C

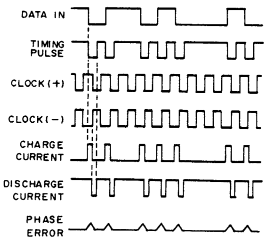

## MP4001 (TOSHIBA)

DARLINGTON TRANSISTOR ARRAY
- PRINTED SIDE VIEW -

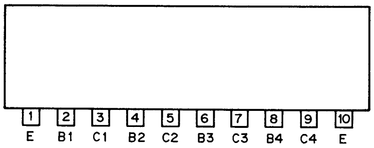
1 E
2 B1
3 C1
4 B2
5 C2
6 B3
7 C3
8 B4
9 C4
10 E

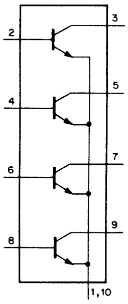
2
3
4
5
6
7
8
9
1,10

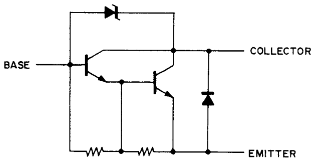
BASE
COLLECTOR
EMITTER

1 , 10 EMITTER
2 , 4 , 6 , 8 BASE
3 , 5 , 7 , 9 COLLECTOR

## MP4504 (TOSHIBA)

DARLINGTON TRANSISTOR ARRAY
- PRINTED SIDE VIEW -

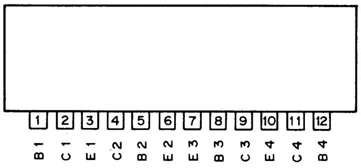
1 B1
2 C1
3 E1
4 C2
5 B2
6 E2
7 E3
8 B3
9 C3
10 E4
11 C4
12 B4

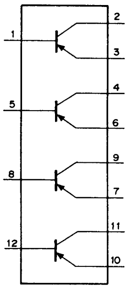
1
2
3
5
4
6
8
9
7
12
11
10

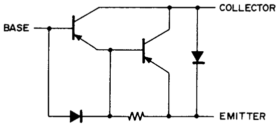
BASE
COLLECTOR
EMITTER

## MP6901 (TOSHIBA)

POWER TRANSISTOR ARRAY
- PRINTED SIDE VIEW -

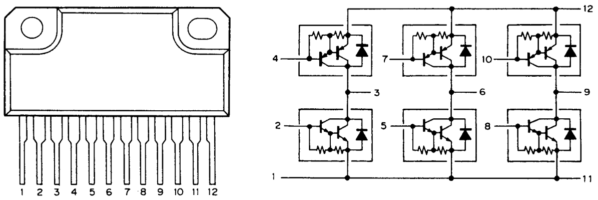
1 2 3 4 5 6 7 8 9 10 11 12
4
7
10
12
3
6
9
2
5
8
1
11

## MSL915RS (OKI)

VACUUM FLUORESCENT DISPLAY DRIVER
- TOP VIEW -

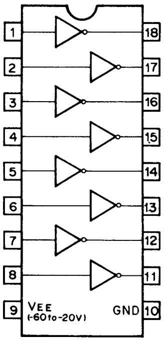
1
2
3
4
5
6
7
8
9
VEE
(-60to-20V)
GND
10
11
12
13
14
15
16
17
18

## MSL9510RS (OKI)

8-BIT DIGIT SCAN COUNTER/DECODER
FOR FLUORESCENT DISPLAY (OPEN COLLECTOR)
- TOP VIEW -

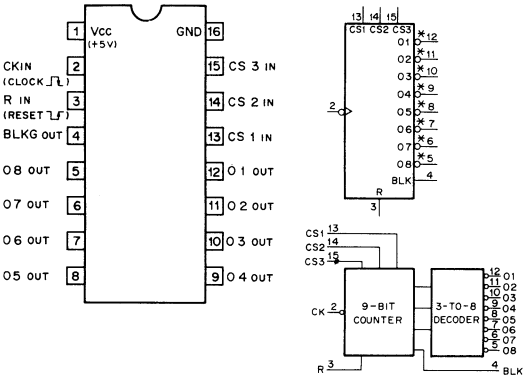
1 Vcc (+5V)
GND 16
CKIN (CLOCK) 2
15 CS 3 IN
R IN (RESET) 3
14 CS 2 IN
BLKG OUT 4
13 CS 1 IN
O8 OUT 5
12 O 1 OUT
O7 OUT 6
11 O 2 OUT
O6 OUT 7
10 O 3 OUT
O5 OUT 8
9 O 4 OUT
13 14 15
CS1 CS2 CS3
O1 *12
O2 *11
O3 *10
O4 *9
O5 *8
O6 *7
O7 *6
O8 *5
BLK 4
R 3
2
CS1 13
CS2 14
CS3 15
CK 2
9-BIT COUNTER
3-TO-8 DECODER
R 3
12 O1
11 O2
10 O3
9 O4
8 O5
7 O6
6 O7
5 O8
4 BLK

### OUTPUT TIMING (WHEN CS1·CS2·CS3 = LOW)

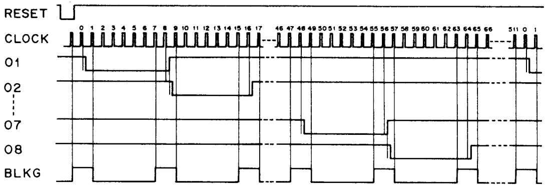

### FUNCTION TABLE

| CS1 | 0 | 1 | 0 | 1 | 0 | 1 | 0 | 1 |
|---|---|---|---|---|---|---|---|---|
| CS2 | 0 | 0 | 1 | 1 | 0 | 0 | 1 | 1 |
| CS3<br>CLOCK | 0 | 0 | 0 | 0 | 1 | 1 | 1 | 1 |
| 0～63 | ○ | | | | | | | |
| 64～127 | | ○ | | | | | | |
| 128～191 | | | ○ | | | | | |
| 192～255 | | | | ○ | | | | |
| 256～319 | | | | | ○ | | | |
| 320～383 | | | | | | ○ | | |
| 384～447 | | | | | | | ○ | |
| 448～511 | | | | | | | | ○ |

0 : LOW LEVEL
1 : HIGH LEVEL

ROUND "○" : COUNT
BLANK : NO COUNT

### DETAIL OF OUTPUT TIMING (RL = 7KΩ)

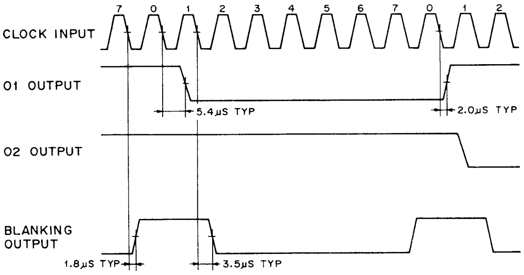

### RESET TIMING

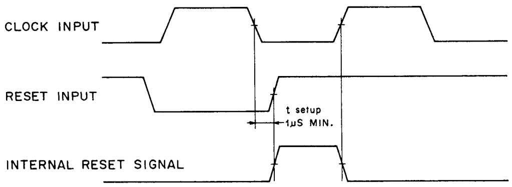

## NJM2082S (JRC)

DUAL OPERATIONAL AMPLIFIER
- SIDE VIEW -

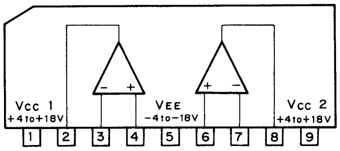
Vcc 1
+4to+18V
VEE
-4to-18V
Vcc 2
+4to+18V
1 2 3 4 5 6 7 8 9

## NJM4560S (JRC)
## RC4556S (RAYTHEON)

HIGH PERFORMANCE DUAL OPERATIONAL AMPLIFIER
- SIDE VIEW -

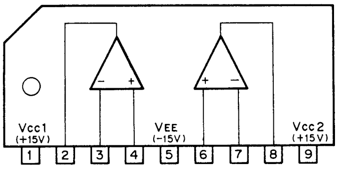
Vcc1
(+15V)
VEE
(-15V)
Vcc2
(+15V)
1 2 3 4 5 6 7 8 9

## RC4558DQ (RAYTHEON)
## uPC4558C (NEC)

OPERATIONAL AMPLIFIER
- TOP VIEW -

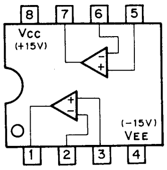
8 7 6 5
Vcc
(+15V)
(-15V)
VEE
1 2 3 4

RC4560D (RAYTHEON)
OPERATIONAL AMPLIFIER
- TOP VIEW -

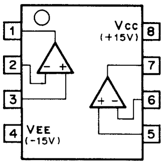
1
2
3
4
Vcc
(+15V)
VEE
(-15V)
8
7
6
5

TL082CP (TI)
uPC4082C (NEC)
OPERATIONAL AMPLIFIER
(J FET-INPUT)
- TOP VIEW -

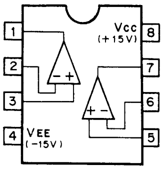
1
2
3
4
Vcc
(+15V)
VEE
(-15V)
8
7
6
5

TL607CP (TI)
P-MOS ANALOG SWITCH
- TOP VIEW -

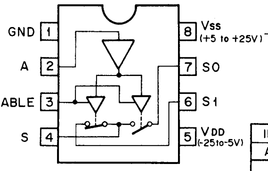
GND 1
A 2
ENABLE 3
S 4
8 Vss (+5 to +25V)
7 SO
6 S1
5 VDD (-25to-5V)

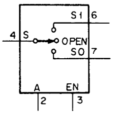
S1 6
4 S
OPEN
SO 7
A
EN
2
3

| INPUTS | | SW |
|---|---|---|
| A | EN | |
| X | 0 | 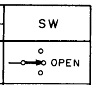 OPEN |
| 0 | 1 | 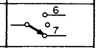 6<br>7 |
| 1 | 1 | 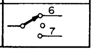 6<br>7 |

0;LOW LEVEL
1;HIGH LEVEL
X;DON'T CARE

uPC311C (NEC)
VOLTAGE COMPARATOR
- TOP VIEW -

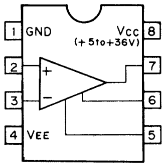
1 GND
2
3
4 VEE
Vcc
(+5to+36V)
8
7
6
5

uPC319C (NEC)
DUAL VOLTAGE COMPARATOR
- TOP VIEW -

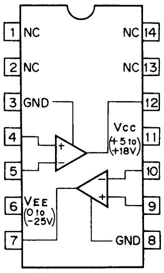
1 NC
2 NC
3 GND
4
5
6 VEE (0 to -25V)
7
NC 14
NC 13
12
Vcc (+5 to +18V) 11
10
9
GND 8

uPC339C (NEC)
COMPARATOR
- TOP VIEW -

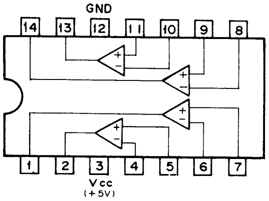
GND
14
13
12
11
10
9
8
1
2
3
4
5
6
7
Vcc
(+5V)

uPC358C (NEC)
DUAL OPERATIONAL AMPLIFIERS
- TOP VIEW -

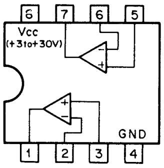
8
7
6
5
Vcc
(+3to+30V)
GND
1
2
3
4

uPC649C (NEC)
SAMPLE AND HOLD CIRCUIT
- TOP VIEW -

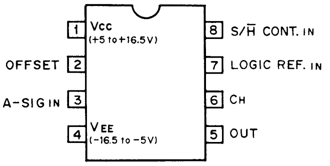
1 Vcc (+5 to +16.5V)
OFFSET 2
A-SIG IN 3
4 VEE (-16.5 to -5V)
8 S/H CONT. IN
7 LOGIC REF. IN
6 CH
5 OUT

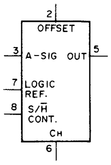
2
OFFSET
3
A-SIG
OUT
5
7
LOGIC REF.
8
S/H CONT.
CH
6

S/H CONT. ; SAMPLE/HOLD CONTROL
CH ; EXTERNAL HOLD CAPACITOR

uPC1663C (NEC)
WIDEBAND VIDEO AMPLIFIER
- TOP VIEW -

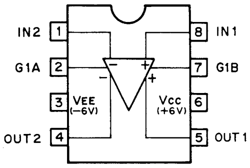
IN2 1
G1A 2
3 VEE (-6V)
OUT2 4
8 IN1
7 G1B
Vcc (+6V) 6
5 OUT1

uPC4084C (NEC)
OPERATIONAL AMPLIFIER
(J FET-INPUT)
- TOP VIEW -

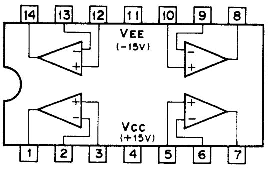
14
13
12
11
10
9
8
VEE
(-15V)
Vcc
(+15V)
1
2
3
4
5
6
7

uPD70320L-8 (NEC)

C-MOS 16-BIT MICROPROCESSOR
– TOP VIEW –

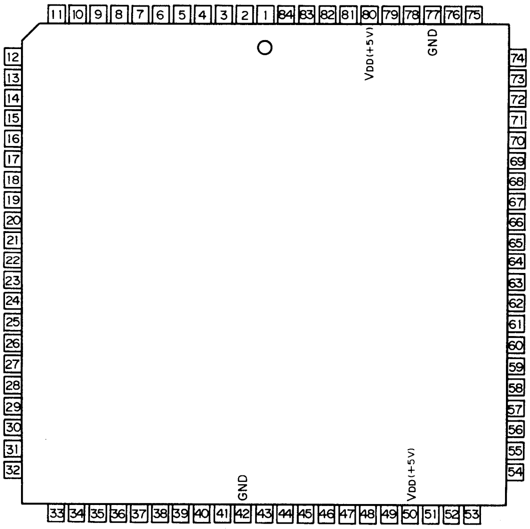
VDD(+5V)
GND
GND
VDD(+5V)
11 10 9 8 7 6 5 4 3 2 1 84 83 82 81 80 79 78 77 76 75
12 13 14 15 16 17 18 19 20 21 22 23 24 25 26 27 28 29 30 31 32
33 34 35 36 37 38 39 40 41 42 43 44 45 46 47 48 49 50 51 52 53
74 73 72 71 70 69 68 67 66 65 64 63 62 61 60 59 58 57 56 55 54

| PIN No. | I/O | SYMBOL | PIN No. | I/O | SYMBOL | PIN No. | I/O | SYMBOL |
|---|---|---|---|---|---|---|---|---|
| 1 | O | IOSTB | 29 | O | A8 | 57 | I/O | P26/HLDAK |
| 2 | O | MREQ | 30 | O | A9 | 58 | I/O | P27/HLDRQ |
| 3 | I | EA | 31 | O | A10 | 59 | I/O | P10/NMI |
| 4 | I/O | P00 | 32 | O | A11 | 60 | I/O | P11/INTP0 |
| 5 | I/O | P01 | 33 | O | A12 | 61 | I/O | P12/INTP1 |
| 6 | I/O | P02 | 34 | O | A13 | 62 | I/O | P13/INTP2/INTAK |
| 7 | I/O | P03 | 35 | O | A14 | 63 | I/O | P14/INT/POLL |
| 8 | I/O | P04 | 36 | O | A15 | 64 | I/O | P15/TOUT |
| 9 | — | IC | 37 | O | A16 | 65 | I/O | P16/SCKO |
| 10 | I/O | P05 | 38 | O | A17 | 66 | I/O | P17/READY |
| 11 | I/O | P06 | 39 | O | A18 | 67 | I | PT0 |
| 12 | I/O | P07/CLKOUT | 40 | O | A19 | 68 | I | PT1 |
| 13 | I/O | D0 | 41 | I | RXD0 | 69 | I | PT2 |
| 14 | I/O | D1 | 42 | — | GND | 70 | I | PT3 |
| 15 | I/O | D2 | 43 | I/O | CTS0 | 71 | I | PT4 |
| 16 | I/O | D3 | 44 | O | TXD0 | 72 | I | PT5 |
| 17 | I/O | D4 | 45 | I | RXD1 | 73 | I | PT6 |
| 18 | I/O | D5 | 46 | I | CTS1 | 74 | I | PT7 |
| 19 | I/O | D6 | 47 | O | TXD1 | 75 | — | IC |
| 20 | I/O | D7 | 48 | I/O | P20/DMARQ0 | 76 | I | $V_{TH}$ |
| 21 | O | A0 | 49 | — | IC | 77 | — | GND |
| 22 | O | A1 | 50 | I | $V_{DD}$(+5V) | 78 | — | X1 |
| 23 | O | A2 | 51 | I/O | P21/DMAAK0 | 79 | — | X2 |
| 24 | O | A3 | 52 | I/O | P22/TC0 | 80 | I | $V_{DD}$(+5V) |
| 25 | O | A4 | 53 | — | IC | 81 | I | RESET |
| 26 | O | A5 | 54 | I/O | P23/DMARQ1 | 82 | O | REFRQ |
| 27 | O | A6 | 55 | I/O | P24/DMAAK1 | 83 | O | R/W |
| 28 | O | A7 | 56 | I/O | P25/TC1 | 84 | O | MSTB |

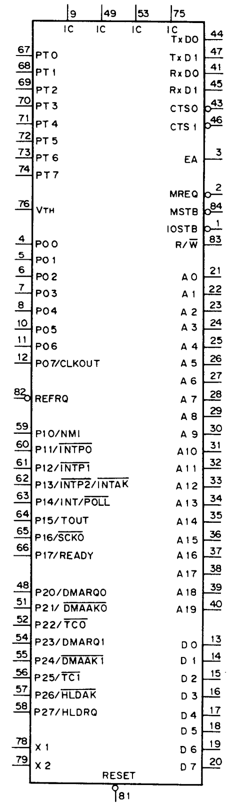
9 IC
49 IC
53 IC
75 IC
67 PT0
68 PT1
69 PT2
70 PT3
71 PT4
72 PT5
73 PT6
74 PT7
76 VTH
4 P00
5 P01
6 P02
7 P03
8 P04
10 P05
11 P06
12 P07/CLKOUT
82 REFRQ
59 P10/NMI
60 P11/INTP0
61 P12/INTP1
62 P13/INTP2/INTAK
63 P14/INT/POLL
64 P15/TOUT
65 P16/SCKO
66 P17/READY
48 P20/DMARQ0
51 P21/DMAAK0
52 P22/TC0
54 P23/DMARQ1
55 P24/DMAAK1
56 P25/TC1
57 P26/HLDAK
58 P27/HLDRQ
78 X1
79 X2
TxD0 44
TxD1 47
RxD0 41
RxD1 45
CTS0 43
CTS1 46
EA 3
MREQ 2
MSTB 84
IOSTB 1
R/W 83
A0 21
A1 22
A2 23
A3 24
A4 25
A5 26
A6 27
A7 28
A8 29
A9 30
A10 31
A11 32
A12 33
A13 34
A14 35
A15 36
A16 37
A17 38
A18 39
A19 40
D0 13
D1 14
D2 15
D3 16
D4 17
D5 18
D6 19
D7 20
RESET 81

A0 – A19 ; ADDRESS BUS OUTPUTS
CLKOUT ; SYSTEM CLOCK OUTPUT
CTS0, CTS1 ; CLEAR TO SEND INPUT/OUTPUT
D0 – D7 ; DATA BUS INPUTS/OUTPUTS
DMAAK0, DMAAK1 ; DMA ACKNOWLEDGE CH0, CH1 OUTPUTS
DMARQ0, DMARQ1 ; DMA REQUEST CH0, CH1 INPUTS
EA ; ROM-LESS MODE SET INPUT
HLDAK ; HOLD ACKNOWLEDGE OUTPUT
HLDRQ ; HOLD REQUEST INPUT
IC ; INTERNAL CONNECT
INTP0, INTP1 ; INTERRUPT REQUEST INPUTS
INTP2 ; INTERRUPT REQUEST INPUT
INTAK ; INTERRUPT ACKNOWLEDGE OUTPUT
IOSTB ; I/O READ/WRITE STROBE OUTPUT
MREQ ; MEMORY REQUEST OUTPUT
MSTB ; MEMORY READ/WRITE STROBE OUTPUT
NMI ; NON-MASKABLE INTERRUPT INPUT
P00 – P07 ; PORT 0 INPUTS/OUTPUTS
P10 – P17 ; PORT 1 INPUTS/OUTPUTS
P20 – P27 ; PORT 2 INPUTS/OUTPUTS
PT0 – PT7 ; PORT 0 INPUTS
INT/$\overline{\text{POLL}}$ ; INTERRUPT REQUEST INPUT
READY ; READY INPUT
REFRQ ; REFRESH REQUEST OUTPUT
RESET ; RESET INPUT
R/$\overline{\text{W}}$ ; READ AND WRITE CYCLE OUTPUT
RXD0, RXD1 ; SERIAL DATA INPUTS
SCKO ; SERIAL CLOCK OUTPUT
TC0, TC1 ; DMA (CH0/CH1) ENDING OUTPUTS
TOUT ; TIMER OUTPUT
TXD0, TXD1 ; SERIAL DATA OUTPUTS
$V_{TH}$ ; REF. V FOR COMPARATOR INPUT
X1, X2 ; CRYSTAL 1, 2

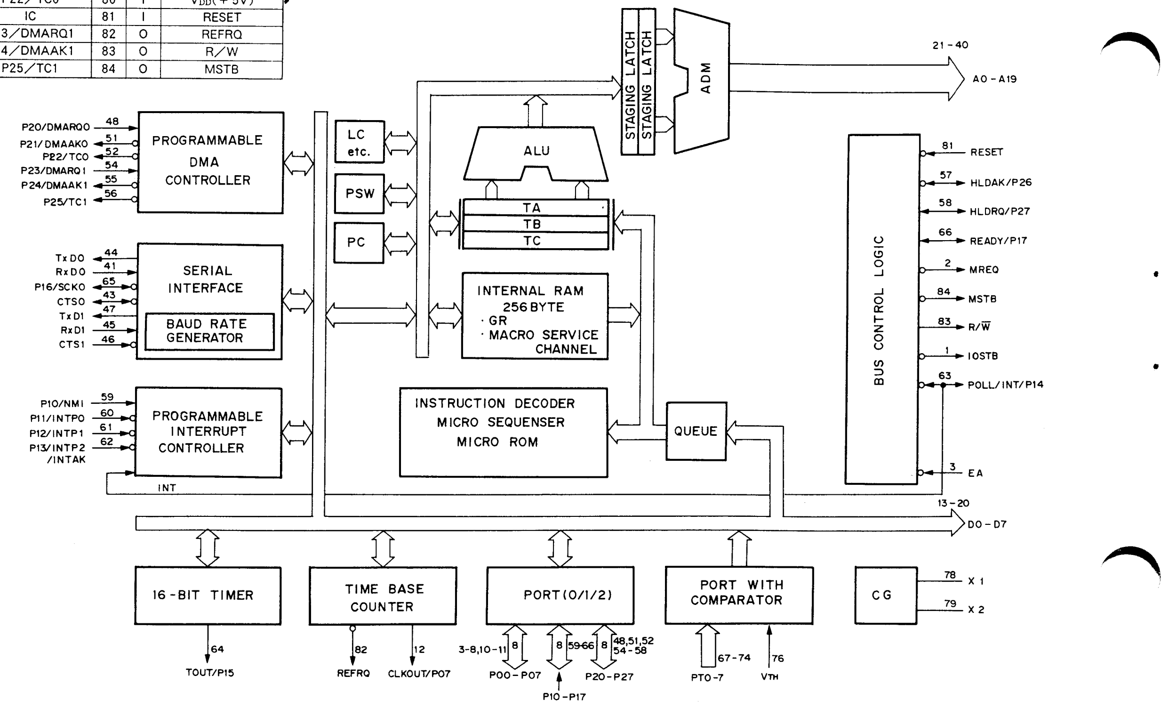
P20/DMARQ0 48
P21/DMAAK0 51
P22/TC0 52
P23/DMARQ1 54
P24/DMAAK1 55
P25/TC1 56
PROGRAMMABLE DMA CONTROLLER
TxD0 44
RxD0 41
P16/SCKO 65
CTS0 43
TxD1 47
RxD1 45
CTS1 46
SERIAL INTERFACE
BAUD RATE GENERATOR
P10/NMI 59
P11/INTP0 60
P12/INTP1 61
P13/INTP2 /INTAK 62
PROGRAMMABLE INTERRUPT CONTROLLER
INT
LC etc.
PSW
PC
STAGING LATCH
STAGING LATCH
ADM
ALU
TA
TB
TC
INTERNAL RAM 256 BYTE
· GR
· MACRO SERVICE CHANNEL
INSTRUCTION DECODER
MICRO SEQUENSER
MICRO ROM
QUEUE
21-40
A0 - A19
BUS CONTROL LOGIC
81 RESET
57 HLDAK/P26
58 HLDRQ/P27
66 READY/P17
2 MREQ
84 MSTB
83 R/W
1 IOSTB
63 POLL/INT/P14
3 EA
13-20
D0 - D7
16-BIT TIMER
TIME BASE COUNTER
PORT (0/1/2)
PORT WITH COMPARATOR
CG
78 X1
79 X2
64 TOUT/P15
82 REFRQ
12 CLKOUT/P07
3-8,10-11 8 P00-P07
8 59-66 P10-P17
8 48,51,52 54-58 P20-P27
67-74 PT0-7
76 VTH

uPD7201AC (NEC)

N-MOS MULTI-PROTOCOL SERIAL CONTROLLER
- TOP VIEW -

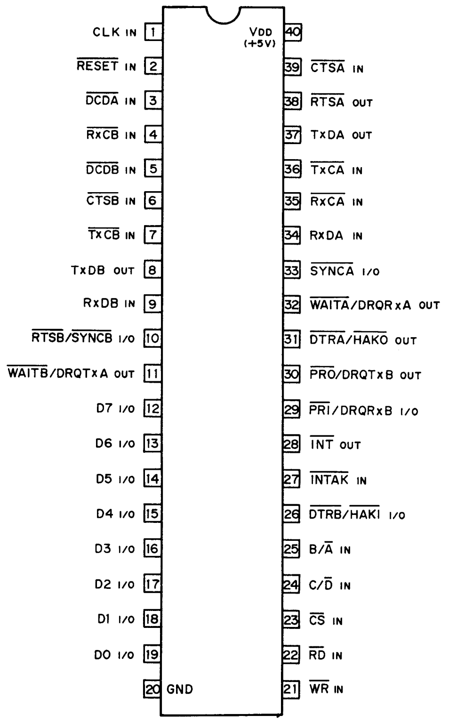
CLK IN 1
RESET IN 2
DCDA IN 3
RxCB IN 4
DCDB IN 5
CTSB IN 6
TxCB IN 7
TxDB OUT 8
RxDB IN 9
RTSB/SYNCB I/O 10
WAITB/DRQTxA OUT 11
D7 I/O 12
D6 I/O 13
D5 I/O 14
D4 I/O 15
D3 I/O 16
D2 I/O 17
D1 I/O 18
D0 I/O 19
20 GND
VDD (+5V) 40
39 CTSA IN
38 RTSA OUT
37 TxDA OUT
36 TxCA IN
35 RxCA IN
34 RxDA IN
33 SYNCA I/O
32 WAITA/DRQRxA OUT
31 DTRA/HAKO OUT
30 PRO/DRQTxB OUT
29 PRI/DRQRxB I/O
28 INT OUT
27 INTAK IN
26 DTRB/HAKI I/O
25 B/A IN
24 C/D IN
23 CS IN
22 RD IN
21 WR IN

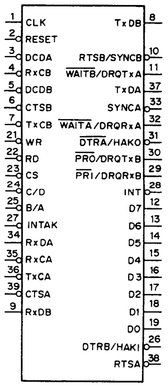
1 CLK
2 RESET
3 DCDA
4 RxCB
5 DCDB
6 CTSB
7 TxCB
21 WR
22 RD
23 CS
24 C/D
25 B/A
27 INTAK
34 RxDA
35 RxCA
36 TxCA
39 CTSA
9 RxDB
TxDB 8
RTSB/SYNCB 10
WAITB/DRQTxA 11
TxDA 37
SYNCA 33
WAITA/DRQRxA 32
DTRA/HAKO 31
PRO/DRQTxB 30
PRI/DRQRxB 29
INT 28
D7 12
D6 13
D5 14
D4 15
D3 16
D2 17
D1 18
D0 19
DTRB/HAKI 26
RTSA 38

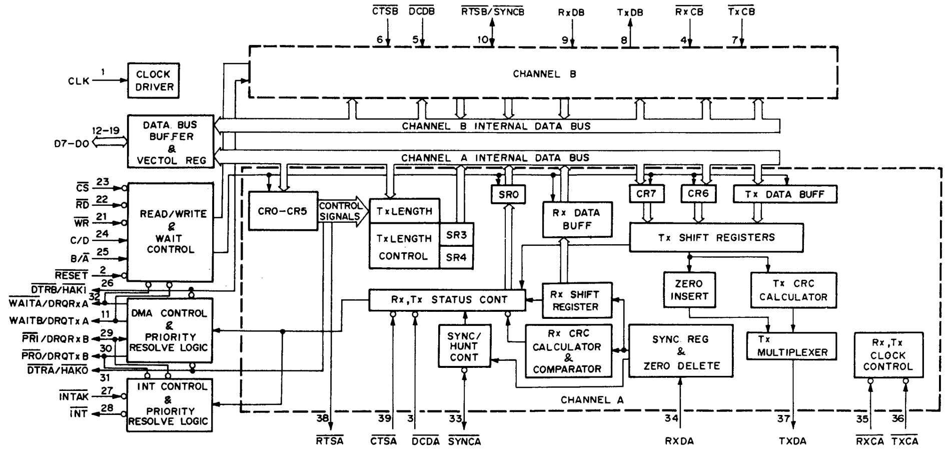
CTSB
DCDB
RTSB/SYNCB
RxDB
TxDB
RxCB
TxCB
6
5
10
9
8
4
7
CHANNEL B
CLK 1
CLOCK DRIVER
D7-D0 12-19
DATA BUS BUFFER & VECTOL REG
CHANNEL B INTERNAL DATA BUS
CHANNEL A INTERNAL DATA BUS
CS 23
RD 22
WR 21
C/D 24
B/A 25
RESET 2
DTRB/HAKI 26
WAITA/DRQRxA 32
WAITB/DRQTxA 11
PRI/DRQRxB 29
PRO/DRQTxB 30
DTRA/HAKO 31
INTAK 27
INT 28
READ/WRITE & WAIT CONTROL
DMA CONTROL & PRIORITY RESOLVE LOGIC
INT CONTROL & PRIORITY RESOLVE LOGIC
CR0-CR5
CONTROL SIGNALS
TxLENGTH
TxLENGTH CONTROL
SR3
SR4
SR0
Rx DATA BUFF
CR7
CR6
Tx DATA BUFF
Tx SHIFT REGISTERS
ZERO INSERT
Tx CRC CALCULATOR
Rx,Tx STATUS CONT
Rx SHIFT REGISTER
SYNC/HUNT CONT
Rx CRC CALCULATOR & COMPARATOR
SYNC REG & ZERO DELETE
Tx MULTIPLEXER
Rx,Tx CLOCK CONTROL
CHANNEL A
38 RTSA
39 CTSA
3 DCDA
33 SYNCA
34 RXDA
37 TXDA
35 RXCA
36 TXCA

CLK; SYSTEM CLOCK
D7-D0; DATA BUS
CS; CHIP SELECT
WR; WRITE
RD; READ
C/D; CONTROL/DATA
B/A; CHANNEL B/CHANNEL A
INT; INTERRUPT REQUEST
INTAK; INTERRUPT ACKNOWLEDGE
PRI/DRQRxB; PRIORITY INPUT/DMA REQUEST RxB
PRO/DRQTxB; PRIORITY OUTPUT/DMA REQUEST TxB
WAITA/DRQRxA; WAIT A/DMA REQUEST RxA
WAITB/DRQTxA; WAIT B/DMA REQUEST TxA
DTRB/HAKI; DATA TERMINAL READY/HOLD ACKNOWLEDGE INPUT
DTRA/HAKO; DATA TERMINAL READY/HOLD ACKNOWLEDGE OUTPUT
RxDA, RxDB; RECEIVE DATA A/B
TxDA, TxDB; TRANSMIT DATA A/B
RxCA, RxCB; RECEIVE CLOCK A/B
TxCA, TxCB; TRANSMIT CLOCK A/B
SYNCA; SYNCHRONIZATION A
RTSB/SYNCB; REQUEST TO SEND B/SYNCHRONIZATION B

CHANNEL SELECTION

| B/A | C/D | WR | RD | CS | FANCTION | |
|---|---|---|---|---|---|---|
| 0 | 0 | 0 | 1 | 0 | CHANNEL A | WRITE(TxD) |
| 1 | | | | | CHANNEL B | |
| 0 | 0 | 1 | 0 | 0 | CHANNEL A | READ(RxD) |
| 1 | | | | | CHANNEL B | |
| 0 | 1 | 0 | 1 | 0 | CHANNEL A | WRITE(COMMAND/PARAMETER·REGISTER) |
| 1 | | | | | CHANNEL B | |
| 0 | 1 | 1 | 0 | 0 | CHANNEL A | READ(STATUS/VECTER·REGISTER) |
| 1 | | | | | CHANNEL B | |

CTSA, CTSB; CLEAR TO SEND A/B
DCDA, DCDB; DATA CARRIER DETECT A/B
RTSA; REQUEST TO SEND A

BA707 (ROHM)

+3.3V VOLTAGE REGULATOR

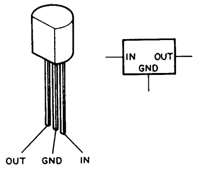
IN
OUT
GND
OUT GND IN

VFC62BM (BURR-BROWN)

V/F (F/V) CONVERTER

– BOTTOM VIEW –

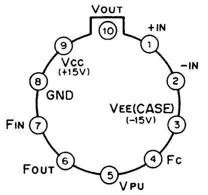
VOUT
10
+IN
1
9
Vcc (+15V)
–IN
2
8
GND
VEE(CASE) (–15V)
FIN
7
3
FOUT
6
5
4
Fc
VPU

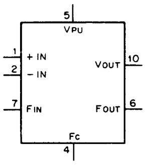
5
VPU
1
+IN
2
–IN
VOUT
10
7
FIN
FOUT
6
Fc
4

FC ; FREQUENCY CONTROL INPUT
FIN ; FREQUENCY INPUT
FOUT ; FREQUENCY OUTPUT
VOUT ; VOLTAGE OUTPUT
VPU ; PULL-UP VOLTAGE INPUT
+IN,–IN ; ANALOG INPUTS

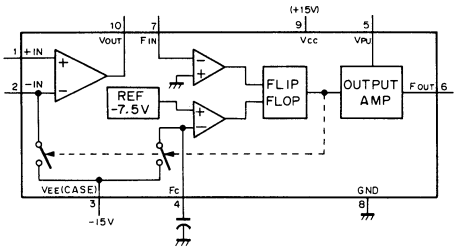
(+15V)
10
VOUT
7
FIN
9
Vcc
5
VPU
1
+IN
2
–IN
REF -7.5V
FLIP FLOP
OUTPUT AMP
FOUT
6
VEE(CASE)
3
-15V
Fc
4
GND
8

TL431CLP (TI)
TL431CLPB (TI)

ADJUSTABLE PRECISION SHUNT REGULATOR

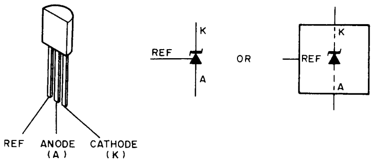
REF
K
A
OR
REF
K
A
REF ANODE (A) CATHODE (K)

TL494CN (TI)

PWM POWER CONTROL

– TOP VIEW –

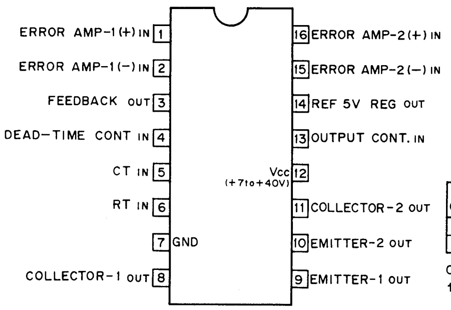
ERROR AMP-1(+)IN 1
ERROR AMP-1(–)IN 2
FEEDBACK OUT 3
DEAD-TIME CONT IN 4
CT IN 5
RT IN 6
7 GND
COLLECTOR-1 OUT 8
16 ERROR AMP-2(+) IN
15 ERROR AMP-2(–) IN
14 REF 5V REG OUT
13 OUTPUT CONT. IN
Vcc 12 (+7to+40V)
11 COLLECTOR-2 OUT
10 EMITTER-2 OUT
9 EMITTER-1 OUT

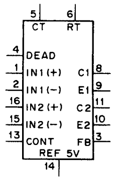
5
6
CT
RT
4
DEAD
1
IN1(+)
C1
8
2
IN1(–)
E1
9
16
IN2(+)
C2
11
15
IN2(–)
E2
10
13
CONT
FB
3
REF 5V
14

| OUTPUT CONTROL | OUTPUT FUNCTION |
|---|---|
| 0 | PARALLEL |
| 1 | PUSH-PULL |

0 ; GROUNDED
1 ; CONNECTED TO PIN14

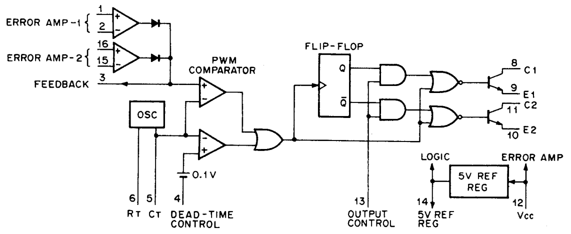
ERROR AMP-1
1
2
ERROR AMP-2
16
15
FEEDBACK
3
PWM COMPARATOR
OSC
0.1V
FLIP-FLOP
Q
Q̄
8
C1
9
E1
11
C2
10
E2
LOGIC
ERROR AMP
5V REF REG
6
5
4
RT CT DEAD-TIME CONTROL
13
OUTPUT CONTROL
14
5V REF REG
12
Vcc

M5F78 ? ? (MITSUBISHI)

POSITIVE VOLTAGE REGULATOR (1A)

– PRINTED SIDE VIEW –

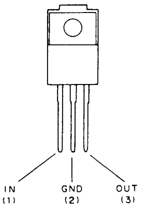
IN (1)
GND (2)
OUT (3)

| | |
|---|---|
| +5V | M5F7805 |
| +6V | M5F7806 |
| +7V | M5F7807 |
| +8V | M5F7808 |
| +9V | M5F7809 |
| +10V | M5F7810 |
| +12V | M5F7812 |
| +15V | M5F7815 |
| +18V | M5F7818 |
| +20V | M5F7820 |
| +24V | M5F7824 |

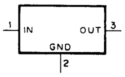
1
IN
OUT
3
GND
2

RC78L ? ? A (RAYTHEON)

POSITIVE VOLTAGE REGULATOR (100mA)

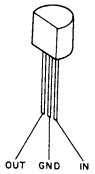

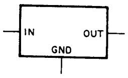

| OUTPUT VOLTAGE | NJM78L??A | RC78L??A | uA78L??ACL | uA78L??AWV | uPC78L??J | AN78L?? |
|---|---|---|---|---|---|---|
| +2.6V | NJM78L02A | RC78L02A | uA78L02ACL | uA78L26AWV | --------- | ------- |
| +4V | --------- | -------- | ---------- | ---------- | --------- | AN78L04 |
| +5V | NJM78L05A | RC78L05A | uA78L05ACL | uA78L05AWV | uPC78L05J | AN78L05 |
| +6V | NJM78L06A | RC78L06A | ---------- | ---------- | --------- | AN78L06 |
| +6.2V | --------- | -------- | uA78L06ACL | uA78L62AWV | --------- | ------- |
| +7V | --------- | -------- | ---------- | ---------- | --------- | AN78L07 |
| +8V | NJM78L08A | RC78L08A | uA78L08ACL | ---------- | uPC78L08J | AN78L08 |
| +8.2V | --------- | -------- | ---------- | uA78L82AWV | --------- | ------- |
| +9V | NJM78L09A | RC78L09A | uA78L09ACL | uA78L09AWV | --------- | AN78L09 |
| +10V | --------- | -------- | uA78L10ACL | ---------- | uPC78L10J | AN78L10 |
| +12V | NJM78L12A | RC78L12A | uA78L12ACL | uA78L12AWV | uPC78L12J | AN78L12 |
| +15V | NJM78L15A | RC78L15A | uA78L15ACL | uA78L15AWV | uPC78L15J | AN78L15 |
| +18V | NJM78L18A | RC78L18A | ---------- | uA78L18AWV | --------- | AN78L18 |
| +20V | NJM78L20A | RC78L20A | ---------- | ---------- | --------- | AN78L20 |
| +24V | NJM78L24A | RC78L24A | ---------- | uA78L24AWV | --------- | AN78L24 |

uPC78L ? ? (NEC)

POSITIVE VOLTAGE REGULATOR (100mA)

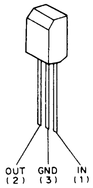
OUT (2)
GND (3)
IN (1)

| OUTPUT VOLTAGE | uPC78L?? | UPC78L??A |
|---|---|---|
| 5V | uPC78L05 | uPC78L05A |
| 6V | | |
| 8V | uPC78L08 | |
| 9V | | |
| 12V | uPC78L12 | |
| 15V | uPC78L15 | |

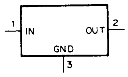
1
IN
OUT
2
GND
3

### NJM78 ? ?A (JRC)

### POSITIVE VOLTAGE REGULATOR (1A)

– SIDE VIEW –

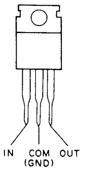

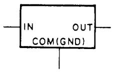

| OUTPUT VOLTAGE | AN78?? | FS78?? | HA178??P | L78?? | NJM78??B | NJM78??A/K |
|---|---|---|---|---|---|---|
| +5V | AN7805 | FS7805 | HA17805P | L7805 | -------- | NJM7805A/K |
| +6V | AN7806 | ------ | HA17806P | ----- | -------- | NJM7806A/K |
| +7V | AN7807 | ------ | HA17807P | L7807 | -------- | ---------- |
| +8V | AN7808 | ------ | HA17808P | ----- | -------- | NJM7808A/K |
| +8.5V | ------ | ------ | -------- | ----- | -------- | ---------- |
| +9V | AN7809 | ------ | -------- | ----- | -------- | NJM7809A/K |
| +10V | AN7810 | ------ | -------- | ----- | -------- | ---------- |
| +12V | AN7812 | FS7812 | HA17812P | ----- | NJM7812B | NJM7812A/K |
| +15V | AN7815 | FS7815 | HA17815P | ----- | -------- | NJM7815A/K |
| +18V | AN7818 | ------ | HA17818P | ----- | -------- | NJM7818A/K |
| +20V | AN7820 | ------ | -------- | ----- | -------- | NJM7820A/K |
| +24V | AN7824 | FS7824 | HA17824P | ----- | -------- | NJM7824A/K |

| OUTPUT VOLTAGE | uA78??UC | uPC143??H | uPC78??H | TA78???P/AP |
|---|---|---|---|---|
| +5V | uA7805UC | uPC14305H | uPC7805H | TA78005P/AP |
| +6V | uA7806UC | --------- | -------- | TA78006P/AP |
| +7V | -------- | --------- | -------- | --------- |
| +8V | uA7808UC | uPC14308H | uPC7808H | TA78008P/AP |
| +8.5V | uA7885UC | --------- | -------- | --------- |
| +9V | -------- | --------- | -------- | TA78009P/AP |
| +10V | -------- | --------- | -------- | TA78010P/AP |
| +12V | uA7812UC | uPC14312H | uPC7812H | TA78012P/AP |
| +15V | uA7815UC | uPC14315H | uPC7815H | TA78015P/AP |
| +18V | uA7818UC | uPC14318H | uPC7818H | TA78018P/AP |
| +20V | -------- | --------- | -------- | TA78020P/AP |
| +24V | uA7824UC | uPC14324H | uPC7824H | TA78024P/AP |

### uPC78N ? ?H (NEC)

### POSITIVE VOLTAGE REGULATOR

– FRONT VIEW –

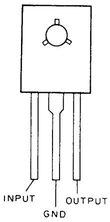

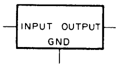

| OUTPUT VOLTAGE | μPC78N??H |
|---|---|
| +5V | μPC78N05H |
| +8V | μPC78N08H |
| +10V | μPC78N10H |
| +12V | μPC78N12H |
| +15V | μPC78N15H |
| +18V | μPC78N18H |
| +24V | μPC78N24H |

### M5F79 ? ? (MITSUBISHI)

### NEGATIVE VOLTAGE REGULATOR (1A)

– PRINTED SIDE VIEW –

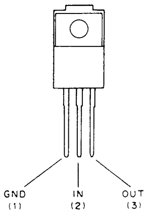

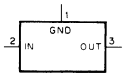

| | |
|---|---|
| – 5 V | M5F7905 |
| – 6 V | M5F7906 |
| – 7 V | M5F7907 |
| – 8 V | M5F7908 |
| – 9 V | M5F7909 |
| – 10V | M5F7910 |
| – 12V | M5F7912 |
| – 15V | M5F7915 |
| – 18V | M5F7918 |
| – 20V | M5F7920 |
| – 24 V | M5F7924 |

### RC79L ? ?A (RAYTHEON)

### NEGATIVE VOLTAGE REGULATOR (100mA)

– FRONT VIEW –

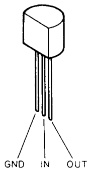

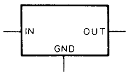

| OUTPUT VOLTAGE | NJM79L??A | RC79L??A | AN79L?? |
|---|---|---|---|
| -3V | NJM79L03A | RC79L03A | ------- |
| -4V | --------- | -------- | AN79L04 |
| -5V | NJM79L05A | RC79L05A | AN79L05 |
| -6V | NJM79L06A | RC79L06A | AN79L06 |
| -7V | --------- | -------- | AN79L07 |
| -8V | NJM79L08A | RC79L08A | AN79L08 |
| -9V | NJM79L09A | RC79L09A | AN79L09 |
| -10V | --------- | -------- | AN79L10 |
| -12V | NJM79L12A | RC79L12A | AN79L12 |
| -15V | NJM79L15A | RC79L15A | AN79L15 |
| -18V | NJM79L18A | RC79L18A | AN79L18 |
| -20V | --------- | -------- | AN79L20 |
| -24V | NJM79L24A | RC79L24A | AN79L24 |

### uPC79N ? ?H (NEC)

### NEGATIVE VOLTAGE REGULATOR

– FRONT VIEW –

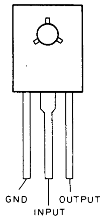

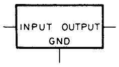

| OUTPUT VOLTAGE | μPC79N??H |
|---|---|
| -5V | μPC79N05H |
| -8V | μPC79N08H |
| -12V | μPC79N12H |
| -15V | μPC79N15H |
| -18V | μPC79N18H |
| -24V | μPC79N24H |

# SECTION D
# REPLACEABLE PARTS AND OPTIONAL FIXTURE

## 補修用部品注意事項

### (1) 安全重要部品

回路図、分解図、電気部品表中、⚠印の部品は安全性を維持するために重要な部品です。従ってこれらの部品を交換するときには必ず指定の部品と交換して下さい。

### (2) 部品の共通化

ソニーから供給される部品セットに実装されているものと異なることがあります。これは部品の共通化、改良等によるものです。
分解図や電気部品表には現時点での共通化された部品が記載されています。

### (3) 部品の変更

部品の変更に関する情報は第E章「CHANGED PARTS」を参照して下さい。

### (4) 部品の在庫

部品表のSP (Supply code) 欄にoで示される部品は交換頻度が低い部品ですので在庫していないことがあり、納期が長くなることがあります。

### (5) コンデンサー、インダクター、抵抗の単位

回路図、分解図、電気部品表中、特に明記したものを除き、下記の単位は省略されています。

コンデンサー : μF
インダクター : μH
抵抗 : Ω

## Notes on Repair Parts

### (1) Safety Related Components Warning

Components marked with ⚠ on the schematic diagrams, exploded views and electrical spare parts list are critical to safe operation. Replace these components with Sony parts whose part numbers appear in this manual or in service bulletins and service manual supplements published by Sony.

### (2) Standardization of Parts

Repair parts supplied from sony Parts Center may not be always identical with the parts which actually in use due to "accommodating the improved parts and/or engineering changes" or "standardization of genuine parts".
This manual's exploded views and electrical spare parts list are indicating the part numbers of "the standardized genuine parts at present".

### (3) Change of Parts

Regarding engineering parts changes, refer to Section E. "CHANGED PARTS".

### (4) Stock of Parts

Parts marked with "o" SP (Supply Code) column of the spare parts list are not normally required for routine service work. Orders for parts marked with "o" will be processed, but allow for additional delivery time.

### (5) Units for Capacitors, Inductors and Resistors

The following units are assumed in schematic diagrams, electrical parts list and exploded views unless otherwise specified.

Capacitors : μF
Inductors : μH
Resistors : Ω

## FRONT PANEL ASSEMBLY, HDD-1000

| No. | Part No. | SP | Description |
|---|---|---|---|
| 1 | A-6004-186-B | o | PANEL (HD) ASSY, DRUM |
| 2 | A-6004-187-A | o | PANEL (HD) ASSY, REEL |
| 3 | A-6004-188-B | o | COVER (HD) ASSY, HEAD |
| 4 | A-6004-189-A | o | COVER (L) (HD) ASSY, ORNAMENTAL |
| 5 | A-6004-190-A | o | COVER (R) (HD) ASSY, ORNAMENTAL |
| 6 | A-6004-191-A | o | COVER (HD) ASSY, FRONT |
| 7 | X-3714-566-1 | o | BOARD (1) ASSY, TOP |
| 8 | 3-673-784-00 | o | CAP |
| 9 | 3-673-944-00 | o | NUT (M3), ORNAMENTAL |
| 10 | 3-673-968-00 | o | STOPPER, SCREW |
| 11 | 3-703-079-31 | s | LABEL, COURTION (BACK) (For UC/EK) |
| 12 | 3-711-704-01 | o | COVER, RUBBER |
| 13 | 3-714-711-01 | o | PLATE (LEFT), TOP |
| 14 | 3-714-711-11 | o | PLATE (RIGHT), TOP |
| 15 | 3-714-796-01 | o | GLASS, WINDOW |
| 16 | 3-714-797-11 | o | HANDLE |
| 17 | 3-714-798-03 | o | COVER (A), FRONT SUB |
| 18 | 3-714-871-01 | s | SPRING |
| 19 | 3-714-872-01 | s | SPRING |
| 20 | 3-886-569-00 | s | TUBE, RUBBER |
| 21 | 7-623-954-41 | s | WASHER 3, FIBER |
| 22 | 7-688-004-01 | s | W 4, SMALL |
| 23 | 7-688-004-11 | s | W 4, MIDDLE |
| 24 | 7-688-004-12 | s | W 4, MIDDLE |

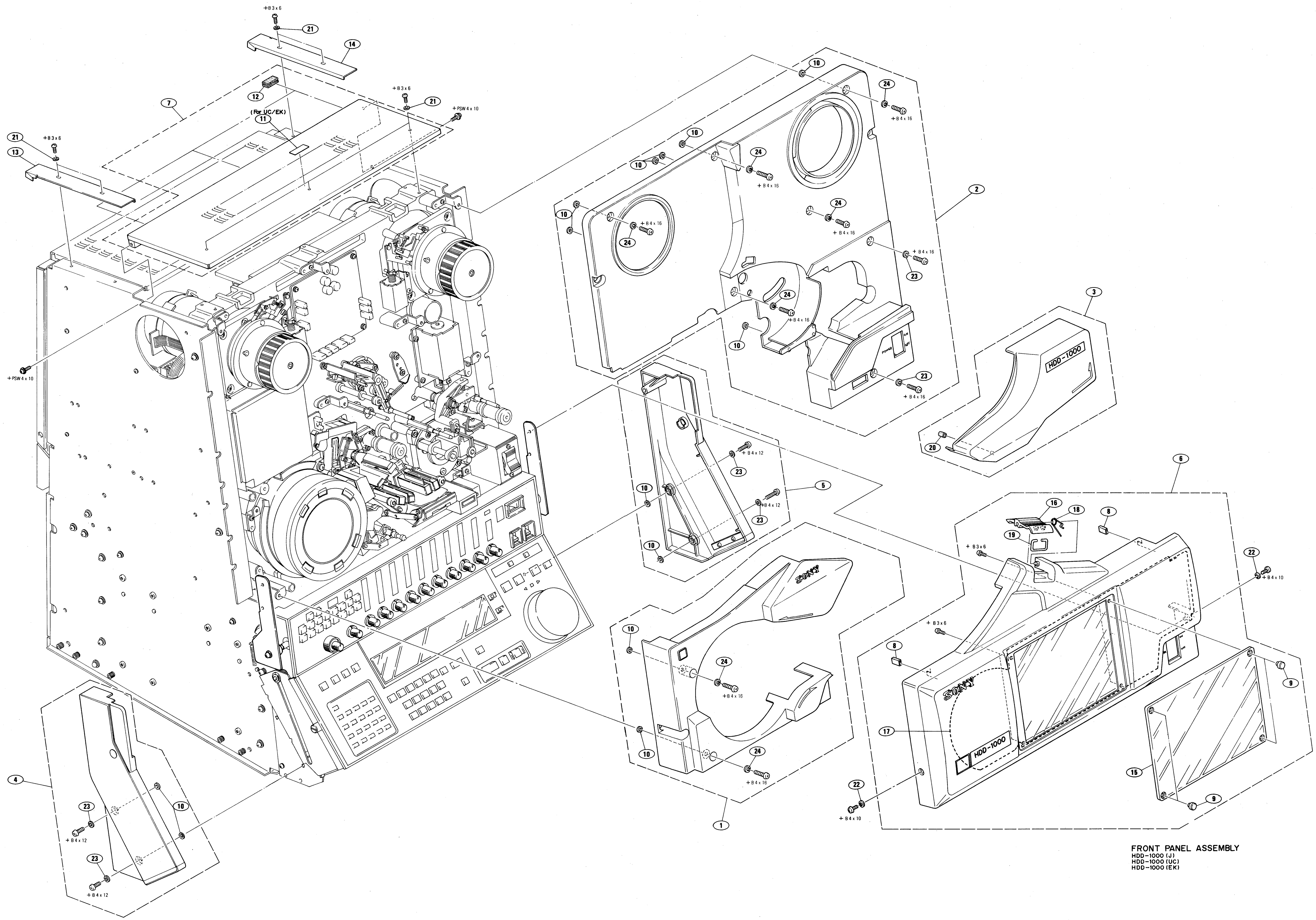
+B3x6
21
14
12
7
(For UC/EK)
11
+B3x6
21
+PSW4x10
21
+B3x6
13
+PSW4x10
10
24
+B4x16
10
24
+B4x16
10
10
24
+B4x16
+B4x16
24
2
+B4x16
23
24
+B4x16
10
23
+B4x16
3
HDD-1000
20
+B4x12
23
5
10
+B4x12
23
10
6
16
18
8
19
+B3x6
22
+B4x10
+B3x6
8
10
24
+B4x16
9
17
SONY
HDD-1000
15
24
10
+B4x16
22
9
+B4x10
1
4
23
10
+B4x12
23
+B4x12

FRONT PANEL ASSEMBLY
HDD-1000 (J)
HDD-1000 (UC)
HDD-1000 (EK)

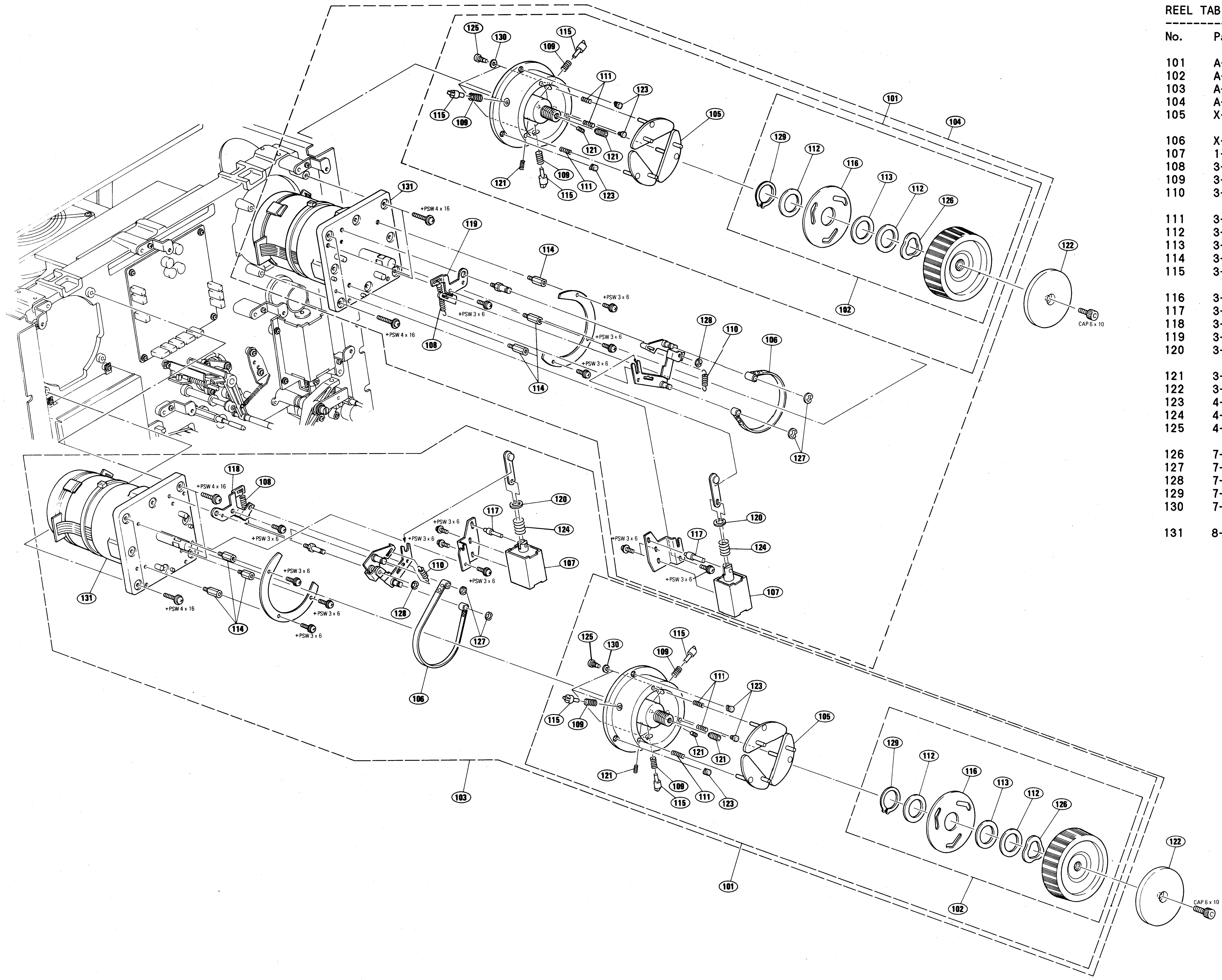
125
130
115
109
111
123
105
101
104
121
131
+PSW 4 x 16
119
114
+PSW 3 x 6
108
129
112
116
113
126
122
CAP 6 x 10
102
128
110
106
127
118
117
120
124
107
103
CAP 6 x 10

REEL TABLE ASSEMBLY
HDD-1000 (J)
HDD-1000 (UC)
HDD-1000 (EK)

REEL TABLE ASSEMBLY, HDD-1000

| No. | Part No. | SP | Description |
|---|---|---|---|
| 101 | A-6039-027-A | o | TABLE ASSY, REEL |
| 102 | A-6039-031-A | o | KNOB ASSY, REEL |
| 103 | A-6039-032-A | o | MOTOR ASSY, S REEL |
| 104 | A-6039-033-A | o | MOTOR ASSY, T REEL |
| 105 | X-3651-315-0 | o | CLAW ASSY, REEL |
| 106 | X-3673-601-0 | s | BAND ASSY, BRAKE |
| 107 | 1-454-304-00 | s | SOLENOID, PLUNGER |
| 108 | 3-472-221-00 | s | SPRING, TENSION |
| 109 | 3-534-216-00 | s | SPRING, COMPRESSION |
| 110 | 3-639-371-00 | s | SPRING, TENSION |
| 111 | 3-651-375-00 | o | SPRING, COMPRESSION |
| 112 | 3-651-377-00 | o | SHEET, FRICTION |
| 113 | 3-651-378-00 | o | SHEET, FRICTION ADJUSTMENT |
| 114 | 3-657-845-00 | o | BRACKET, PC BOARD |
| 115 | 3-673-680-11 | o | PIN, REEL STOPPER |
| 116 | 3-673-711-02 | o | PLATE, CAM, REEL |
| 117 | 3-673-810-00 | o | PIN, SOLENOID |
| 118 | 3-680-319-01 | o | PLATE (SUPPLY), STOPPER |
| 119 | 3-680-320-01 | o | PLATE (TAKE-UP), STOPPER |
| 120 | 3-701-447-21 | s | WASHER, 10 |
| 121 | 3-701-512-01 | s | SCREW (4X8), HEXAGON SOCKET |
| 122 | 3-714-508-01 | o | COVER, REEL |
| 123 | 4-308-895-41 | o | CUSHION, ADJUSTMENT LID |
| 124 | 4-836-109-00 | s | SPRING, COMPRESSION |
| 125 | 4-909-086-01 | s | SHAFT, ADJUSTMENT, HIGH |
| 126 | 7-623-711-07 | s | WASHER 20, WAVE |
| 127 | 7-624-105-04 | s | STOP RING 2.3, TYPE-E |
| 128 | 7-624-106-04 | s | STOP RING 3.0, TYPE-E |
| 129 | 7-624-197-71 | s | STOP RING 20, TYPE-C |
| 130 | 7-688-003-01 | s | W 3, SMALL |
| 131 | 8-835-231-01 | s | MOTOR, DC BHF-2202A |

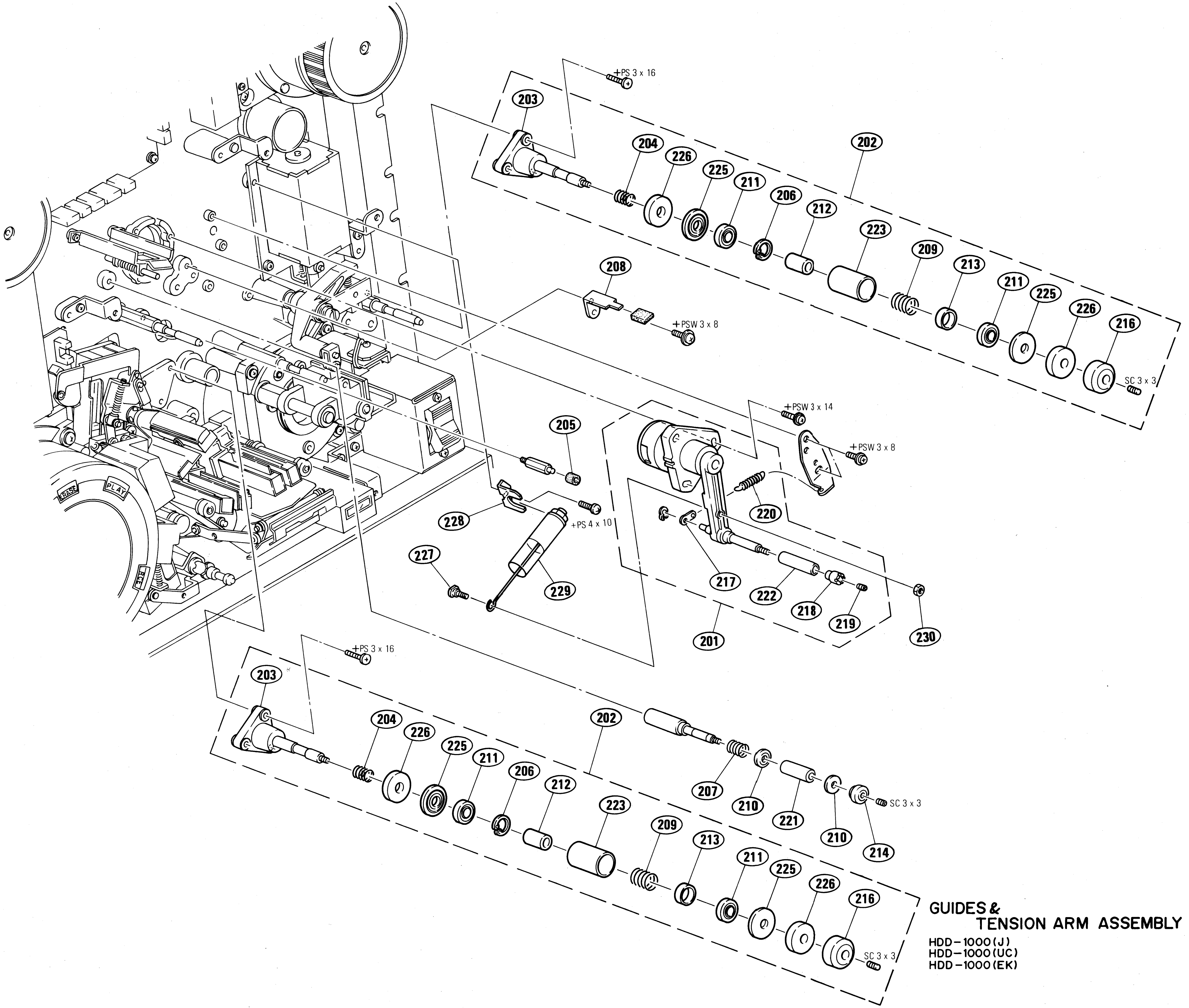
+PS 3 x 16
203
204
226
225
211
206
212
202
223
209
213
211
225
226
216
SC 3 x 3
208
+PSW 3 x 8
205
228
+PS 4 x 10
227
229
+PSW 3 x 14
+PSW 3 x 8
220
217
222
218
219
201
230
PLAY
+PS 3 x 16
203
204
226
225
211
206
212
202
223
207
210
221
210
214
SC 3 x 3
209
213
211
225
226
216
SC 3 x 3

## GUIDES & TENSION ARM ASSEMBLY

HDD-1000(J)
HDD-1000(UC)
HDD-1000(EK)

GUIDE & TENSION ARM ASSEMBLY, HDD-1000

| No. | Part No. | SP | Description |
|---|---|---|---|
| 201 | A-6042-027-A | o | ARM (HD) ASSY, S TENSION |
| 202 | A-6046-066-B | s | G.R (HD) ASSY |
| 203 | X-3673-610-0 | o | SHAFT ASSY, GR |
| 204 | 3-534-235-00 | s | SPRING, COMPRESSION |
| 205 | 3-534-255-00 | o | CUSHION, BRAKE |
| 206 | 3-625-177-00 | s | RING |
| 207 | 3-650-523-00 | s | SPRING, COMPRESSION |
| 208 | 3-651-330-00 | o | STOPPER |
| 209 | 3-651-396-00 | s | SPRING, COMPRESSION |
| 210 | 3-651-427-03 | s | FLANGE, TAPE GUIDE |
| 211 | 3-656-948-00 | s | BEARING, BALL |
| 212 | 3-673-616-00 | s | COLLAR, GR |
| 213 | 3-673-617-00 | o | COLLAR, RETAINER, PRE-LOAD |
| 214 | 3-673-647-00 | o | CAP (A) |
| 216 | 3-673-663-00 | o | FLANGE, GR UPPER |
| 217 | 3-674-636-00 | s | PLATE, HOOK, SPRING |
| 218 | 3-680-332-01 | s | CAP, S TENSION |
| 219 | 3-701-505-00 | s | SET SCREW, DOUBLE POINT 3X3 |
| 220 | 3-731-431-01 | s | SPRING, TENSION |
| 221 | 3-731-219-02 | o | GUIDE (1), TAPE |
| 222 | 3-731-224-01 | o | COLLAR, S TENSION |
| 223 | 3-731-225-01 | s | ROLLER, GUIDE |
| 225 | 3-731-227-01 | o | FLANGE (2), GR |
| 226 | 3-731-228-02 | o | SPACER, GR FLANGE |
| 227 | 3-731-467-02 | s | SCREW, DAMPER |
| 228 | 3-731-468-01 | s | BRACKET, DAMPER |
| 229 | 3-651-458-11 | s | DAMPER, AIR |
| 230 | 7-684-023-04 | s | N3 TYPE2 |

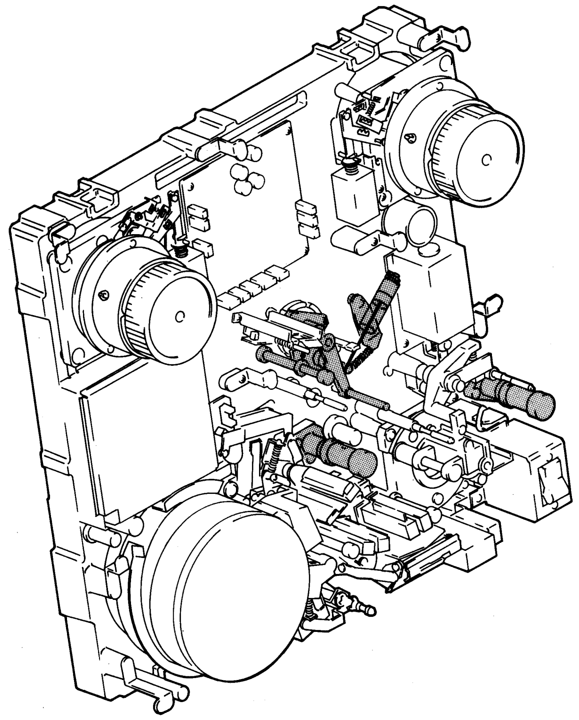

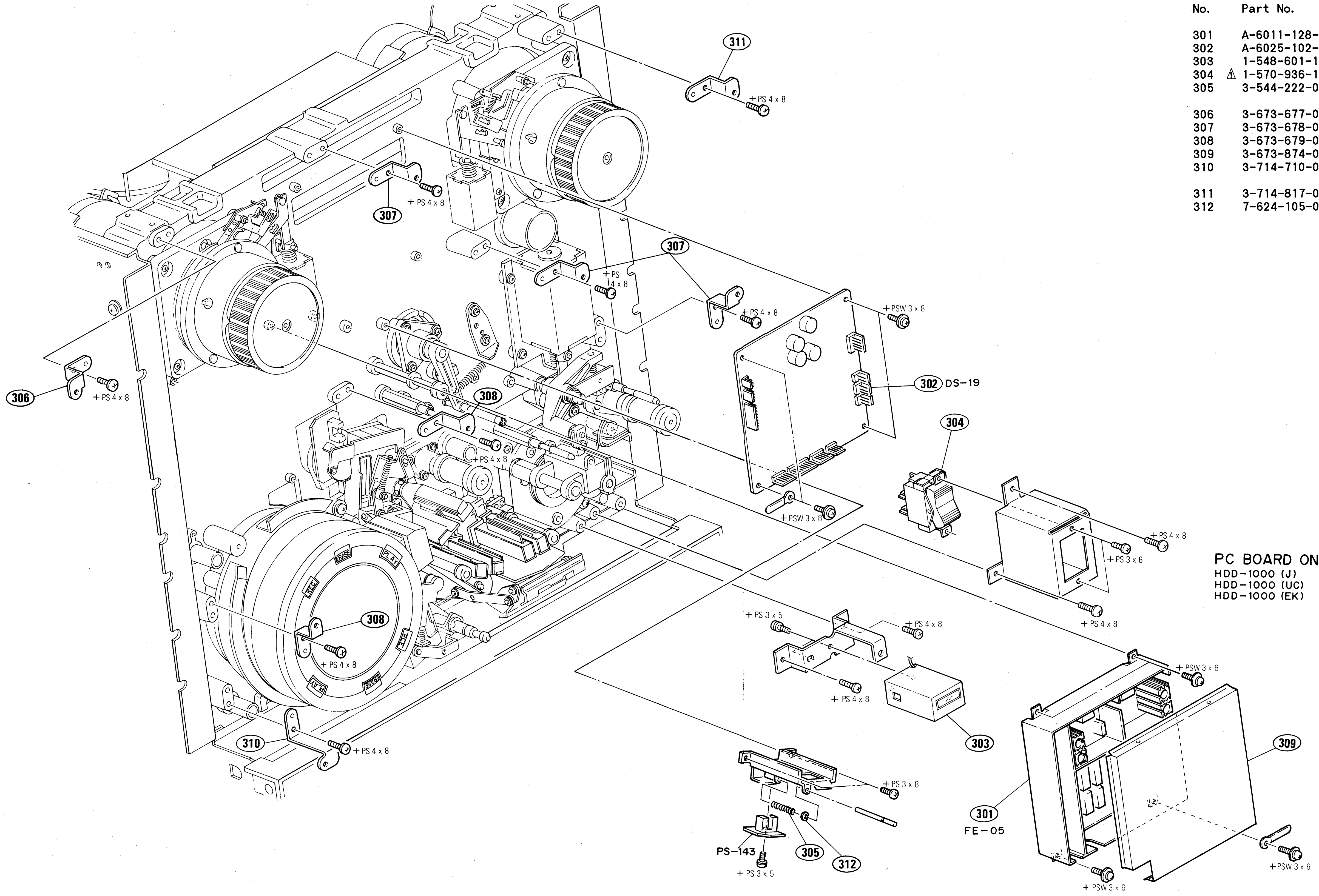
311
+PS 4 x 8
307
+PS 4 x 8
307
+PS 4 x 8
+PS 4 x 8
+PSW 3 x 8
306
+PS 4 x 8
308
302 DS-19
304
+PS 4 x 8
+PSW 3 x 8
+PS 4 x 8
+PS 3 x 6
+PS 3 x 5
+PS 4 x 8
308
+PS 4 x 8
+PS 4 x 8
+PS 4 x 8
303
+PSW 3 x 6
309
310
+PS 4 x 8
+PS 3 x 8
301
FE-05
PS-143
305
312
+PS 3 x 5
+PSW 3 x 6
+PSW 3 x 6

## PC BOARD ON FRONT
HDD-1000 (J)
HDD-1000 (UC)
HDD-1000 (EK)

---

PC BOARD ON FRONT, HDD-1000

---

| No. | Part No. | SP | Description |
|---|---|---|---|
| 301 | A-6011-128-A | o | MOUNTED CIRCUIT BOARD, FE-05 |
| 302 | A-6025-102-A | o | MOUNTED CIRCUIT BOARD, DS-19 |
| 303 | 1-548-601-11 | s | COUNTER, ELECTROMAGNETIC (SMALL) |
| 304 | ⚠ 1-570-936-11 | s | SWITCH, ROCKER (AC POWER) |
| 305 | 3-544-222-01 | s | SPRING, COMPRESSION |
| 306 | 3-673-677-00 | o | BRACKET (1), PANEL |
| 307 | 3-673-678-00 | o | BRACKET (2), PANEL |
| 308 | 3-673-679-01 | o | BRACKET (3), PANEL |
| 309 | 3-673-874-02 | o | COVER, SHIELD, RP-09 |
| 310 | 3-714-710-01 | o | BRACKET (4), PANEL |
| 311 | 3-714-817-01 | o | BRACKET (5), PANEL |
| 312 | 7-624-105-04 | s | STOP RING 2.3, TYPE -E |

HEAD DRUM ASSEMBLY, HDD-1000

| No. | Part No. | SP | Description |
|---|---|---|---|
| 401 | A-6049-040-A | o | MOUNTED CIRCUIT BOARD, LDR-2 |
| 402 | A-6049-041-A | o | MOUNTED CIRCUIT BOARD, LDR-3 |
| 403 | A-6050-622-A | s | DRUM ASSY (DHH-01A-R) |
| 404 | A-6052-113-A | s | DRUM ASSY (DHR-01-R), UPPER |
| 405 | A-6053-056-A | s | RING ASSY, BRUSH SLIP |
| 406 | X-3731-216-2 | s | LID (HD) ASSY, DRUM |
| 407 | 3-673-432-00 | o | SCREW (M3X20), COVER |
| 408 | 3-673-434-00 | o | COVER, SLIP RING |
| 409 | 7-623-210-22 | s | SW 4, TYPE 2 |
| 410 | 7-688-004-01 | s | W 4, SMALL |
| 411 | X-3731-010-1 | o | BRUSH ASSY |

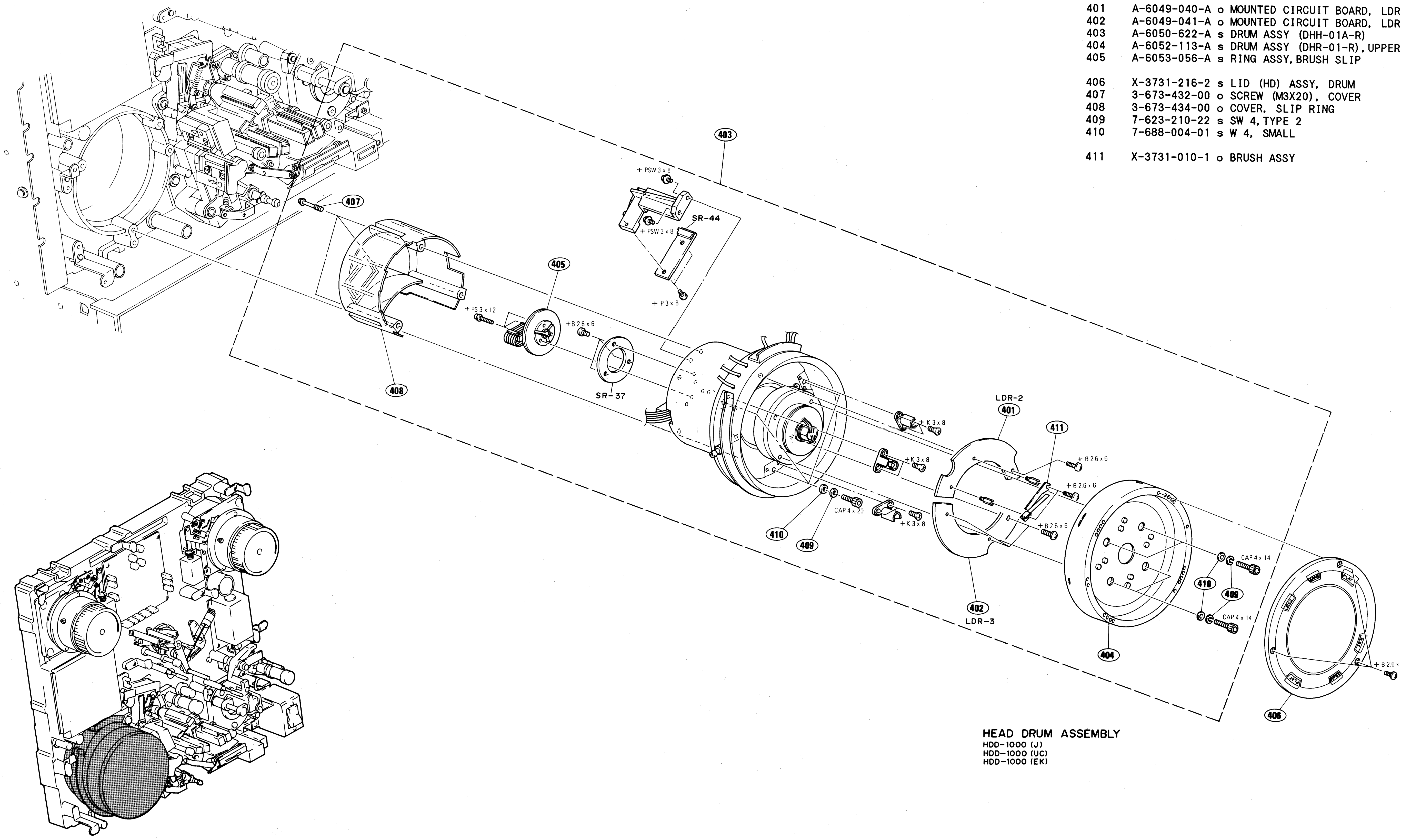
403
+PSW3×8
SR-44
+PSW3×8
+P3×6
407
405
+PS3×12
+B2.6×6
SR-37
408
+K3×8
LDR-2
401
411
+K3×8
+B2.6×6
+B2.6×6
CAP4×20
+K3×8
+B2.6×6
410
409
CAP4×14
410
409
CAP4×14
402
LDR-3
404
+B2.6×6
406

HEAD DRUM ASSEMBLY
HDD-1000 (J)
HDD-1000 (UC)
HDD-1000 (EK)

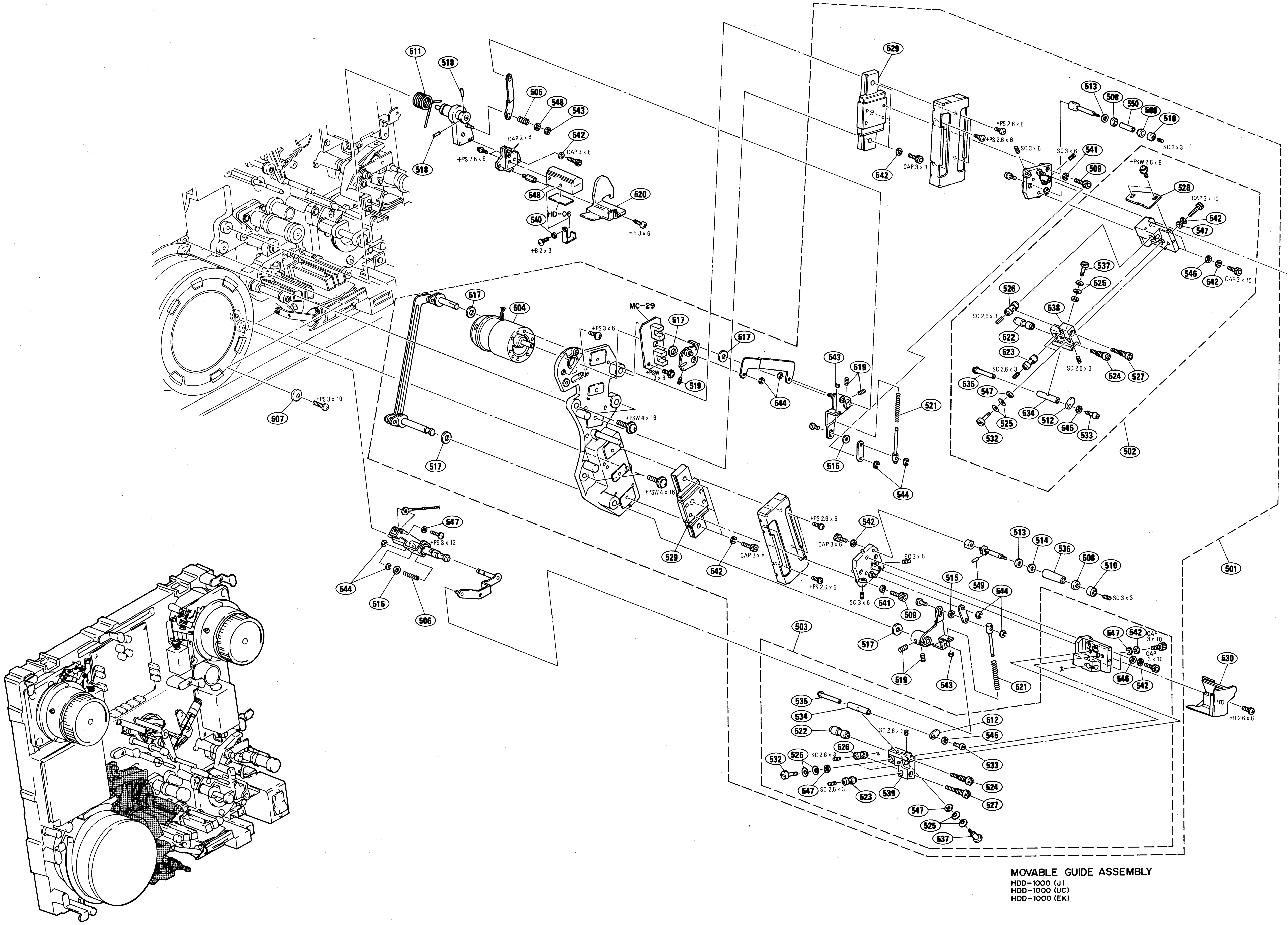
511
518
505
546
543
542
CAP 2 x 6
CAP 3 x 8
+PS 2.6 x 6
518
548
HD-06
520
540
+B 3 x 6
+B 2 x 3
529
+PS 2.6 x 6
+PS 2.6 x 6
542
CAP 3 x 8
513
508
550
508
510
SC 3 x 6
SC 3 x 6
541
509
SC 3 x 3
+PSW 2.6 x 6
528
CAP 3 x 10
542
547
546
542
CAP 3 x 10
531
+B 2.6 x 6
537
525
526
538
SC 2.6 x 3
522
523
SC 2.6 x 3
SC 2.6 x 3
524
527
535
547
525
534
512
545
533
532
502
517
504
MC-29
+PS 3 x 6
517
+PSW 3 x 8
519
517
543
519
544
521
515
544
507
+PS 3 x 10
+PSW 4 x 16
517
+PSW 4 x 16
529
542
CAP 3 x 8
+PS 2.6 x 6
+PS 2.6 x 6
542
CAP 3 x 6
SC 3 x 6
SC 3 x 6
541
509
513
514
536
508
510
SC 3 x 3
549
515
544
547
+PS 3 x 12
544
516
506
503
517
519
543
521
547
542
CAP 3 x 10
CAP 3 x 10
546
542
530
+B 2.6 x 6
501
535
534
522
SC 2.6 x 3
512
545
526
533
532
525
SC 2.6 x 3
547
SC 2.6 x 3
523
539
524
527
547
525
537

MOVABLE GUIDE ASSEMBLY
HDD-1000 (J)
HDD-1000 (UC)
HDD-1000 (EK)

## MOVABLE GUIDE ASSEMBLY, HDD-1000

| No. | Part No. | SP | Description |
|---|---|---|---|
| 501 | A-6046-073-B | s | GUIDE (HD) ASSY, MOVABLE |
| 502 | A-6046-074-A | o | GUIDE (HD) ASSY, S SLANT |
| 503 | A-6046-075-A | o | GUIDE (HD) ASSY, T SLANT |
| 504 | 1-541-198-00 | s | MOTOR, GEARED |
| 505 | 2-245-132-00 | s | SPRING, COMPRESSION |
| 506 | 3-558-727-00 | o | SPRING, COMPRESSION |
| 507 | 3-651-330-00 | o | STOPPER |
| 508 | 3-651-427-03 | s | FLANGE, TAPE GUIDE |
| 509 | 3-669-157-00 | s | SCREW (C2.6X8) |
| 510 | 3-673-647-00 | o | CAP (A) |
| 511 | 3-673-791-02 | o | SPRING, TORSION |
| 512 | 3-680-321-00 | s | FLANGE, GUIDE PIN |
| 513 | 3-680-324-00 | o | SPRING (2) |
| 514 | 3-680-326-00 | o | FLANGE (SUPPLY) |
| 515 | 3-701-441-11 | s | WASHER |
| 516 | 3-701-441-21 | s | WASHER |
| 517 | 3-701-444-21 | s | WASHER, 6 |
| 518 | 3-701-505-00 | s | SET SCREW, DOUBLE POINT 3X3 |
| 519 | 3-701-510-00 | s | SET SCREW, DOUBLE POINT 4X4 |
| 520 | 3-731-480-03 | o | GUIDE (HD), AIR |
| 521 | 3-165-471-01 | o | SPRING, COMPRESSION |
| 522 | 3-714-583-01 | o | SHAFT, SLIDE |
| 523 | 3-714-584-01 | o | NUT (1), SHAFT |
| 524 | 3-714-586-01 | o | SCREW, HEIGHT ADJUSTMENT |
| 525 | 3-714-587-01 | o | SPRING, LEAF |
| 526 | 3-714-603-01 | o | NUT (2), SHAFT |
| 527 | 3-714-604-01 | o | SCREW, ADJUSTMENT |
| 528 | 3-714-608-01 | o | FENCE |
| 529 | 3-714-668-01 | s | GUIDE, LINEAR |
| 530 | 3-714-699-01 | o | COVER (T), GUIDE |
| 531 | 3-731-479-01 | o | COVER (S), GUIDE |
| 532 | 3-714-848-01 | o | SCREW (2), STEP |
| 533 | 3-731-229-01 | o | SCREW, FLANGE |
| 534 | 3-731-230-01 | o | PIN, GUIDE |
| 535 | 3-731-231-01 | o | ARBOR, GUIDE PIN |
| 536 | 3-731-232-04 | o | GUIDE, TAPER |
| 537 | 3-731-239-01 | o | SCREW (HD), STEP |
| 538 | 3-731-253-01 | o | HOLDER (HD), S GUIDE PIN |
| 539 | 3-731-255-01 | o | HOLDER (HD), T GUIDE PIN |
| 540 | 7-623-205-22 | s | SW 2, TYPE 2 |
| 541 | 7-623-207-22 | s | SW 2.6, TYPE 2 |
| 542 | 7-623-208-22 | s | SW 3, TYPE 2 |
| 543 | 7-624-105-04 | s | STOP RING 2.3, TYPE-E |
| 544 | 7-624-106-04 | s | STOP RING 3.0, TYPE-E |
| 545 | 7-688-002-03 | s | W 2.6, SMALL |
| 546 | 7-688-003-01 | s | W 3, SMALL |
| 547 | 7-688-003-11 | s | W 3, MIDDLE |
| 548 | 8-825-501-50 | s | FULL ERASE HEAD (EF274-51) |
| 549 | 3-166-383-01 | s | PIN, POSITIONING |
| 550 | 3-731-219-01 | o | GUIDE (1), TAPE |

## STATIONARY HEAD ASSEMBLY, HDD-1000

| No. | Part No. | SP | Description |
|---|---|---|---|
| 601 | A-6036-087-A | o | HEAD ASSY, PB (PF313-5112) |
| 602 | A-6036-088-A | o | HEAD ASSY, MONITOR (PF313-5112) |
| 603 | A-6036-089-B | o | HEAD ASSY, REC (RS306-5112) |
| 604 | A-6036-090-A | o | HEAD ASSY, A/E (EF312-5103) |
| 605 | A-6047-041-A | o | PLATE ASSY, SHIELD, FRONT |
| 606 | X-3714-554-1 | o | SPRING ASSY, LOCK |
| 607 | 3-650-523-00 | s | SPRING, COMPRESSION |
| 608 | 3-731-452-01 | o | STOPPER (HD) |
| 609 | 3-651-427-03 | s | FLANGE, TAPE GUIDE |
| 610 | 3-653-350-00 | s | SPRING, COMPRESSION |
| 611 | 3-673-647-00 | o | CAP (A) |
| 612 | 3-673-669-02 | o | SHAFT, FIXED GUIDE |
| 613 | 3-689-039-11 | s | BOLT (M2X6), HOLE, HEXAGON |
| 614 | 3-701-441-21 | s | WASHER |
| 615 | 3-701-513-00 | o | SCREW (M4) |
| 616 | 3-714-518-01 | o | WIRE |
| 617 | 3-714-541-11 | o | COVER (2), SHIELD, FRONT |
| 618 | 3-714-542-11 | o | COVER (1), SHIELD, FRONT |
| 619 | 3-731-216-01 | o | SHAFT, LOCK |
| 620 | 3-731-216-11 | o | SHAFT, LOCK |
| 621 | 3-731-219-01 | o | GUIDE (1), TAPE |
| 622 | 7-623-208-22 | s | SW 3, TYPE 2 |
| 623 | 7-623-210-22 | s | SW 4, TYPE 2 |
| 624 | 7-624-105-04 | s | STOP RING 2.3, TYPE -E |
| 625 | 7-624-106-04 | s | STOP RING 3.0, TYPE -E |
| 626 | 7-624-193-01 | s | STOP RING 4, GRIP |
| 627 | 7-626-320-11 | o | PIN, SPRING 3X8 |
| 628 | 7-688-003-11 | s | W 3, MIDDLE |
| 629 | 7-688-004-11 | s | W 4, MIDDLE |
| 630 | X-3165-083-1 | o | PLATE ASSY, SHIELD DA |

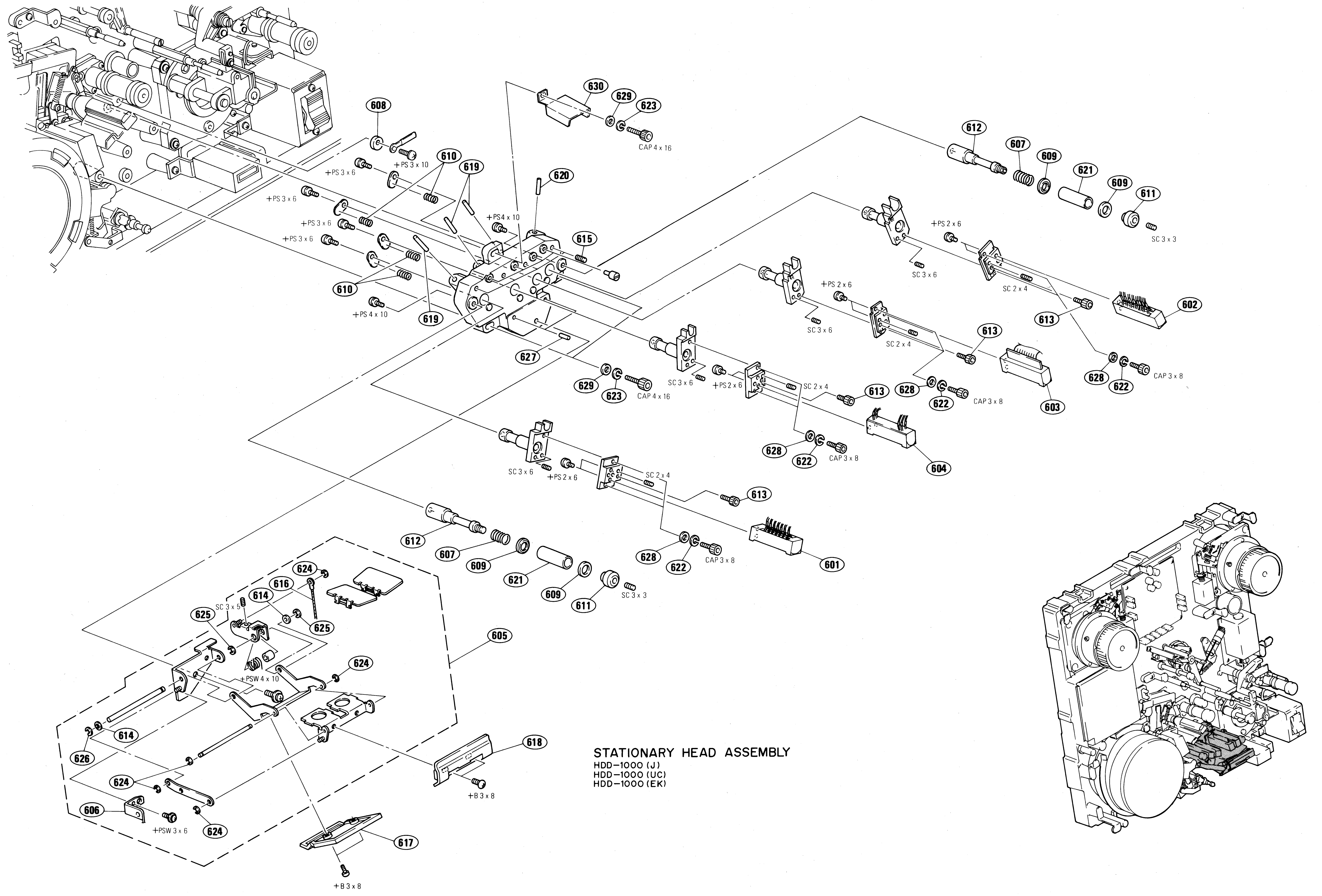
630
629
623
CAP 4 x 16
608
+PS 3 x 10
+PS 3 x 6
610
619
620
612
607
609
621
609
611
SC 3 x 3
+PS 3 x 6
+PS 3 x 6
+PS 3 x 6
+PS4 x 10
615
+PS 2 x 6
SC 3 x 6
SC 2 x 4
602
613
610
+PS 4 x 10
619
+PS 2 x 6
SC 3 x 6
SC 2 x 4
613
627
628
622
CAP 3 x 8
629
623
CAP 4 x 16
SC 3 x 6
+PS 2 x 6
SC 2 x 4
613
628
622
CAP 3 x 8
603
628
622
CAP 3 x 8
604
SC 3 x 6
+PS 2 x 6
SC 2 x 4
613
612
607
609
621
609
611
SC 3 x 3
628
622
CAP 3 x 8
601
624
616
614
SC 3 x 5
625
625
605
624
+PSW 4 x 10
614
626
624
606
+PSW 3 x 6
624
618
+B 3 x 8
617
+B 3 x 8

STATIONARY HEAD ASSEMBLY
HDD−1000 (J)
HDD−1000 (UC)
HDD−1000 (EK)

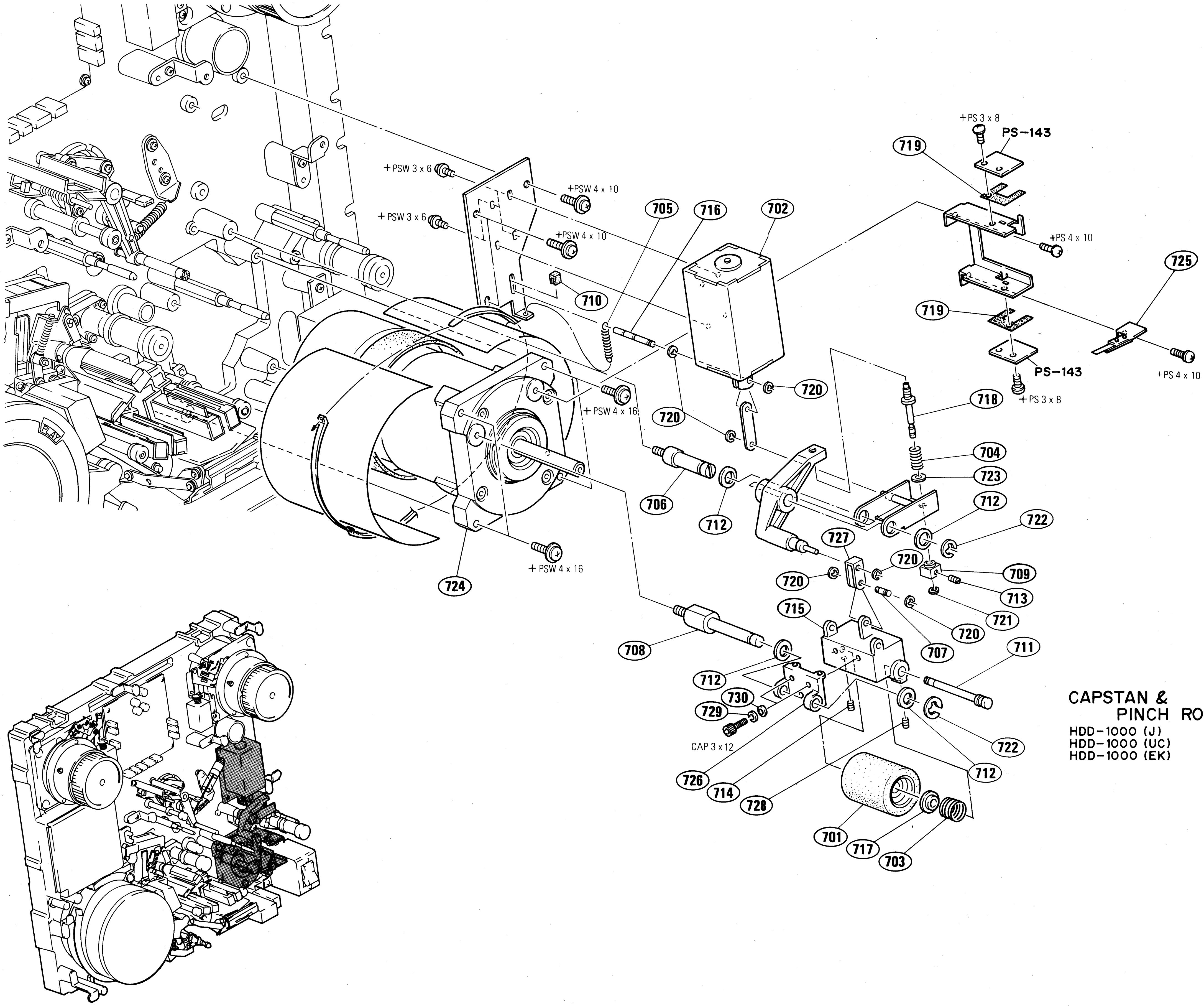
+PSW 3 x 6
+PSW 3 x 6
+PSW 4 x 10
+PSW 4 x 10
+PSW 4 x 16
+PSW 4 x 16
+PS 3 x 8
PS-143
PS-143
+PS 3 x 8
+PS 4 x 10
+PS 4 x 10
CAP 3 x 12
701
702
703
704
705
706
707
708
709
710
711
712
713
714
715
716
717
718
719
720
721
722
723
724
725
726
727
728
729
730
PLAY

CAPSTAN &
PINCH ROLLER ASSEMBLY

HDD-1000 (J)
HDD-1000 (UC)
HDD-1000 (EK)

CAPSTAN & PINCH ROLLER ASSEMBLY, HDD-1000

| No. | Part No. | SP | Description |
|---|---|---|---|
| 701 | X-3731-232-2 | s | PINCH ROLLER (HD) ASSY |
| 702 | 1-454-432-11 | s | SOLENOID, PLUNGER |
| 703 | 3-530-045-00 | s | SPRING, COMPRESSION |
| 704 | 3-534-236-00 | s | SPRING, COMPRESSION |
| 705 | 3-648-065-00 | o | SPRING, TENSION |
| 707 | 3-673-658-00 | o | PIN (2), JOINT |
| 708 | 3-673-659-00 | o | SHAFT, PINCH ROLLER |
| 709 | 3-673-751-00 | o | STOPPER |
| 710 | 3-673-795-00 | o | CUSHION |
| 711 | 3-673-807-00 | o | SHAFT, PINCH ROLLER |
| 712 | 3-701-445-21 | s | WASHER, 7 |
| 713 | 3-701-505-00 | s | SET SCREW, DOUBLE POINT 3X3 |
| 714 | 3-701-508-00 | s | SET SCREW, DOUBLE POINT 3X6 |
| 715 | X-3673-671-1 | o | PINCH LEVER (1) ASSY |
| 716 | 3-714-535-01 | o | SHAFT, JOINT, SOLENOID |
| 717 | 3-673-808-00 | o | RETAINER (DIA, 4), BEARING |
| 718 | 3-714-605-01 | o | SHAFT, PRESS ADJUSTMENT |
| 719 | 3-714-609-01 | o | SHEET, SENSOR FITTING |
| 720 | 7-624-105-04 | s | STOP RING 2.3, TYPE-E |
| 721 | 7-624-106-04 | s | STOP RING 3.0, TYPE-E |
| 722 | 7-624-110-04 | s | STOP RING 6.0, TYPE-E |
| 723 | 7-688-004-11 | s | W 4, MIDDLE |
| 724 | 8-835-232-01 | s | MOTOR, DC BHF-2301A |
| 725 | X-3731-228-1 | s | GROUND ASSY, C SHAFT |
| 726 | X-3673-632-2 | s | PINCH LEVER (2) ASSY |
| 727 | 3-673-657-02 | o | JOINT |
| 728 | 3-701-506-01 | s | SET SCREW, DOUBLE POINT 3X4 |
| 729 | 3-623-208-22 | s | SW 3, TYPE 2 |
| 730 | 7-688-003-01 | s | W 3, SMALL |

LEVEL CONTROL PANEL ASSEMBLY, HDD-1000

| No. | Part No. | SP | Description |
|---|---|---|---|
| 801 | A-6013-096-A | o | MOUNTED CIRCUIT BOARD, AU-109 |
| 802 | A-6013-097-A | o | MOUNTED CIRCUIT BOARD, VR-74 |
| 803 | A-6026-100-A | o | MOUNTED CIRCUIT BOARD, SW-269 |
| 804 | A-6031-094-A | o | MAIN (HD) ASSY, METER PANEL |
| 805 | X-3668-056-0 | s | KNOB (W) ASSY, CONTROL |
| 806 | X-3673-650-0 | s | KNOB (2) ASSY, CONTROL |
| 807 | X-3714-537-1 | o | DAMPER (RIGHT) ASSY |
| 808 | X-3714-538-1 | o | ARM (LEFT) ASSY, HINGE |
| 809 | X-3714-541-1 | o | DAMPER (LEFT) ASSY |
| 810 | X-3714-542-1 | o | ARM (RIGHT) ASSY, HINGE |
| 811 | X-3731-217-3 | o | PANEL (HD) ASSY, METER |
| 812 | 2-252-615-00 | o | CUSHION, SWITCH |
| 813 | 2-252-623-00 | o | PLATE, SWITCH, LEVER |
| 814 | 2-360-734-00 | s | KNOB (3), LEVER SWITCH |
| 815 | 3-425-129-01 | s | SPRING, TENSION |
| 816 | 3-534-255-00 | o | CUSHION, BRAKE |
| 817 | 3-714-696-01 | o | SUPPORT (LEFT), METER |
| 818 | 3-714-697-01 | o | SUPPORT (RIGHT), METER |
| 819 | 3-714-740-01 | o | GEAR (A), DAMPER |

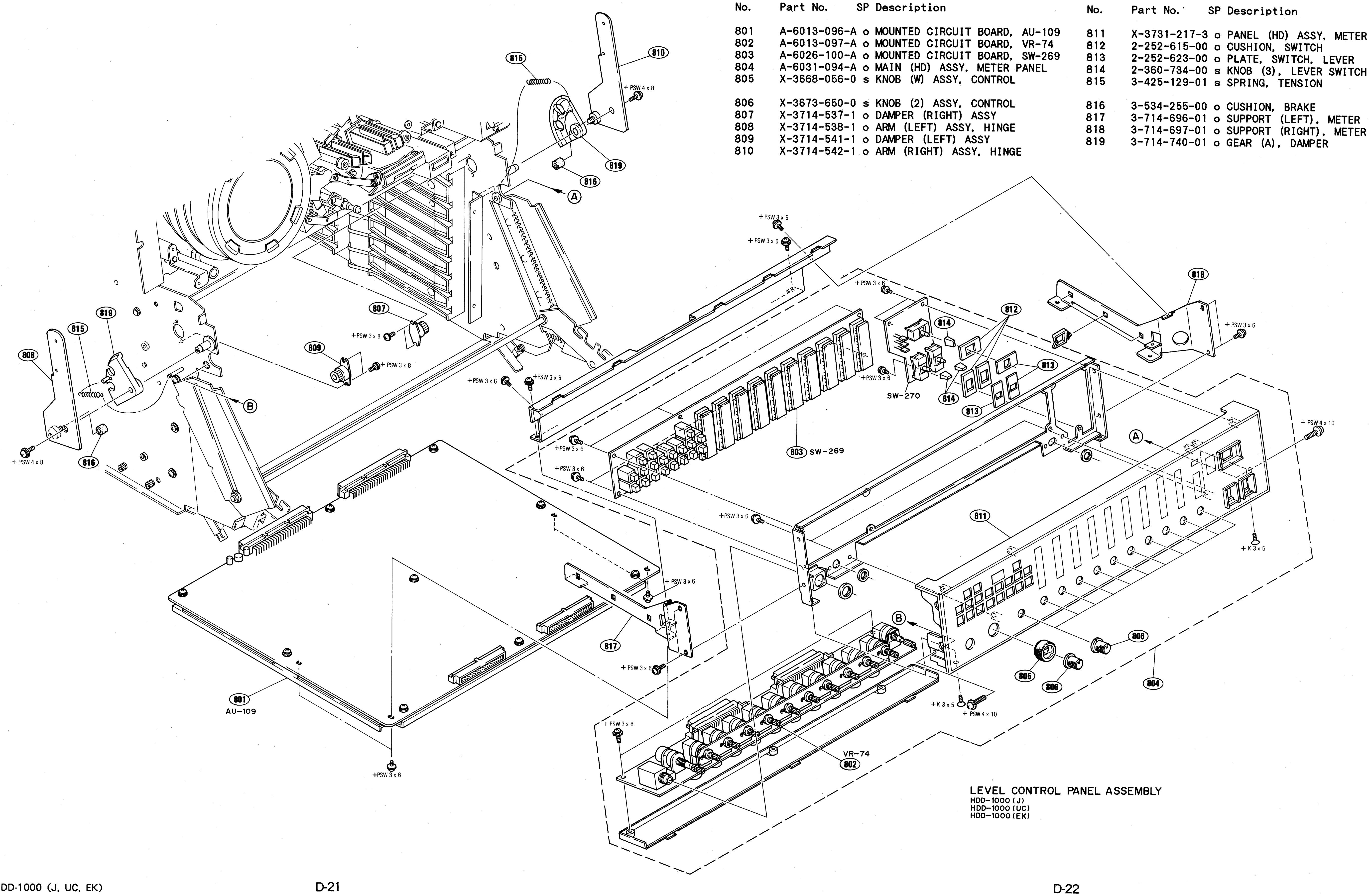
815
810
+PSW 4 x 8
819
816
A
+PSW 3 x 6
818
812
814
813
SW-270
803 SW-269
811
+PSW 4 x 10
+K 3 x 5
B
806
805
804
VR-74
802
801
AU-109
807
809
808
+PSW 3 x 8
817

LEVEL CONTROL PANEL ASSEMBLY
HDD-1000 (J)
HDD-1000 (UC)
HDD-1000 (EK)

## CONTROL PANEL ASSEMBLY, HDD-1000

| No. | Part No. | SP | Description |
|---|---|---|---|
| 901 | A-6017-152-A | o | MOUNTED CIRCUIT BOARD, KY-139 |
| 902 | A-6017-153-A | o | MOUNTED CIRCUIT BOARD, KC-14 |
| 903 | A-6031-092-A | o | CONTROL PANEL (HD) ASSY |
| 904 | A-6031-095-A | o | MAIN (HD) ASSY, CONTROL PANEL |
| 905 | 1-515-618-12 | s | CLUTCH, ELECTOMAGNETIC |
| 906 | 2-252-640-00 | s | KNOB, TACT SWITSH |
| 907 | 3-486-138-00 | s | SCREW |
| 908 | 3-670-095-00 | o | HOLDER, LED |
| 909 | 3-673-694-00 | o | HOLDER, DME |
| 910 | 3-701-507-00 | s | SET SCREW, DOUBLE POINT, (M3X5) |
| 911 | 3-714-595-01 | o | KNOB, DIAL |
| 912 | 3-714-596-01 | o | DIAL |
| 913 | 3-714-628-01 | o | KEY, TEN |
| 914 | 3-714-801-01 | o | HOLDER, MENU |
| 915 | 3-714-802-11 | o | LID, REAR, CONTROL PANEL |
| 916 | 3-714-870-01 | o | SCREW, ORNAMENTAL |
| 917 | 3-731-438-01 | o | SHEET C (HD), MENU |
| 918 | 3-731-439-01 | o | SHEET B (HD), MENU |
| 919 | 3-731-440-01 | o | SHEET A (HD), MENU |
| 920 | 7-688-003-12 | s | W 3, MIDDLE |
| 921 | 8-745-211-00 | s | DME, DM-211 |

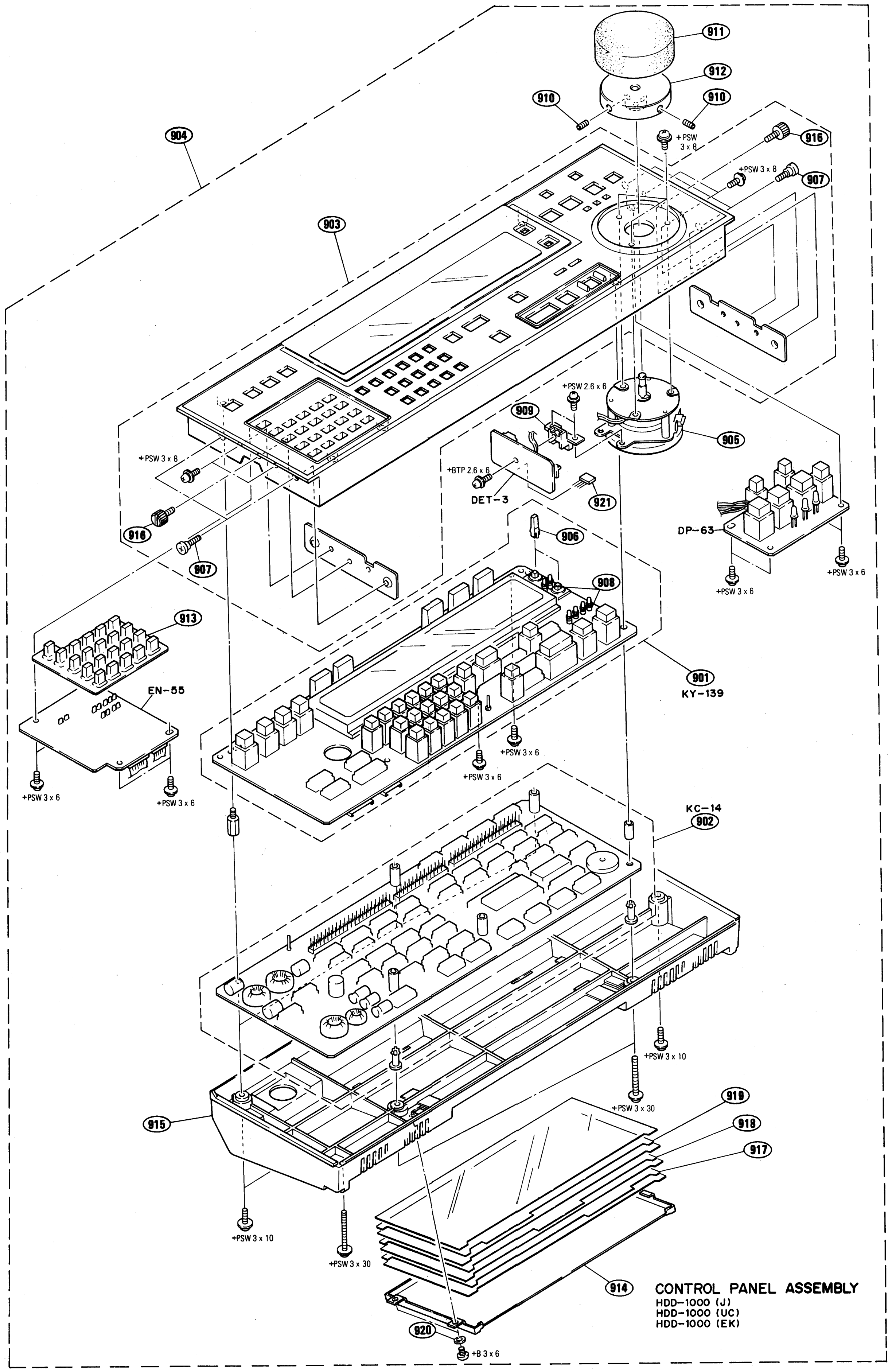

**CONTROL PANEL ASSEMBLY**
HDD-1000 (J)
HDD-1000 (UC)
HDD-1000 (EK)

## CONTROL PANEL BRACKET & PC BOARD ASSEMBLY, HDD-1000

| No. | Part No. | SP | Description |
|---|---|---|---|
| 1001 | A-6004-185-A | o | LID (HD) ASSY, BOTTOM |
| 1002 | A-6030-156-B | o | SHIELD PLATE ASSY, FRONT |
| 1003 | A-6011-130-A | o | MOUNTED CIRCUIT BOARD, PRD-1 |
| 1004 | A-6015-110-A | o | MOUNTED CIRCUIT BOARD, SV-90 |
| 1005 | A-6017-151-A | o | MOUNTED CIRCUIT BOARD, SY-103 |
| 1006 | A-6049-044-A | o | MOUNTED CIRCUIT BOARD, DRC-1 |
| 1007 | X-3673-658-0 | o | SUPPORT (RIGHT) ASSY, STAY |
| 1008 | X-3673-660-0 | o | SUPPORT (LEFT) ASSY, STAY |
| 1009 | X-3714-529-1 | o | PLATE ASSY, SHIELD |
| 1010 | X-3714-550-1 | o | SUPPORT (LEFT) ASSY, PANEL |
| 1011 | X-3714-551-1 | o | SUPPORT (RIGHT) ASSY, PANEL |
| 1012 | X-4836-202-1 | s | FOOT ASSY |
| 1013 | 3-483-026-00 | o | RETAINER, THRUST, MOTOR |
| 1014 | 3-550-705-00 | o | SPRING, TENSION |
| 1015 | 3-668-306-00 | s | GEAR (D) |
| 1016 | 3-701-444-21 | s | WASHER, 6 |
| 1017 | 3-703-358-03 | s | PIN PARALLEL |
| 1018 | 3-714-634-01 | o | LEVER, PC BOARD |
| 1019 | 3-714-691-01 | o | PIN, SPRING |
| 1020 | 3-714-723-03 | o | BOARD, BOTTOM |
| 1021 | 3-714-754-01 | o | KNOB, LOCK |
| 1022 | 3-714-755-01 | o | PLATE (LEFT), LOCK |
| 1023 | 3-714-755-11 | o | PLATE (RIGHT), LOCK |
| 1024 | 3-714-756-01 | o | SHAFT, KNOB |
| 1025 | 3-714-759-11 | o | LID, BOTTOM |
| 1026 | 3-714-766-01 | o | SHAFT, CONTROL PANEL DRIVING |
| 1027 | 3-714-767-01 | o | BEARING, SLIDE |
| 1028 | 3-714-768-01 | o | RACK |
| 1029 | 3-714-815-01 | o | SHEET, MAINTENANCE |
| 1030 | 3-731-207-01 | o | SHEET (HD), BOTTOM LID |
| 1031 | 3-731-259-01 | o | LID (1), DRC SHIELD |
| 1032 | 3-731-272-01 | o | LID (2), DRC SHIELD |
| 1033 | 3-845-334-11 | s | SCREW, ORNAMENTAL |
| 1034 | 4-866-143-00 | s | SPRING, COMPRESSION |
| 1035 | 7-623-212-22 | s | SW 5, TYPE 2 |
| 1036 | 7-624-105-04 | s | STOP RING 2.3, TYPE -E |
| 1037 | 7-624-109-04 | s | STOP RING 5.0, TYPE -E |
| 1038 | 7-624-111-04 | s | STOP RING 7.0, TYPE -E |
| 1039 | 7-684-023-04 | s | N 3, TYPE 2 |
| 1040 | 7-688-004-11 | s | W 4, MIDDLE |
| 1041 | 7-688-005-01 | s | W 5, SMALL |

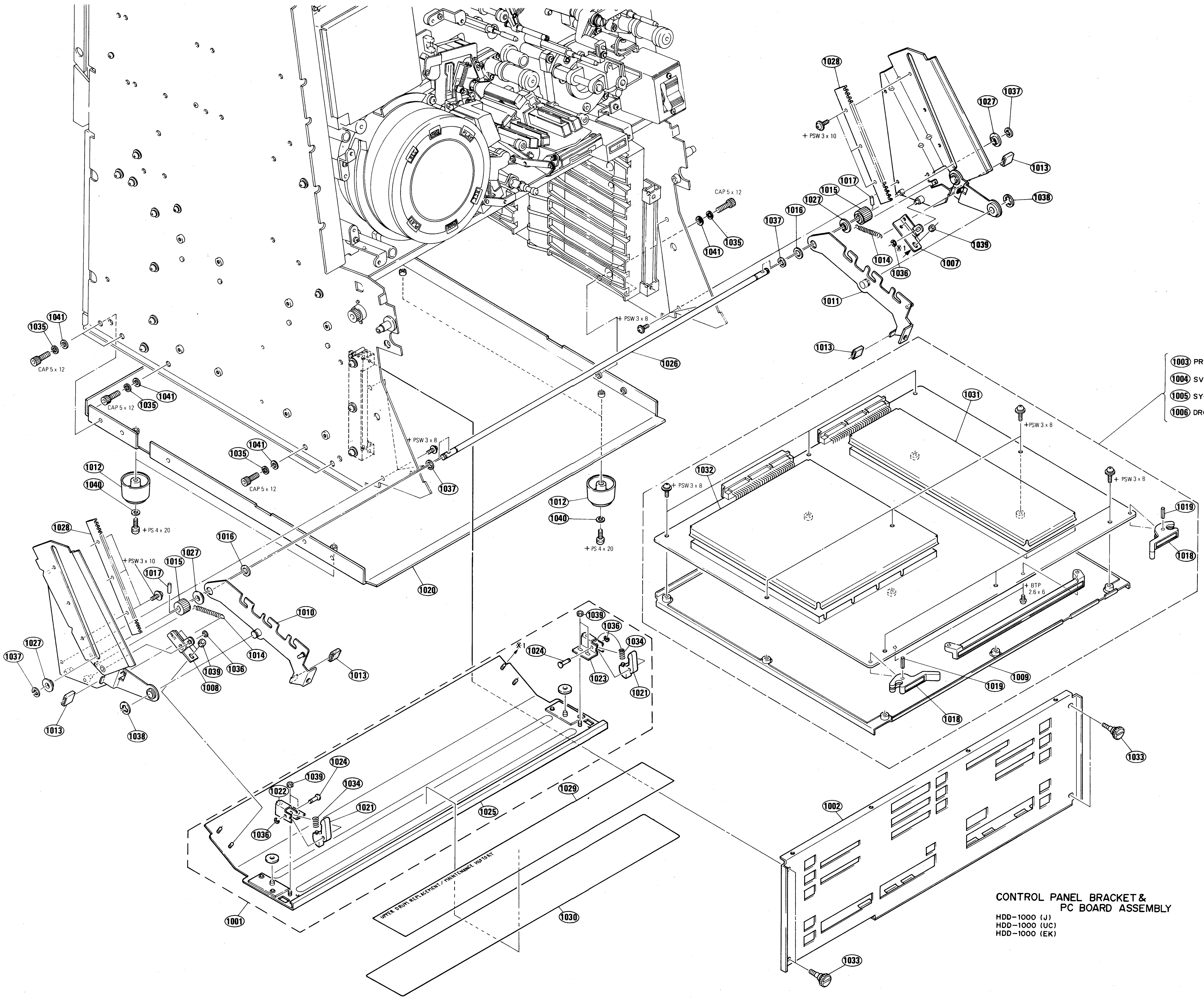
1028
1037
1027
+ PSW 3 x 10
1013
1038
1017
1015
1027
CAP 5 x 12
1016
1037
1039
1035
1041
1014
1036
1007
1011
+ PSW 3 x 8
1013
1026
1003 PRD-1
1004 SV-90
1005 SY-103
1006 DRC-1
1041
1035
CAP 5 x 12
1041
1035
CAP 5 x 12
1031
+PSW 3 x 8
1041
1035
CAP 5 x 12
+ PSW 3 x 8
1037
1012
1040
+ PS 4 x 20
1032
+ PSW 3 x 8
+ PSW 3 x 8
1012
1040
+ PS 4 x 20
1019
1018
1028
+PSW 3 x 10
1017
1015
1027
1016
1020
+ BTP 2.6 x 6
1010
1014
1013
1039
1036
1008
1027
1037
1013
1038
1039
1036
1034
1024
1023
1021
1009
1019
1018
1033
1024
1039
1034
1022
1021
1036
1025
1029
1002
UPPER DRUM REPLACEMENT / MAINTENANCE HISTORY
1001
1030
1033

CONTROL PANEL BRACKET &
PC BOARD ASSEMBLY
HDD-1000 (J)
HDD-1000 (UC)
HDD-1000 (EK)

## POWER SUPPLY ASSEMBLY, HDD-1000

| No. | Part No. | SP | Description |
|---|---|---|---|
| 1101 | X-3714-539-1 | o | DISK ASSY, UR |
| 1102 | X-3731-208-1 | o | LID (HD-D) ASSY, REAR |
| 1103 ⚠ | 1-413-274-11 | o | REGULATOR, SWITCHING (UR-20) |
| 1104 ⚠ | 1-413-281-21 | s | REGULATOR, SWITCHING |
| 1105 ⚠ | 1-413-406-11 | s | REGULATOR, SWITCHING |
| 1106 ⚠ | 1-534-517-00 | s | 3P AC CORD (For UC) |
| 1107 | 1-541-337-21 | s | FAN, COOLING |
| 1108 ⚠ | 1-556-371-00 | s | CORD, POWER (For EK) |
| 1109 ⚠ | 1-559-001-11 | s | CORD, POWER (For J) |
| 1110 ⚠ | 1-576-044-11 | s | BREAKER, CIRCUIT |
| 1111 | 2-369-250-11 | o | LABEL, INDICATION, SCREW |
| 1112 | 2-430-789-01 | o | SCREW (3X55), PAN |
| 1113 | 3-483-026-31 | o | BRACKET, MOTOR THRUST |
| 1114 | 3-564-029-00 | s | SPRING, COMPRESSION |
| 1115 | 3-575-481-00 | s | SPRING, TENSION |
| 1116 ⚠ | 3-649-728-00 | s | STOPPER, CORD |
| 1117 | 3-673-784-00 | o | CAP |
| 1118 | 3-680-316-00 | s | NUT (M4), STOPPER |
| 1119 | 3-701-447-21 | s | WASHER, 10 |
| 1120 | 3-714-724-01 | o | LID (2), REAR |
| 1121 | 3-714-854-01 | o | EDGING (BLACK) |
| 1122 | 3-714-855-01 | o | SPACER, REAR PANEL |
| 1123 | 4-363-409-21 | s | HANDLE |
| 1124 | 4-373-536-01 | s | RUBBER, VIBRATION PROOF |
| 1125 | 4-606-334-01 | o | GUARD, FINGER |
| 1126 | 4-882-677-00 | s | SPRING, COMPRESSION |
| 1127 | 7-623-208-22 | s | SW 3, TYPE 2 |
| 1128 | 7-623-954-41 | s | WASHER 3, FIBER |
| 1129 | 7-623-955-01 | s | WASHER 4.0, FIBER |
| 1130 | 7-624-106-04 | s | STOP RING 3.0, TYPE -E |
| 1131 | 7-624-108-04 | s | STOP RING 4.0, TYPE -E |
| 1132 | 7-624-113-04 | s | STOP RING 9.0, TYPE -E |
| 1133 | 7-684-023-04 | s | N 3, TYPE 2 |
| 1134 | 7-688-003-11 | s | W 3, MIDDLE |

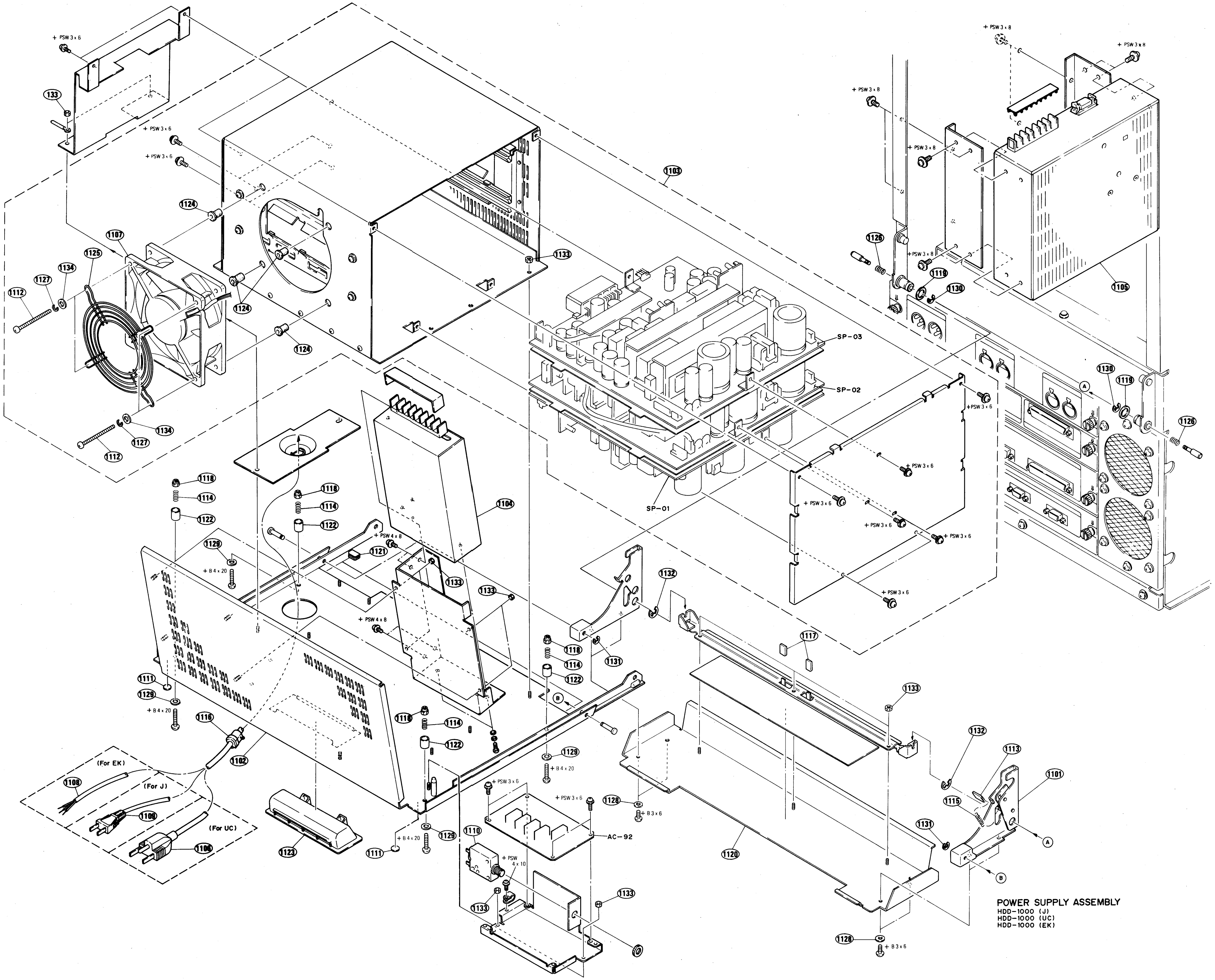
1101
1102
1103
1104
1105
1106
1107
1108
1109
1110
1111
1112
1113
1114
1115
1116
1117
1118
1119
1120
1121
1122
1123
1124
1125
1126
1127
1128
1129
1130
1131
1132
1133
1134
SP-01
SP-02
SP-03
AC-92
(For EK)
(For J)
(For UC)
+ PSW 3×6
+ PSW 3×8
+ PSW 4×8
+ PSW 4×10
+ B 4×20
+ B 3×6
A
B

POWER SUPPLY ASSEMBLY
HDD-1000 (J)
HDD-1000 (UC)
HDD-1000 (EK)

## CONNECTOR PANEL ASSEMBLY, HDD-1000

| No. | Part No. | SP | Description |
|---|---|---|---|
| 1201 | A-6013-094-A | o | MOUNTED CIRCUIT BOARD, LO-06 (For J) |
| 1202 | A-6013-095-A | o | MOUNTED CIRCUIT BOARD, LO-06 (For UC/EK) |
| 1203 | A-6021-008-A | o | MOUNTED CIRCUIT BOARD, IF-207 |
| 1204 | A-6021-009-A | o | MOUNTED CIRCUIT BOARD, DIF-2 |
| 1205 | A-6025-127-A | o | MOUNTED CIRCUIT BOARD, MB-199 |
| 1206 | A-6017-154-A | o | SE-49 (HD) COMPL |
| 1207 | X-3731-223-1 | o | PANEL SHUTTER ASSY, REAR |
| 1208 | X-3731-224-1 | o | SPRING BASE ASSY, LO |
| 1209 | 1-506-796-11 | s | CONNECTOR, D-SUB 15P FEMALE |
| 1210 | 1-541-327-11 | s | FAN, DC |
| 1211 | 1-563-323-11 | s | CONNECTOR, D-SUB 9P FEMALE |
| 1212 | 1-563-781-21 | s | CONNECTOR, D-SUB 50P FEMALE |
| 1213 | 1-566-472-21 | s | CONNECTOR, D-SUB 50P FEMALE |
| 1214 | 1-568-005-11 | s | CONNECTOR, XLR TYPE 3P MALE |
| 1215 | 1-568-006-11 | s | CONNECTOR, XLR TYPE 3P FEMALE |
| 1216 | 2-252-609-00 | o | COVER, FAN |
| 1217 | 3-564-029-00 | s | SPRING, COMPRESSION |
| 1218 | 3-576-921-00 | s | SPRING, COMPRESSION |
| 1219 | 3-630-837-00 | o | BUSHING, STAND BY LAMP |
| 1220 | 3-680-316-00 | s | NUT (M4), STOPPER |
| 1221 | 3-714-855-01 | o | SPACER, REAR PANEL |
| 1222 | 3-714-855-21 | o | SPACER, REAR PANEL |
| 1223 | 3-845-334-11 | s | SCREW, ORNAMENTAL |
| 1224 | 7-623-955-01 | s | WASHER 4.0, FIBER |
| 1225 | 7-623-956-41 | s | WASHER 5.0, FIBER |
| 1226 | 7-624-106-04 | s | STOP RING 3.0, TYPE -E |
| 1227 | 7-688-004-01 | s | W 4, SMALL |
| 1228 | 7-688-005-02 | s | W 5, SMALL |

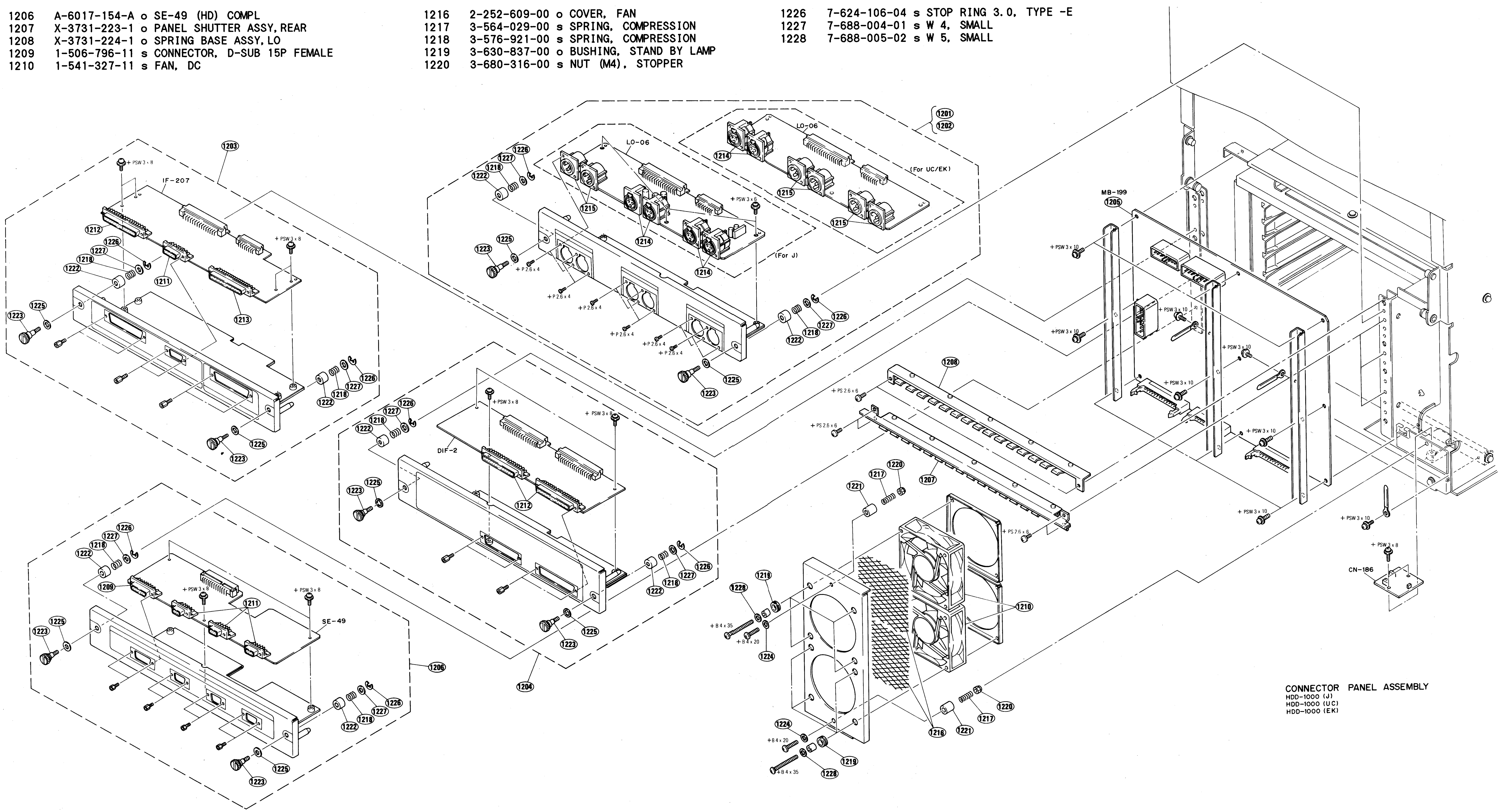
1201
1202
LO-06
(For UC/EK)
(For J)
1203
IF-207
1204
DIF-2
1205
MB-199
1206
SE-49
1207
1208
1209
1210
1211
1212
1213
1214
1215
1216
1217
1218
1219
1220
1221
1222
1223
1224
1225
1226
1227
1228
+PSW 3 x 8
+PSW 3 x 6
+PSW 3 x 10
+P 2.6 x 4
+PS 2.6 x 6
+B 4 x 35
+B 4 x 20
CN-186

CONNECTOR PANEL ASSEMBLY
HDD-1000 (J)
HDD-1000 (UC)
HDD-1000 (EK)

## TAPE TRANSPORT REAR ASSEMBLY, HDD-1000

| No. | Part No. | SP | Description |
|---|---|---|---|
| 1301 | A-6013-093-A | o | MOUNTED CIRCUIT BOARD, AP-22 |
| 1302 | A-6015-100-A | o | MOUNTED CIRCUIT BOARD, RM-43 |
| 1303 | A-6015-109-A | o | MOUNTED CIRCUIT BOARD, CD-37 |
| 1304 | 1-541-424-11 | s | BLOWER |
| 1305 ⚠ | 1-570-742-11 | s | SWITCH, AC POWER |
| 1306 | 3-701-188-XX | s | FOOT, RUBBER |
| 1307 | 3-714-558-01 | o | PLATE, PROTECTION |
| 1308 | 3-714-858-01 | s | RING, O |

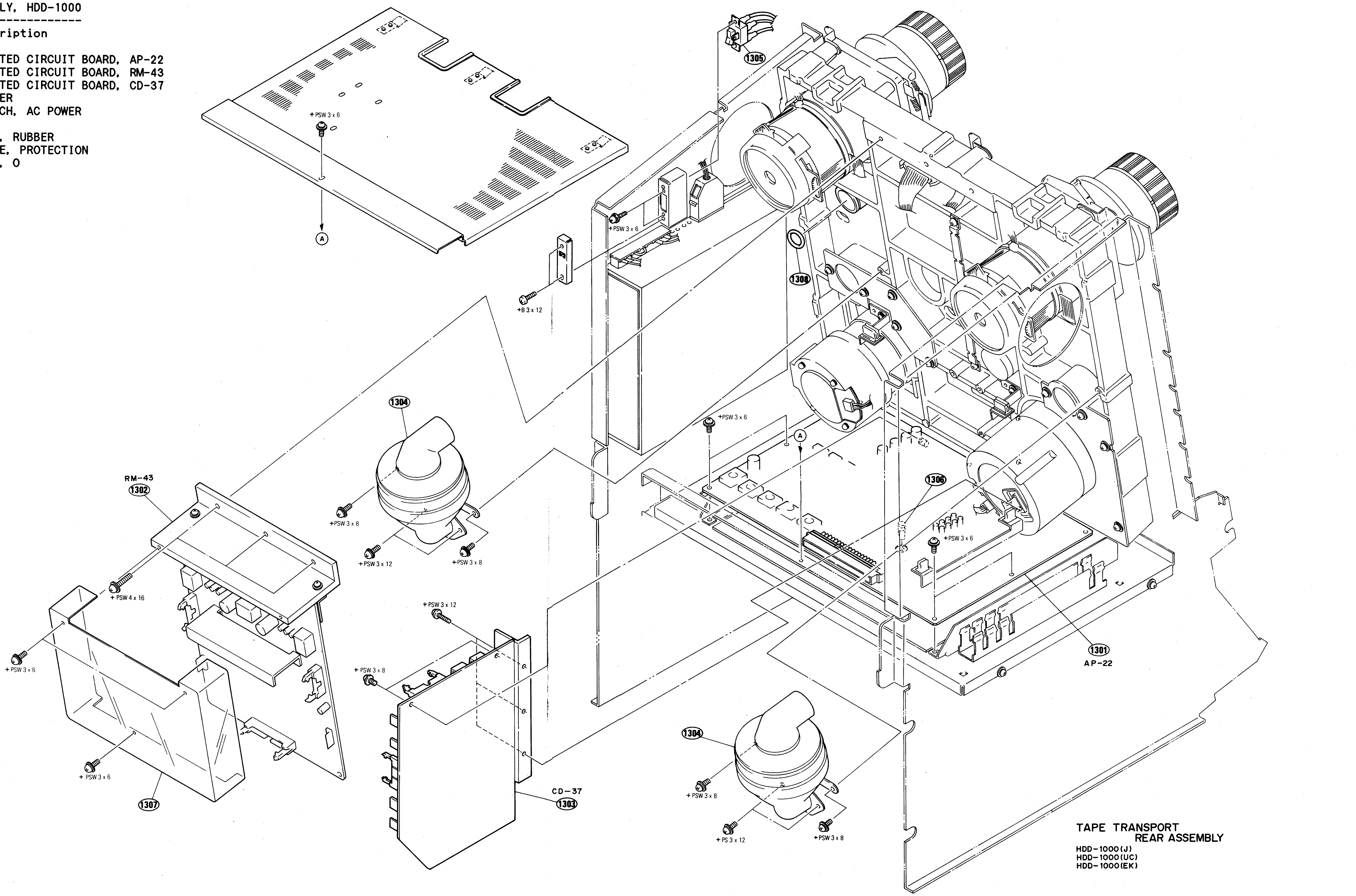
1305
+PSW 3 x 6
A
+PSW 3 x 6
1308
+B 3 x 12
1304
+PSW 3 x 6
A
RM-43
1302
+PSW 3 x 8
+PSW 3 x 12
+PSW 3 x 8
1306
+PSW 3 x 6
+PSW 4 x 16
+PSW 3 x 6
+PSW 3 x 12
+PSW 3 x 8
1301
AP-22
+PSW 3 x 6
1307
CD-37
1303
1304
+PSW 3 x 8
+PS 3 x 12
+PSW 3 x 8

TAPE TRANSPORT
REAR ASSEMBLY
HDD-1000(J)
HDD-1000(UC)
HDD-1000(EK)

## AC-92 BOARD

| Ref. No. or Q'ty | Part No. | SP | Description |
|---|---|---|---|
| 1pc | 1-628-216-11 | o | PRINTED CIRCUIT BOARD, AC-92 |
| CN908 | ⚠1-561-978-00 | o | CONNECTOR, 3P, FEMALE |
| CN911 | ⚠1-560-723-00 | o | CONNECTOR, 3P, MALE |
| CN912 | ⚠1-560-723-00 | o | CONNECTOR, 3P, MALE |
| CN913 | ⚠1-560-723-00 | o | CONNECTOR, 3P, MALE |
| CN914 | ⚠1-560-723-00 | o | CONNECTOR, 3P, MALE |

## AP-22 BOARD

| Ref. No. or Q'ty | Part No. | SP | Description |
|---|---|---|---|
| 1pc | A-6013-093-A | o | MOUNTED CIRCUIT BOARD, AP-22 |
| 1pc | 8-759-725-22 | s | IC PALCE16V8Q-25PC |
| 2pcs | 7-622-207-05 | s | N 2.6, TYPE 2 |
| 2pcs | 7-628-254-40 | s | SCREW +PS 2.6X12 |
| 3pcs | 7-682-947-01 | s | SCREW +PSW 3X6 |
| 4pcs | 7-682-948-01 | s | SCREW +PSW 3X8 |
| 8pcs | 7-682-948-01 | s | SCREW +PSW 3X8 |
| C1 | 1-124-510-11 | s | ELECT 220uF 20% 25V |
| C2 | 1-164-208-11 | s | CERAMIC 0.1uF 99% 50V |
| C3 | 1-124-510-11 | s | ELECT 220uF 20% 25V |
| C4 | 1-164-208-11 | s | CERAMIC 0.1uF 99% 50V |
| C5 | 1-164-208-11 | s | CERAMIC 0.1uF 99% 50V |
| C6 | 1-124-510-11 | s | ELECT 220uF 20% 25V |
| C7 | 1-164-208-11 | s | CERAMIC 0.1uF 99% 50V |
| C8 | 1-124-510-11 | s | ELECT 220uF 20% 25V |
| C9 | 1-124-604-00 | s | ELECT 330uF 20% 10V |
| C10 | 1-164-208-11 | s | CERAMIC 0.1uF 99% 50V |
| C11 | 1-124-604-00 | s | ELECT 330uF 20% 10V |
| C12 | 1-164-208-11 | s | CERAMIC 0.1uF 99% 50V |
| C13 | 1-164-208-11 | s | CERAMIC 0.1uF 99% 50V |
| C14 | 1-124-604-00 | s | ELECT 330uF 20% 10V |
| C15 | 1-164-208-11 | s | CERAMIC 0.1uF 99% 50V |
| C16 | 1-124-604-00 | s | ELECT 330uF 20% 10V |
| C17 | 1-126-108-11 | s | ELECT 56 20% 16V |
| C18 | 1-164-208-11 | s | CERAMIC 0.1uF 99% 50V |
| C19 | 1-126-108-11 | s | ELECT 56 20% 16V |
| C20 | 1-164-208-11 | s | CERAMIC 0.1uF 99% 50V |
| C21 | 1-126-108-11 | s | ELECT 56 20% 16V |
| C22 | 1-126-108-11 | s | ELECT 56 20% 16V |
| C23 | 1-164-208-11 | s | CERAMIC 0.1uF 99% 50V |
| C24 | 1-126-108-11 | s | ELECT 56 20% 16V |
| C25 | 1-164-208-11 | s | CERAMIC 0.1uF 99% 50V |
| C26 | 1-126-108-11 | s | ELECT 56 20% 16V |
| C27 | 1-164-208-11 | s | CERAMIC 0.1uF 99% 50V |
| C28 | 1-161-898-11 | s | CERAMIC 0.47uF 50V |
| C29 | 1-161-898-11 | s | CERAMIC 0.47uF 50V |
| C30 | 1-162-710-11 | s | CERAMIC 100PF 1% 50V |
| C31 | 1-161-898-11 | s | CERAMIC 0.47uF 50V |
| C32 | 1-130-471-00 | s | MYLAR 0.001uF 5% 50V |
| C33 | 1-162-672-11 | s | CERAMIC 27PF 5% 50V |
| C34 | 1-161-898-11 | s | CERAMIC 0.47uF 50V |
| C35 | 1-161-898-11 | s | CERAMIC 0.47uF 50V |
| C36 | 1-161-898-11 | s | CERAMIC 0.47uF 50V |
| C37 | 1-161-898-11 | s | CERAMIC 0.47uF 50V |
| C38 | 1-162-710-11 | s | CERAMIC 100PF 1% 50V |
| C39 | 1-161-898-11 | s | CERAMIC 0.47uF 50V |
| C40 | 1-130-471-00 | s | MYLAR 0.001uF 5% 50V |
| C41 | 1-161-898-11 | s | CERAMIC 0.47uF 50V |
| C42 | 1-162-672-11 | s | CERAMIC 27PF 5% 50V |
| C43 | 1-161-898-11 | s | CERAMIC 0.47uF 50V |
| C44 | 1-161-898-11 | s | CERAMIC 0.47uF 50V |
| C45 | 1-130-475-00 | s | MYLAR 0.0022uF 5% 50V |
| C46 | 1-161-898-11 | s | CERAMIC 0.47uF 50V |
| C47 | 1-131-365-00 | s | TANTALUM 10uF 10% 20V |
| C48 | 1-162-722-11 | s | CERAMIC 330PF 1% 50V |
| C49 | 1-161-898-11 | s | CERAMIC 0.47uF 50V |
| C50 | 1-161-898-11 | s | CERAMIC 0.47uF 50V |
| C51 | 1-162-722-11 | s | CERAMIC 330PF 1% 50V |

(AP-22 BOARD)

| Ref. No. or Q'ty | Part No. | SP | Description |
|---|---|---|---|
| C52 | 1-131-365-00 | s | TANTALUM 10uF 10% 20V |
| C53 | 1-162-714-11 | s | CERAMIC 150PF 1% 50V |
| C54 | 1-164-208-11 | s | CERAMIC 0.1uF 99% 50V |
| C55 | 1-164-208-11 | s | CERAMIC 0.1uF 99% 50V |
| C56 | 1-162-714-11 | s | CERAMIC 150PF 1% 50V |
| C57 | 1-130-479-00 | s | MYLAR 0.0047uF 5% 50V |
| C58 | 1-161-898-11 | s | CERAMIC 0.47uF 50V |
| C59 | 1-130-492-11 | s | MYLAR 0.056uF 5% 50V |
| C60 | 1-131-368-00 | s | TANTALUM 3.3uF 10% 16V |
| C61 | 1-164-208-11 | s | CERAMIC 0.1uF 99% 50V |
| C62 | 1-164-208-11 | s | CERAMIC 0.1uF 99% 50V |
| C63 | 1-161-898-11 | s | CERAMIC 0.47uF 50V |
| C65 | 1-131-365-00 | s | TANTALUM 10uF 10% 20V |
| C66 | 1-161-898-11 | s | CERAMIC 0.47uF 50V |
| C67 | 1-161-898-11 | s | CERAMIC 0.47uF 50V |
| C68 | 1-162-722-11 | s | CERAMIC 330PF 1% 50V |
| C69 | 1-161-898-11 | s | CERAMIC 0.47uF 50V |
| C70 | 1-130-475-00 | s | MYLAR 0.0022uF 5% 50V |
| C71 | 1-161-898-11 | s | CERAMIC 0.47uF 50V |
| C72 | 1-130-495-00 | s | MYLAR 0.1uF 5% 50V |
| C73 | 1-126-108-11 | s | ELECT 56 20% 16V |
| C74 | 1-164-208-11 | s | CERAMIC 0.1uF 99% 50V |
| C75 | 1-126-108-11 | s | ELECT 56 20% 16V |
| C76 | 1-164-208-11 | s | CERAMIC 0.1uF 99% 50V |
| C77 | 1-164-208-11 | s | CERAMIC 0.1uF 99% 50V |
| C78 | 1-164-208-11 | s | CERAMIC 0.1uF 99% 50V |
| C79 | 1-126-090-11 | s | ELECT 82 20% 10V |
| C80 | 1-126-090-11 | s | ELECT 82 20% 10V |
| C81 | 1-126-090-11 | s | ELECT 82 20% 10V |
| C82 | 1-126-090-11 | s | ELECT 82 20% 10V |
| C83 | 1-126-163-11 | s | ELECT 4.7MF 20% 50V |
| C84 | 1-131-587-11 | s | TANTALUM 0.68MF 5% 35V |
| C85 | 1-109-591-11 | s | MICA 0.0027 5% 500V |
| C86 | 1-162-728-11 | s | CERAMIC 560PF 1% 50V |
| C87 | 1-130-477-00 | s | MYLAR 0.0033uF 5% 50V |
| C88 | 1-130-477-00 | s | MYLAR 0.0033uF 5% 50V |
| C89 | 1-162-728-11 | s | CERAMIC 560PF 1% 50V |
| C90 | 1-164-208-11 | s | CERAMIC 0.1uF 99% 50V |
| C91 | 1-164-208-11 | s | CERAMIC 0.1uF 99% 50V |
| C92 | 1-161-898-11 | s | CERAMIC 0.47uF 50V |
| C93 | 1-164-208-11 | s | CERAMIC 0.1uF 99% 50V |
| C94 | 1-164-208-11 | s | CERAMIC 0.1uF 99% 50V |
| C95 | 1-164-208-11 | s | CERAMIC 0.1uF 99% 50V |
| C96 | 1-164-208-11 | s | CERAMIC 0.1uF 99% 50V |
| C97 | 1-164-208-11 | s | CERAMIC 0.1uF 99% 50V |
| C98 | 1-164-208-11 | s | CERAMIC 0.1uF 99% 50V |
| C99 | 1-164-208-11 | s | CERAMIC 0.1uF 99% 50V |
| C100 | 1-164-208-11 | s | CERAMIC 0.1uF 99% 50V |
| C101 | 1-161-898-11 | s | CERAMIC 0.47uF 50V |
| C102 | 1-161-898-11 | s | CERAMIC 0.47uF 50V |
| C103 | 1-162-710-11 | s | CERAMIC 100PF 1% 50V |
| C104 | 1-161-898-11 | s | CERAMIC 0.47uF 50V |
| C105 | 1-162-708-11 | s | CERAMIC 82PF 1% 50V |
| C106 | 1-161-898-11 | s | CERAMIC 0.47uF 50V |
| C107 | 1-162-672-11 | s | CERAMIC 27PF 5% 50V |
| C108 | 1-130-475-00 | s | MYLAR 0.0022uF 5% 50V |
| C109 | 1-131-347-00 | s | TANTALUM 1uF 10% 35V |
| C121 | 1-161-898-11 | s | CERAMIC 0.47uF 50V |
| C122 | 1-161-898-11 | s | CERAMIC 0.47uF 50V |

(AP-22 BOARD)

| Ref. No. or Q'ty | Part No. | SP | Description |
|---|---|---|---|
| C123 | 1-162-710-11 | s | CERAMIC 100PF 1% 50V |
| C124 | 1-161-898-11 | s | CERAMIC 0.47uF 50V |
| C125 | 1-162-708-11 | s | CERAMIC 82PF 1% 50V |
| C126 | 1-161-898-11 | s | CERAMIC 0.47uF 50V |
| C127 | 1-162-672-11 | s | CERAMIC 27PF 5% 50V |
| C128 | 1-130-475-00 | s | MYLAR 0.0022uF 5% 50V |
| C129 | 1-131-347-00 | s | TANTALUM 1uF 10% 35V |
| C141 | 1-161-898-11 | s | CERAMIC 0.47uF 50V |
| C142 | 1-161-898-11 | s | CERAMIC 0.47uF 50V |
| C143 | 1-162-710-11 | s | CERAMIC 100PF 1% 50V |
| C144 | 1-161-898-11 | s | CERAMIC 0.47uF 50V |
| C145 | 1-162-708-11 | s | CERAMIC 82PF 1% 50V |
| C146 | 1-161-898-11 | s | CERAMIC 0.47uF 50V |
| C147 | 1-162-672-11 | s | CERAMIC 27PF 5% 50V |
| C148 | 1-130-475-00 | s | MYLAR 0.0022uF 5% 50V |
| C149 | 1-131-347-00 | s | TANTALUM 1uF 10% 35V |
| C161 | 1-161-898-11 | s | CERAMIC 0.47uF 50V |
| C162 | 1-161-898-11 | s | CERAMIC 0.47uF 50V |
| C163 | 1-162-710-11 | s | CERAMIC 100PF 1% 50V |
| C164 | 1-161-898-11 | s | CERAMIC 0.47uF 50V |
| C165 | 1-162-708-11 | s | CERAMIC 82PF 1% 50V |
| C166 | 1-161-898-11 | s | CERAMIC 0.47uF 50V |
| C167 | 1-162-672-11 | s | CERAMIC 27PF 5% 50V |
| C168 | 1-130-475-00 | s | MYLAR 0.0022uF 5% 50V |
| C169 | 1-131-347-00 | s | TANTALUM 1uF 10% 35V |
| C181 | 1-161-898-11 | s | CERAMIC 0.47uF 50V |
| C182 | 1-161-898-11 | s | CERAMIC 0.47uF 50V |
| C183 | 1-162-710-11 | s | CERAMIC 100PF 1% 50V |
| C184 | 1-161-898-11 | s | CERAMIC 0.47uF 50V |
| C185 | 1-162-708-11 | s | CERAMIC 82PF 1% 50V |
| C186 | 1-161-898-11 | s | CERAMIC 0.47uF 50V |
| C187 | 1-162-672-11 | s | CERAMIC 27PF 5% 50V |
| C188 | 1-130-475-00 | s | MYLAR 0.0022uF 5% 50V |
| C189 | 1-131-347-00 | s | TANTALUM 1uF 10% 35V |
| C201 | 1-161-898-11 | s | CERAMIC 0.47uF 50V |
| C202 | 1-161-898-11 | s | CERAMIC 0.47uF 50V |
| C203 | 1-162-710-11 | s | CERAMIC 100PF 1% 50V |
| C204 | 1-161-898-11 | s | CERAMIC 0.47uF 50V |
| C205 | 1-162-708-11 | s | CERAMIC 82PF 1% 50V |
| C206 | 1-161-898-11 | s | CERAMIC 0.47uF 50V |
| C207 | 1-162-672-11 | s | CERAMIC 27PF 5% 50V |
| C208 | 1-130-475-00 | s | MYLAR 0.0022uF 5% 50V |
| C209 | 1-131-347-00 | s | TANTALUM 1uF 10% 35V |
| C221 | 1-161-898-11 | s | CERAMIC 0.47uF 50V |
| C222 | 1-161-898-11 | s | CERAMIC 0.47uF 50V |
| C223 | 1-162-710-11 | s | CERAMIC 100PF 1% 50V |
| C224 | 1-161-898-11 | s | CERAMIC 0.47uF 50V |
| C225 | 1-162-708-11 | s | CERAMIC 82PF 1% 50V |
| C226 | 1-161-898-11 | s | CERAMIC 0.47uF 50V |
| C227 | 1-162-672-11 | s | CERAMIC 27PF 5% 50V |
| C228 | 1-130-475-00 | s | MYLAR 0.0022uF 5% 50V |
| C229 | 1-131-347-00 | s | TANTALUM 1uF 10% 35V |
| C241 | 1-161-898-11 | s | CERAMIC 0.47uF 50V |
| C242 | 1-161-898-11 | s | CERAMIC 0.47uF 50V |
| C243 | 1-162-710-11 | s | CERAMIC 100PF 1% 50V |
| C244 | 1-161-898-11 | s | CERAMIC 0.47uF 50V |
| C245 | 1-162-708-11 | s | CERAMIC 82PF 1% 50V |
| C246 | 1-161-898-11 | s | CERAMIC 0.47uF 50V |
| C247 | 1-162-672-11 | s | CERAMIC 27PF 5% 50V |

(AP-22 BOARD)

| Ref. No.<br>or Q'ty | Part No. | SP | Description |
|---|---|---|---|
| C248 | 1-130-475-00 | s | MYLAR 0.0022uF 5% 50V |
| C249 | 1-131-347-00 | s | TANTALUM 1uF 10% 35V |
| C261 | 1-161-898-11 | s | CERAMIC 0.47uF 50V |
| C262 | 1-161-898-11 | s | CERAMIC 0.47uF 50V |
| C263 | 1-162-710-11 | s | CERAMIC 100PF 1% 50V |
| C264 | 1-161-898-11 | s | CERAMIC 0.47uF 50V |
| C265 | 1-162-708-11 | s | CERAMIC 82PF 1% 50V |
| C266 | 1-161-898-11 | s | CERAMIC 0.47uF 50V |
| C267 | 1-162-672-11 | s | CERAMIC 27PF 5% 50V |
| C268 | 1-130-475-00 | s | MYLAR 0.0022uF 5% 50V |
| C269 | 1-131-347-00 | s | TANTALUM 1uF 10% 35V |
| C281 | 1-161-898-11 | s | CERAMIC 0.47uF 50V |
| C282 | 1-161-898-11 | s | CERAMIC 0.47uF 50V |
| C283 | 1-162-710-11 | s | CERAMIC 100PF 1% 50V |
| C284 | 1-161-898-11 | s | CERAMIC 0.47uF 50V |
| C285 | 1-162-708-11 | s | CERAMIC 82PF 1% 50V |
| C286 | 1-161-898-11 | s | CERAMIC 0.47uF 50V |
| C287 | 1-162-672-11 | s | CERAMIC 27PF 5% 50V |
| C288 | 1-130-475-00 | s | MYLAR 0.0022uF 5% 50V |
| C289 | 1-131-347-00 | s | TANTALUM 1uF 10% 35V |
| C301 | 1-161-898-11 | s | CERAMIC 0.47uF 50V |
| C302 | 1-161-898-11 | s | CERAMIC 0.47uF 50V |
| C303 | 1-162-710-11 | s | CERAMIC 100PF 1% 50V |
| C304 | 1-161-898-11 | s | CERAMIC 0.47uF 50V |
| C305 | 1-162-708-11 | s | CERAMIC 82PF 1% 50V |
| C306 | 1-161-898-11 | s | CERAMIC 0.47uF 50V |
| C307 | 1-162-672-11 | s | CERAMIC 27PF 5% 50V |
| C308 | 1-130-475-00 | s | MYLAR 0.0022uF 5% 50V |
| C309 | 1-131-347-00 | s | TANTALUM 1uF 10% 35V |
| C321 | 1-161-898-11 | s | CERAMIC 0.47uF 50V |
| C322 | 1-161-898-11 | s | CERAMIC 0.47uF 50V |
| C323 | 1-162-710-11 | s | CERAMIC 100PF 1% 50V |
| C324 | 1-161-898-11 | s | CERAMIC 0.47uF 50V |
| C325 | 1-162-708-11 | s | CERAMIC 82PF 1% 50V |
| C326 | 1-161-898-11 | s | CERAMIC 0.47uF 50V |
| C327 | 1-162-672-11 | s | CERAMIC 27PF 5% 50V |
| C328 | 1-130-475-00 | s | MYLAR 0.0022uF 5% 50V |
| C329 | 1-131-347-00 | s | TANTALUM 1uF 10% 35V |
| C341 | 1-161-898-11 | s | CERAMIC 0.47uF 50V |
| C342 | 1-161-898-11 | s | CERAMIC 0.47uF 50V |
| C343 | 1-162-710-11 | s | CERAMIC 100PF 1% 50V |
| C344 | 1-161-898-11 | s | CERAMIC 0.47uF 50V |
| C345 | 1-162-708-11 | s | CERAMIC 82PF 1% 50V |
| C346 | 1-161-898-11 | s | CERAMIC 0.47uF 50V |
| C347 | 1-162-672-11 | s | CERAMIC 27PF 5% 50V |
| C348 | 1-130-475-00 | s | MYLAR 0.0022uF 5% 50V |
| C349 | 1-131-347-00 | s | TANTALUM 1uF 10% 35V |
| C361 | 1-161-898-11 | s | CERAMIC 0.47uF 50V |
| C362 | 1-161-898-11 | s | CERAMIC 0.47uF 50V |
| C363 | 1-162-710-11 | s | CERAMIC 100PF 1% 50V |
| C364 | 1-161-898-11 | s | CERAMIC 0.47uF 50V |
| C365 | 1-162-708-11 | s | CERAMIC 82PF 1% 50V |
| C366 | 1-161-898-11 | s | CERAMIC 0.47uF 50V |
| C367 | 1-162-672-11 | s | CERAMIC 27PF 5% 50V |
| C368 | 1-130-475-00 | s | MYLAR 0.0022uF 5% 50V |
| C369 | 1-131-347-00 | s | TANTALUM 1uF 10% 35V |
| C381 | 1-161-898-11 | s | CERAMIC 0.47uF 50V |
| C382 | 1-161-898-11 | s | CERAMIC 0.47uF 50V |
| C383 | 1-162-710-11 | s | CERAMIC 100PF 1% 50V |

(AP-22 BOARD)

| Ref. No.<br>or Q'ty | Part No. | SP | Description |
|---|---|---|---|
| C384 | 1-161-898-11 | s | CERAMIC 0.47uF 50V |
| C385 | 1-162-708-11 | s | CERAMIC 82PF 1% 50V |
| C386 | 1-161-898-11 | s | CERAMIC 0.47uF 50V |
| C387 | 1-162-672-11 | s | CERAMIC 27PF 5% 50V |
| C388 | 1-130-475-00 | s | MYLAR 0.0022uF 5% 50V |
| C389 | 1-131-347-00 | s | TANTALUM 1uF 10% 35V |
| C401 | 1-161-898-11 | s | CERAMIC 0.47uF 50V |
| C402 | 1-161-898-11 | s | CERAMIC 0.47uF 50V |
| C403 | 1-162-710-11 | s | CERAMIC 100PF 1% 50V |
| C404 | 1-161-898-11 | s | CERAMIC 0.47uF 50V |
| C405 | 1-162-708-11 | s | CERAMIC 82PF 1% 50V |
| C406 | 1-161-898-11 | s | CERAMIC 0.47uF 50V |
| C407 | 1-162-672-11 | s | CERAMIC 27PF 5% 50V |
| C408 | 1-130-475-00 | s | MYLAR 0.0022uF 5% 50V |
| C409 | 1-131-347-00 | s | TANTALUM 1uF 10% 35V |
| C421 | 1-164-208-11 | s | CERAMIC 0.1uF 99% 50V |
| C422 | 1-162-672-11 | s | CERAMIC 27PF 5% 50V |
| C423 | 1-130-473-00 | s | MYLAR 0.0015uF 5% 50V |
| C424 | 1-162-726-11 | s | CERAMIC 470PF 1% 50V |
| C425 | 1-162-671-11 | s | CERAMIC 22PF 5% 50V |
| C426 | 1-109-682-00 | s | MICA 240PF 1% 500V |
| C427 | 1-109-630-00 | s | MICA 270PF 2% 500V |
| C428 | 1-109-631-00 | s | MICA 330PF 2% 500V |
| C429 | 1-126-108-11 | s | ELECT 56 20% 16V |
| C430 | 1-126-108-11 | s | ELECT 56 20% 16V |
| C431 | 1-126-096-11 | s | ELECT 10uF 20% 35V |
| C441 | 1-164-208-11 | s | CERAMIC 0.1uF 99% 50V |
| C442 | 1-162-672-11 | s | CERAMIC 27PF 5% 50V |
| C443 | 1-130-473-00 | s | MYLAR 0.0015uF 5% 50V |
| C444 | 1-162-726-11 | s | CERAMIC 470PF 1% 50V |
| C445 | 1-162-671-11 | s | CERAMIC 22PF 5% 50V |
| C446 | 1-109-682-00 | s | MICA 240PF 1% 500V |
| C447 | 1-109-630-00 | s | MICA 270PF 2% 500V |
| C448 | 1-109-631-00 | s | MICA 330PF 2% 500V |
| C449 | 1-126-108-11 | s | ELECT 56 20% 16V |
| C450 | 1-126-108-11 | s | ELECT 56 20% 16V |
| C451 | 1-126-096-11 | s | ELECT 10uF 20% 35V |
| C461 | 1-164-208-11 | s | CERAMIC 0.1uF 99% 50V |
| C462 | 1-162-672-11 | s | CERAMIC 27PF 5% 50V |
| C463 | 1-130-473-00 | s | MYLAR 0.0015uF 5% 50V |
| C464 | 1-162-726-11 | s | CERAMIC 470PF 1% 50V |
| C465 | 1-162-671-11 | s | CERAMIC 22PF 5% 50V |
| C466 | 1-109-682-00 | s | MICA 240PF 1% 500V |
| C467 | 1-109-630-00 | s | MICA 270PF 2% 500V |
| C468 | 1-109-631-00 | s | MICA 330PF 2% 500V |
| C469 | 1-126-108-11 | s | ELECT 56 20% 16V |
| C470 | 1-126-108-11 | s | ELECT 56 20% 16V |
| C471 | 1-126-096-11 | s | ELECT 10uF 20% 35V |
| C481 | 1-164-208-11 | s | CERAMIC 0.1uF 99% 50V |
| C482 | 1-164-208-11 | s | CERAMIC 0.1uF 99% 50V |
| C483 | 1-164-208-11 | s | CERAMIC 0.1uF 99% 50V |
| C484 | 1-164-208-11 | s | CERAMIC 0.1uF 99% 50V |
| C501 | 1-164-208-11 | s | CERAMIC 0.1uF 99% 50V |
| C502 | 1-164-208-11 | s | CERAMIC 0.1uF 99% 50V |
| C503 | 1-164-208-11 | s | CERAMIC 0.1uF 99% 50V |
| C504 | 1-164-208-11 | s | CERAMIC 0.1uF 99% 50V |
| C521 | 1-164-208-11 | s | CERAMIC 0.1uF 99% 50V |
| C522 | 1-164-208-11 | s | CERAMIC 0.1uF 99% 50V |
| C523 | 1-164-208-11 | s | CERAMIC 0.1uF 99% 50V |

(AP-22 BOARD)

| Ref. No.<br>or Q'ty | Part No. | SP | Description |
|---|---|---|---|
| C524 | 1-164-208-11 | s | CERAMIC 0.1uF 99% 50V |
| C541 | 1-164-208-11 | s | CERAMIC 0.1uF 99% 50V |
| C542 | 1-164-208-11 | s | CERAMIC 0.1uF 99% 50V |
| C543 | 1-164-208-11 | s | CERAMIC 0.1uF 99% 50V |
| C544 | 1-164-208-11 | s | CERAMIC 0.1uF 99% 50V |
| C561 | 1-164-208-11 | s | CERAMIC 0.1uF 99% 50V |
| C562 | 1-164-208-11 | s | CERAMIC 0.1uF 99% 50V |
| C563 | 1-164-208-11 | s | CERAMIC 0.1uF 99% 50V |
| C564 | 1-164-208-11 | s | CERAMIC 0.1uF 99% 50V |
| C581 | 1-164-208-11 | s | CERAMIC 0.1uF 99% 50V |
| C582 | 1-164-208-11 | s | CERAMIC 0.1uF 99% 50V |
| C583 | 1-164-208-11 | s | CERAMIC 0.1uF 99% 50V |
| C584 | 1-164-208-11 | s | CERAMIC 0.1uF 99% 50V |
| C601 | 1-164-208-11 | s | CERAMIC 0.1uF 99% 50V |
| C602 | 1-130-471-00 | s | MYLAR 0.001uF 5% 50V |
| C603 | 1-164-208-11 | s | CERAMIC 0.1uF 99% 50V |
| C604 | 1-130-471-00 | s | MYLAR 0.001uF 5% 50V |
| C605 | 1-162-710-11 | s | CERAMIC 100PF 1% 50V |
| C606 | 1-164-208-11 | s | CERAMIC 0.1uF 99% 50V |
| C607 | 1-130-471-00 | s | MYLAR 0.001uF 5% 50V |
| C608 | 1-162-710-11 | s | CERAMIC 100PF 1% 50V |
| C609 | 1-164-208-11 | s | CERAMIC 0.1uF 99% 50V |
| C610 | 1-164-208-11 | s | CERAMIC 0.1uF 99% 50V |
| C611 | 1-131-381-00 | s | TANTALUM 47uF 10% 10V |
| C612 | 1-164-208-11 | s | CERAMIC 0.1uF 99% 50V |
| C613 | 1-164-208-11 | s | CERAMIC 0.1uF 99% 50V |
| C614 | 1-162-720-11 | s | CERAMIC 270PF 1% 50V |
| C615 | 1-162-720-11 | s | CERAMIC 270PF 1% 50V |
| C616 | 1-162-720-11 | s | CERAMIC 270PF 1% 50V |
| C617 | 1-162-720-11 | s | CERAMIC 270PF 1% 50V |
| C618 | 1-131-374-00 | s | TANTALUM 33uF 10% 16V |
| C619 | 1-131-374-00 | s | TANTALUM 33uF 10% 16V |
| C620 | 1-131-374-00 | s | TANTALUM 33uF 10% 16V |
| C621 | 1-131-374-00 | s | TANTALUM 33uF 10% 16V |
| C625 | 1-130-479-00 | s | MYLAR 0.0047uF 5% 50V |
| C626 | 1-131-395-00 | s | TANTALUM 100uF 10% 3.15V |
| C627 | 1-130-471-00 | s | MYLAR 0.001uF 5% 50V |
| C628 | 1-130-471-00 | s | MYLAR 0.001uF 5% 50V |
| CN11 | 1-506-468-11 | o | CONNECTOR, 3P, MALE |
| CN12 | 1-506-468-11 | o | CONNECTOR, 3P, MALE |
| CN13 | 1-506-468-11 | o | CONNECTOR, 3P, MALE |
| CN14 | 1-506-468-11 | o | CONNECTOR, 3P, MALE |
| CN21 | 1-506-468-11 | o | CONNECTOR, 3P, MALE |
| CN22 | 1-506-468-11 | o | CONNECTOR, 3P, MALE |
| CN23 | 1-506-468-11 | o | CONNECTOR, 3P, MALE |
| CN24 | 1-506-468-11 | o | CONNECTOR, 3P, MALE |
| CN31 | 1-506-468-11 | o | CONNECTOR, 3P, MALE |
| CN32 | 1-506-468-11 | o | CONNECTOR, 3P, MALE |
| CN33 | 1-506-468-11 | o | CONNECTOR, 3P, MALE |
| CN34 | 1-506-468-11 | o | CONNECTOR, 3P, MALE |
| CN41 | 1-506-468-11 | o | CONNECTOR, 3P, MALE |
| CN42 | 1-506-468-11 | o | CONNECTOR, 3P, MALE |
| CN43 | 1-506-468-11 | o | CONNECTOR, 3P, MALE |
| CN44 | 1-506-468-11 | o | CONNECTOR, 3P, MALE |
| CN51 | 1-506-468-11 | o | CONNECTOR, 3P, MALE |
| CN52 | 1-506-468-11 | o | CONNECTOR, 3P, MALE |
| CN53 | 1-506-468-11 | o | CONNECTOR, 3P, MALE |
| CN91 | 1-506-468-11 | o | CONNECTOR, 3P, MALE |
| CN92 | 1-506-468-11 | o | CONNECTOR, 3P, MALE |

(AP-22 BOARD)

| Ref. No.<br>or Q'ty | Part No. | SP | Description |
|---|---|---|---|
| CN317 | 1-506-748-11 | s | CONNECTOR, DIN 96P, MALE |
| CN356 | 1-568-002-11 | o | CONNECTOR, 26P, MALE |
| CN357 | 1-560-305-00 | o | CONNECTOR, IL 10P, MALE |
| CN358 | 1-560-300-00 | o | CONNECTOR, IL 3P, MALE |
| D1 | 8-719-911-19 | s | DIODE 1SS119 |
| IC1 | 8-759-980-76 | s | IC LT1028CN8 |
| IC2 | 8-752-033-89 | s | IC CXA1297P |
| IC3 | 8-759-980-76 | s | IC LT1028CN8 |
| IC4 | 8-752-033-89 | s | IC CXA1297P |
| IC5 | 8-759-980-76 | s | IC LT1028CN8 |
| IC6 | 8-752-033-89 | s | IC CXA1297P |
| IC7 | 8-759-103-19 | s | IC UPC319C |
| IC8 | 8-759-980-76 | s | IC LT1028CN8 |
| IC9 | 8-759-103-19 | s | IC UPC319C |
| IC10 | 8-759-103-19 | s | IC UPC319C |
| IC11 | 8-752-033-89 | s | IC CXA1297P |
| IC12 | 8-759-980-76 | s | IC LT1028CN8 |
| IC13 | 8-759-921-99 | s | IC SN74HCT541N |
| IC14 | 8-759-007-09 | s | IC MC74HC540N |
| IC15 | 8-759-708-05 | s | IC NJM78L05A |
| IC16 | 8-759-700-65 | s | IC NJM79L05A |
| IC17 | 8-759-007-21 | s | IC MC74HC4053N |
| IC18 | 8-759-007-21 | s | IC MC74HC4053N |
| IC19 | 8-759-602-48 | s | IC M5201L |
| IC20 | 8-759-245-86 | s | IC M5F7912L |
| IC21 | 8-759-231-58 | s | IC M5F7812L |
| IC22 | 8-759-245-87 | s | IC M5F7915L |
| IC23 | 8-759-231-59 | s | IC M5F7815L |
| IC24 | 8-759-231-58 | s | IC M5F7812L |
| IC25 | 8-759-245-86 | s | IC M5F7912L |
| IC26 | 8-759-916-25 | s | IC SN74HC32N |
| IC27 | 8-759-916-25 | s | IC SN74HC32N |
| IC28 | 8-759-700-40 | s | IC NJM4560S |
| IC29 | 8-759-700-40 | s | IC NJM4560S |
| IC30 | 8-759-916-29 | s | IC SN74HC74N |
| IC31 | 8-759-981-35 | s | IC CD74HC4015E |
| IC32 | 8-759-001-63 | s | IC MC74HC595N |
| IC33 | 8-759-001-63 | s | IC MC74HC595N |
| IC34 | 8-759-241-43 | s | IC TC74HC423AP |
| IC35 | 8-759-241-43 | s | IC TC74HC423AP |
| IC36 | 8-759-241-43 | s | IC TC74HC423AP |
| IC37 | 8-759-142-11 | s | IC DASH-012 |
| IC38 | 8-759-916-29 | s | IC SN74HC74N |
| IC39 | 8-759-552-80 | s | IC PALCE16V8-AP22-01-1 |
| IC101 | 8-759-980-76 | s | IC LT1028CN8 |
| IC102 | 8-752-033-89 | s | IC CXA1297P |
| IC121 | 8-759-980-76 | s | IC LT1028CN8 |
| IC122 | 8-752-033-89 | s | IC CXA1297P |
| IC141 | 8-759-980-76 | s | IC LT1028CN8 |
| IC142 | 8-752-033-89 | s | IC CXA1297P |
| IC161 | 8-759-980-76 | s | IC LT1028CN8 |
| IC162 | 8-752-033-89 | s | IC CXA1297P |
| IC181 | 8-759-980-76 | s | IC LT1028CN8 |
| IC182 | 8-752-033-89 | s | IC CXA1297P |
| IC201 | 8-759-980-76 | s | IC LT1028CN8 |
| IC202 | 8-752-033-89 | s | IC CXA1297P |
| IC221 | 8-759-980-76 | s | IC LT1028CN8 |
| IC222 | 8-752-033-89 | s | IC CXA1297P |

(AP-22 BOARD)

| Ref. No. or Q'ty | Part No. | SP | Description |
|---|---|---|---|
| IC241 | 8-759-980-76 | s | IC LT1028CN8 |
| IC242 | 8-752-033-89 | s | IC CXA1297P |
| IC261 | 8-759-980-76 | s | IC LT1028CN8 |
| IC262 | 8-752-033-89 | s | IC CXA1297P |
| IC281 | 8-759-980-76 | s | IC LT1028CN8 |
| IC282 | 8-752-033-89 | s | IC CXA1297P |
| IC301 | 8-759-980-76 | s | IC LT1028CN8 |
| IC302 | 8-752-033-89 | s | IC CXA1297P |
| IC321 | 8-759-980-76 | s | IC LT1028CN8 |
| IC322 | 8-752-033-89 | s | IC CXA1297P |
| IC341 | 8-759-980-76 | s | IC LT1028CN8 |
| IC342 | 8-752-033-89 | s | IC CXA1297P |
| IC361 | 8-759-980-76 | s | IC LT1028CN8 |
| IC362 | 8-752-033-89 | s | IC CXA1297P |
| IC381 | 8-759-980-76 | s | IC LT1028CN8 |
| IC382 | 8-752-033-89 | s | IC CXA1297P |
| IC401 | 8-759-980-76 | s | IC LT1028CN8 |
| IC402 | 8-752-033-89 | s | IC CXA1297P |
| IC421 | 8-741-122-50 | s | IC BX-1225 |
| IC441 | 8-741-122-50 | s | IC BX-1225 |
| IC461 | 8-741-122-50 | s | IC BX-1225 |
| IC481 | 1-808-620-11 | s | IC DASH-011 |
| IC482 | 1-808-620-11 | s | IC DASH-011 |
| IC501 | 1-808-620-11 | s | IC DASH-011 |
| IC502 | 1-808-620-11 | s | IC DASH-011 |
| IC521 | 1-808-620-11 | s | IC DASH-011 |
| IC522 | 1-808-620-11 | s | IC DASH-011 |
| IC541 | 1-808-620-11 | s | IC DASH-011 |
| IC542 | 1-808-620-11 | s | IC DASH-011 |
| IC561 | 1-808-620-11 | s | IC DASH-011 |
| IC562 | 1-808-620-11 | s | IC DASH-011 |
| IC581 | 1-808-620-11 | s | IC DASH-011 |
| IC582 | 1-808-620-11 | s | IC DASH-011 |
| JP1 | 1-566-388-11 | s | CONNECTOR, 8P, MALE |
| JP2 | 1-566-388-11 | s | CONNECTOR, 8P, MALE |
| JP421 | 1-566-388-11 | s | CONNECTOR, 8P, MALE |
| JP422 | 1-566-388-11 | s | CONNECTOR, 8P, MALE |
| JP423 | 1-566-388-11 | s | CONNECTOR, 8P, MALE |
| JP441 | 1-566-388-11 | s | CONNECTOR, 8P, MALE |
| JP442 | 1-566-388-11 | s | CONNECTOR, 8P, MALE |
| JP443 | 1-566-388-11 | s | CONNECTOR, 8P, MALE |
| JP461 | 1-566-388-11 | s | CONNECTOR, 8P, MALE |
| JP462 | 1-566-388-11 | s | CONNECTOR, 8P, MALE |
| JP463 | 1-566-388-11 | s | CONNECTOR, 8P, MALE |
| JS1 | 1-563-859-11 | s | PLUG, SHORTING |
| JS421 | 1-563-859-11 | s | PLUG, SHORTING |
| JS441 | 1-563-859-11 | s | PLUG, SHORTING |
| JS461 | 1-563-859-11 | s | PLUG, SHORTING |
| L1 | 1-421-370-00 | s | COIL, CHOKE |
| L2 | 1-421-370-00 | s | COIL, CHOKE |
| L3 | 1-421-370-00 | s | COIL, CHOKE |
| L4 | 1-421-370-00 | s | COIL, CHOKE |
| L5 | 1-410-425-11 | s | INDUCTOR 33UH |
| LV1 | 1-407-260-00 | s | INDUCTOR 68UH |
| LV421 | 1-407-297-00 | s | INDUCTOR, VAR 3.5mH |
| LV422 | 1-407-284-00 | s | INDUCTOR, VAR 1mH |
| LV441 | 1-407-297-00 | s | INDUCTOR, VAR 3.5mH |
| LV442 | 1-407-284-00 | s | INDUCTOR, VAR 1mH |

(AP-22 BOARD)

| Ref. No. or Q'ty | Part No. | SP | Description |
|---|---|---|---|
| LV461 | 1-407-297-00 | s | INDUCTOR, VAR 3.5mH |
| LV462 | 1-407-284-00 | s | INDUCTOR, VAR 1mH |
| Q1 | 8-729-900-61 | s | TRANSISTOR DTA114ES |
| Q2 | 8-729-203-49 | s | TRANSISTOR 2SC3327-B |
| Q3 | 8-729-202-03 | s | TRANSISTOR 2SD1408 |
| Q4 | 8-729-203-49 | s | TRANSISTOR 2SC3327-B |
| Q5 | 8-729-202-99 | s | TRANSISTOR 2SB1016-Y |
| Q6 | 8-729-203-49 | s | TRANSISTOR 2SC3327-B |
| Q7 | 8-729-202-03 | s | TRANSISTOR 2SD1408 |
| Q8 | 8-729-203-49 | s | TRANSISTOR 2SC3327-B |
| Q9 | 8-729-202-99 | s | TRANSISTOR 2SB1016-Y |
| Q10 | 8-729-900-61 | s | TRANSISTOR DTA114ES |
| Q11 | 8-729-140-96 | s | TRANSISTOR 2SD774-4 |
| Q12 | 8-729-202-03 | s | TRANSISTOR 2SD1408 |
| Q13 | 8-729-202-03 | s | TRANSISTOR 2SD1408 |
| Q14 | 8-729-900-89 | s | TRANSISTOR DTC144ES |
| Q15 | 8-729-203-49 | s | TRANSISTOR 2SC3327-B |
| Q16 | 8-729-900-89 | s | TRANSISTOR DTC144ES |
| Q421 | 8-729-900-89 | s | TRANSISTOR DTC144ES |
| Q441 | 8-729-900-89 | s | TRANSISTOR DTC144ES |
| Q461 | 8-729-900-89 | s | TRANSISTOR DTC144ES |
| R1 | 1-215-428-00 | s | METAL 2K 1% 1/6W |
| R2 | 1-215-397-00 | s | METAL 100 1% 1/6W |
| R3 | 1-215-405-00 | s | METAL 220 1% 1/6W |
| R4 | 1-215-405-00 | s | METAL 220 1% 1/6W |
| R5 | 1-215-421-00 | s | METAL 1K 1% 1/6W |
| R6 | 1-215-410-00 | s | METAL 360 1% 1/6W |
| R7 | 1-215-443-00 | s | METAL 8.2K 1% 1/6W |
| R8 | 1-215-398-00 | s | METAL 110 1% 1/6W |
| R9 | 1-215-405-00 | s | METAL 220 1% 1/6W |
| R10 | 1-215-405-00 | s | METAL 220 1% 1/6W |
| R11 | 1-215-397-00 | s | METAL 100 1% 1/6W |
| R12 | 1-215-432-00 | s | METAL 3K 1% 1/6W |
| R13 | 1-215-428-00 | s | METAL 2K 1% 1/6W |
| R14 | 1-215-397-00 | s | METAL 100 1% 1/6W |
| R15 | 1-215-405-00 | s | METAL 220 1% 1/6W |
| R16 | 1-215-405-00 | s | METAL 220 1% 1/6W |
| R17 | 1-215-421-00 | s | METAL 1K 1% 1/6W |
| R18 | 1-215-410-00 | s | METAL 360 1% 1/6W |
| R19 | 1-215-443-00 | s | METAL 8.2K 1% 1/6W |
| R20 | 1-215-398-00 | s | METAL 110 1% 1/6W |
| R21 | 1-215-405-00 | s | METAL 220 1% 1/6W |
| R22 | 1-215-405-00 | s | METAL 220 1% 1/6W |
| R23 | 1-215-404-00 | s | METAL 200 1% 1/6W |
| R24 | 1-215-432-00 | s | METAL 3K 1% 1/6W |
| R25 | 1-215-421-00 | s | METAL 1K 1% 1/6W |
| R26 | 1-215-385-00 | s | METAL 33 1% 1/6W |
| R27 | 1-215-405-00 | s | METAL 220 1% 1/6W |
| R28 | 1-215-405-00 | s | METAL 220 1% 1/6W |
| R29 | 1-215-433-00 | s | METAL 3.3K 1% 1/6W |
| R30 | 1-215-390-00 | s | METAL 51 1% 1/6W |
| R31 | 1-215-431-00 | s | METAL 2.7K 1% 1/6W |
| R32 | 1-215-405-00 | s | METAL 220 1% 1/6W |
| R33 | 1-215-405-00 | s | METAL 220 1% 1/6W |
| R34 | 1-215-431-00 | s | METAL 2.7K 1% 1/6W |
| R35 | 1-215-386-00 | s | METAL 36 1% 1/6W |
| R36 | 1-215-430-00 | s | METAL 2.4K 1% 1/6W |
| R37 | 1-215-480-00 | s | METAL 300K 1% 1/6W |

(AP-22 BOARD)

| Ref. No. or Q'ty | Part No. | SP | Description |
|---|---|---|---|
| R38 | 1-215-461-00 | s | METAL 47K 1% 1/6W |
| R39 | 1-215-464-00 | s | METAL 62K 1% 1/6W |
| R40 | 1-215-461-00 | s | METAL 47K 1% 1/6W |
| R41 | 1-215-464-00 | s | METAL 62K 1% 1/6W |
| R42 | 1-215-480-00 | s | METAL 300K 1% 1/6W |
| R43 | 1-215-430-00 | s | METAL 2.4K 1% 1/6W |
| R44 | 1-215-421-00 | s | METAL 1K 1% 1/6W |
| R45 | 1-215-421-00 | s | METAL 1K 1% 1/6W |
| R46 | 1-215-421-00 | s | METAL 1K 1% 1/6W |
| R47 | 1-215-421-00 | s | METAL 1K 1% 1/6W |
| R48 | 1-215-433-00 | s | METAL 3.3K 1% 1/6W |
| R49 | 1-215-405-00 | s | METAL 220 1% 1/6W |
| R50 | 1-215-405-00 | s | METAL 220 1% 1/6W |
| R51 | 1-215-430-00 | s | METAL 2.4K 1% 1/6W |
| R52 | 1-215-480-00 | s | METAL 300K 1% 1/6W |
| R53 | 1-215-432-00 | s | METAL 3K 1% 1/6W |
| R54 | 1-215-464-00 | s | METAL 62K 1% 1/6W |
| R55 | 1-215-421-00 | s | METAL 1K 1% 1/6W |
| R56 | 1-215-464-00 | s | METAL 62K 1% 1/6W |
| R57 | 1-215-480-00 | s | METAL 300K 1% 1/6W |
| R58 | 1-215-430-00 | s | METAL 2.4K 1% 1/6W |
| R59 | 1-215-421-00 | s | METAL 1K 1% 1/6W |
| R60 | 1-215-385-00 | s | METAL 33 1% 1/6W |
| R61 | 1-215-421-00 | s | METAL 1K 1% 1/6W |
| R62 | 1-215-426-00 | s | METAL 1.6K 1% 1/6W |
| R63 | 1-215-449-00 | s | METAL 15K 1% 1/6W |
| R65 | 1-215-432-00 | s | METAL 3K 1% 1/6W |
| R66 | 1-215-405-00 | s | METAL 220 1% 1/6W |
| R67 | 1-215-394-00 | s | METAL 75 1% 1/6W |
| R68 | 1-215-405-00 | s | METAL 220 1% 1/6W |
| R69 | 1-215-431-00 | s | METAL 2.7K 1% 1/6W |
| R70 | 1-215-452-00 | s | METAL 20K 1% 1/6W |
| R71 | 1-215-385-00 | s | METAL 33 1% 1/6W |
| R72 | 1-215-433-00 | s | METAL 3.3K 1% 1/6W |
| R73 | 1-215-405-00 | s | METAL 220 1% 1/6W |
| R74 | 1-215-404-00 | s | METAL 200 1% 1/6W |
| R75 | 1-215-456-00 | s | METAL 30K 1% 1/6W |
| R76 | 1-215-424-00 | s | METAL 1.3K 1% 1/6W |
| R77 | 1-215-424-00 | s | METAL 1.3K 1% 1/6W |
| R78 | 1-215-445-00 | s | METAL 10K 1% 1/6W |
| R79 | 1-215-424-00 | s | METAL 1.3K 1% 1/6W |
| R80 | 1-215-414-00 | s | METAL 510 1% 1/6W |
| R81 | 1-215-414-00 | s | METAL 510 1% 1/6W |
| R82 | 1-215-461-00 | s | METAL 47K 1% 1/6W |
| R83 | 1-215-445-00 | s | METAL 10K 1% 1/6W |
| R84 | 1-215-421-00 | s | METAL 1K 1% 1/6W |
| R85 | 1-215-421-00 | s | METAL 1K 1% 1/6W |
| R86 | 1-215-461-00 | s | METAL 47K 1% 1/6W |
| R87 | 1-215-397-00 | s | METAL 100 1% 1/6W |
| R88 | 1-215-433-00 | s | METAL 3.3K 1% 1/6W |
| R89 | 1-215-397-00 | s | METAL 100 1% 1/6W |
| R90 | 1-215-433-00 | s | METAL 3.3K 1% 1/6W |
| R91 | 1-215-445-00 | s | METAL 10K 1% 1/6W |
| R92 | 1-215-421-00 | s | METAL 1K 1% 1/6W |
| R93 | 1-215-421-00 | s | METAL 1K 1% 1/6W |
| R94 | 1-215-397-00 | s | METAL 100 1% 1/6W |
| R95 | 1-215-433-00 | s | METAL 3.3K 1% 1/6W |
| R96 | 1-215-397-00 | s | METAL 100 1% 1/6W |
| R97 | 1-215-433-00 | s | METAL 3.3K 1% 1/6W |

(AP-22 BOARD)

| Ref. No. or Q'ty | Part No. | SP | Description |
|---|---|---|---|
| R98 | 1-215-433-00 | s | METAL 3.3K 1% 1/6W |
| R99 | 1-215-445-00 | s | METAL 10K 1% 1/6W |
| R100 | 1-249-381-11 | s | CARBON 1 5% 1/4W |
| R101 | 1-215-397-00 | s | METAL 100 1% 1/6W |
| R102 | 1-215-432-00 | s | METAL 3K 1% 1/6W |
| R103 | 1-215-405-00 | s | METAL 220 1% 1/6W |
| R104 | 1-215-405-00 | s | METAL 220 1% 1/6W |
| R105 | 1-215-420-00 | s | METAL 910 1% 1/6W |
| R106 | 1-215-421-00 | s | METAL 1K 1% 1/6W |
| R107 | 1-215-400-00 | s | METAL 130 1% 1/6W |
| R108 | 1-215-405-00 | s | METAL 220 1% 1/6W |
| R109 | 1-215-405-00 | s | METAL 220 1% 1/6W |
| R110 | 1-215-432-00 | s | METAL 3K 1% 1/6W |
| R111 | 1-215-403-00 | s | METAL 180 1% 1/6W |
| R112 | 1-215-397-00 | s | METAL 100 1% 1/6W |
| R113 | 1-215-409-00 | s | METAL 330 1% 1/6W |
| R114 | 1-215-405-00 | s | METAL 220 1% 1/6W |
| R121 | 1-215-397-00 | s | METAL 100 1% 1/6W |
| R122 | 1-215-432-00 | s | METAL 3K 1% 1/6W |
| R123 | 1-215-405-00 | s | METAL 220 1% 1/6W |
| R124 | 1-215-405-00 | s | METAL 220 1% 1/6W |
| R125 | 1-215-420-00 | s | METAL 910 1% 1/6W |
| R126 | 1-215-421-00 | s | METAL 1K 1% 1/6W |
| R127 | 1-215-400-00 | s | METAL 130 1% 1/6W |
| R128 | 1-215-405-00 | s | METAL 220 1% 1/6W |
| R129 | 1-215-405-00 | s | METAL 220 1% 1/6W |
| R130 | 1-215-432-00 | s | METAL 3K 1% 1/6W |
| R131 | 1-215-403-00 | s | METAL 180 1% 1/6W |
| R132 | 1-215-397-00 | s | METAL 100 1% 1/6W |
| R133 | 1-215-409-00 | s | METAL 330 1% 1/6W |
| R141 | 1-215-397-00 | s | METAL 100 1% 1/6W |
| R142 | 1-215-432-00 | s | METAL 3K 1% 1/6W |
| R143 | 1-215-405-00 | s | METAL 220 1% 1/6W |
| R144 | 1-215-405-00 | s | METAL 220 1% 1/6W |
| R145 | 1-215-420-00 | s | METAL 910 1% 1/6W |
| R146 | 1-215-421-00 | s | METAL 1K 1% 1/6W |
| R147 | 1-215-400-00 | s | METAL 130 1% 1/6W |
| R148 | 1-215-405-00 | s | METAL 220 1% 1/6W |
| R149 | 1-215-405-00 | s | METAL 220 1% 1/6W |
| R150 | 1-215-432-00 | s | METAL 3K 1% 1/6W |
| R151 | 1-215-403-00 | s | METAL 180 1% 1/6W |
| R152 | 1-215-397-00 | s | METAL 100 1% 1/6W |
| R153 | 1-215-409-00 | s | METAL 330 1% 1/6W |
| R161 | 1-215-397-00 | s | METAL 100 1% 1/6W |
| R162 | 1-215-432-00 | s | METAL 3K 1% 1/6W |
| R163 | 1-215-405-00 | s | METAL 220 1% 1/6W |
| R164 | 1-215-405-00 | s | METAL 220 1% 1/6W |
| R165 | 1-215-420-00 | s | METAL 910 1% 1/6W |
| R166 | 1-215-421-00 | s | METAL 1K 1% 1/6W |
| R167 | 1-215-400-00 | s | METAL 130 1% 1/6W |
| R168 | 1-215-405-00 | s | METAL 220 1% 1/6W |
| R169 | 1-215-405-00 | s | METAL 220 1% 1/6W |
| R170 | 1-215-432-00 | s | METAL 3K 1% 1/6W |
| R171 | 1-215-403-00 | s | METAL 180 1% 1/6W |
| R172 | 1-215-397-00 | s | METAL 100 1% 1/6W |
| R173 | 1-215-409-00 | s | METAL 330 1% 1/6W |
| R181 | 1-215-397-00 | s | METAL 100 1% 1/6W |
| R182 | 1-215-432-00 | s | METAL 3K 1% 1/6W |
| R183 | 1-215-405-00 | s | METAL 220 1% 1/6W |

(AP-22 BOARD)

| Ref. No. or Q'ty | Part No. | SP | Description |
|---|---|---|---|
| R184 | 1-215-405-00 | s | METAL 220 1% 1/6W |
| R185 | 1-215-420-00 | s | METAL 910 1% 1/6W |
| R186 | 1-215-421-00 | s | METAL 1K 1% 1/6W |
| R187 | 1-215-400-00 | s | METAL 130 1% 1/6W |
| R188 | 1-215-405-00 | s | METAL 220 1% 1/6W |
| R189 | 1-215-405-00 | s | METAL 220 1% 1/6W |
| R190 | 1-215-432-00 | s | METAL 3K 1% 1/6W |
| R191 | 1-215-403-00 | s | METAL 180 1% 1/6W |
| R192 | 1-215-397-00 | s | METAL 100 1% 1/6W |
| R193 | 1-215-409-00 | s | METAL 330 1% 1/6W |
| R201 | 1-215-397-00 | s | METAL 100 1% 1/6W |
| R202 | 1-215-432-00 | s | METAL 3K 1% 1/6W |
| R203 | 1-215-405-00 | s | METAL 220 1% 1/6W |
| R204 | 1-215-405-00 | s | METAL 220 1% 1/6W |
| R205 | 1-215-420-00 | s | METAL 910 1% 1/6W |
| R206 | 1-215-421-00 | s | METAL 1K 1% 1/6W |
| R207 | 1-215-400-00 | s | METAL 130 1% 1/6W |
| R208 | 1-215-405-00 | s | METAL 220 1% 1/6W |
| R209 | 1-215-405-00 | s | METAL 220 1% 1/6W |
| R210 | 1-215-432-00 | s | METAL 3K 1% 1/6W |
| R211 | 1-215-403-00 | s | METAL 180 1% 1/6W |
| R212 | 1-215-397-00 | s | METAL 100 1% 1/6W |
| R213 | 1-215-409-00 | s | METAL 330 1% 1/6W |
| R221 | 1-215-397-00 | s | METAL 100 1% 1/6W |
| R222 | 1-215-432-00 | s | METAL 3K 1% 1/6W |
| R223 | 1-215-405-00 | s | METAL 220 1% 1/6W |
| R224 | 1-215-405-00 | s | METAL 220 1% 1/6W |
| R225 | 1-215-420-00 | s | METAL 910 1% 1/6W |
| R226 | 1-215-421-00 | s | METAL 1K 1% 1/6W |
| R227 | 1-215-400-00 | s | METAL 130 1% 1/6W |
| R228 | 1-215-405-00 | s | METAL 220 1% 1/6W |
| R229 | 1-215-405-00 | s | METAL 220 1% 1/6W |
| R230 | 1-215-432-00 | s | METAL 3K 1% 1/6W |
| R231 | 1-215-403-00 | s | METAL 180 1% 1/6W |
| R232 | 1-215-397-00 | s | METAL 100 1% 1/6W |
| R233 | 1-215-409-00 | s | METAL 330 1% 1/6W |
| R241 | 1-215-397-00 | s | METAL 100 1% 1/6W |
| R242 | 1-215-432-00 | s | METAL 3K 1% 1/6W |
| R243 | 1-215-405-00 | s | METAL 220 1% 1/6W |
| R244 | 1-215-405-00 | s | METAL 220 1% 1/6W |
| R245 | 1-215-420-00 | s | METAL 910 1% 1/6W |
| R246 | 1-215-421-00 | s | METAL 1K 1% 1/6W |
| R247 | 1-215-400-00 | s | METAL 130 1% 1/6W |
| R248 | 1-215-405-00 | s | METAL 220 1% 1/6W |
| R249 | 1-215-405-00 | s | METAL 220 1% 1/6W |
| R250 | 1-215-432-00 | s | METAL 3K 1% 1/6W |
| R251 | 1-215-403-00 | s | METAL 180 1% 1/6W |
| R252 | 1-215-397-00 | s | METAL 100 1% 1/6W |
| R253 | 1-215-409-00 | s | METAL 330 1% 1/6W |
| R261 | 1-215-397-00 | s | METAL 100 1% 1/6W |
| R262 | 1-215-432-00 | s | METAL 3K 1% 1/6W |
| R263 | 1-215-405-00 | s | METAL 220 1% 1/6W |
| R264 | 1-215-405-00 | s | METAL 220 1% 1/6W |
| R265 | 1-215-420-00 | s | METAL 910 1% 1/6W |
| R266 | 1-215-421-00 | s | METAL 1K 1% 1/6W |
| R267 | 1-215-400-00 | s | METAL 130 1% 1/6W |
| R268 | 1-215-405-00 | s | METAL 220 1% 1/6W |
| R269 | 1-215-405-00 | s | METAL 220 1% 1/6W |
| R270 | 1-215-432-00 | s | METAL 3K 1% 1/6W |

(AP-22 BOARD)

| Ref. No. or Q'ty | Part No. | SP | Description |
|---|---|---|---|
| R271 | 1-215-403-00 | s | METAL 180 1% 1/6W |
| R272 | 1-215-397-00 | s | METAL 100 1% 1/6W |
| R273 | 1-215-409-00 | s | METAL 330 1% 1/6W |
| R281 | 1-215-397-00 | s | METAL 100 1% 1/6W |
| R282 | 1-215-432-00 | s | METAL 3K 1% 1/6W |
| R283 | 1-215-405-00 | s | METAL 220 1% 1/6W |
| R284 | 1-215-405-00 | s | METAL 220 1% 1/6W |
| R285 | 1-215-420-00 | s | METAL 910 1% 1/6W |
| R286 | 1-215-421-00 | s | METAL 1K 1% 1/6W |
| R287 | 1-215-400-00 | s | METAL 130 1% 1/6W |
| R288 | 1-215-405-00 | s | METAL 220 1% 1/6W |
| R289 | 1-215-405-00 | s | METAL 220 1% 1/6W |
| R290 | 1-215-432-00 | s | METAL 3K 1% 1/6W |
| R291 | 1-215-403-00 | s | METAL 180 1% 1/6W |
| R292 | 1-215-397-00 | s | METAL 100 1% 1/6W |
| R293 | 1-215-409-00 | s | METAL 330 1% 1/6W |
| R301 | 1-215-397-00 | s | METAL 100 1% 1/6W |
| R302 | 1-215-432-00 | s | METAL 3K 1% 1/6W |
| R303 | 1-215-405-00 | s | METAL 220 1% 1/6W |
| R304 | 1-215-405-00 | s | METAL 220 1% 1/6W |
| R305 | 1-215-420-00 | s | METAL 910 1% 1/6W |
| R306 | 1-215-421-00 | s | METAL 1K 1% 1/6W |
| R307 | 1-215-400-00 | s | METAL 130 1% 1/6W |
| R308 | 1-215-405-00 | s | METAL 220 1% 1/6W |
| R309 | 1-215-405-00 | s | METAL 220 1% 1/6W |
| R310 | 1-215-432-00 | s | METAL 3K 1% 1/6W |
| R311 | 1-215-403-00 | s | METAL 180 1% 1/6W |
| R312 | 1-215-397-00 | s | METAL 100 1% 1/6W |
| R313 | 1-215-409-00 | s | METAL 330 1% 1/6W |
| R321 | 1-215-397-00 | s | METAL 100 1% 1/6W |
| R322 | 1-215-432-00 | s | METAL 3K 1% 1/6W |
| R323 | 1-215-405-00 | s | METAL 220 1% 1/6W |
| R324 | 1-215-405-00 | s | METAL 220 1% 1/6W |
| R325 | 1-215-420-00 | s | METAL 910 1% 1/6W |
| R326 | 1-215-421-00 | s | METAL 1K 1% 1/6W |
| R327 | 1-215-400-00 | s | METAL 130 1% 1/6W |
| R328 | 1-215-405-00 | s | METAL 220 1% 1/6W |
| R329 | 1-215-405-00 | s | METAL 220 1% 1/6W |
| R330 | 1-215-432-00 | s | METAL 3K 1% 1/6W |
| R331 | 1-215-403-00 | s | METAL 180 1% 1/6W |
| R332 | 1-215-397-00 | s | METAL 100 1% 1/6W |
| R333 | 1-215-409-00 | s | METAL 330 1% 1/6W |
| R341 | 1-215-397-00 | s | METAL 100 1% 1/6W |
| R342 | 1-215-432-00 | s | METAL 3K 1% 1/6W |
| R343 | 1-215-405-00 | s | METAL 220 1% 1/6W |
| R344 | 1-215-405-00 | s | METAL 220 1% 1/6W |
| R345 | 1-215-420-00 | s | METAL 910 1% 1/6W |
| R346 | 1-215-421-00 | s | METAL 1K 1% 1/6W |
| R347 | 1-215-400-00 | s | METAL 130 1% 1/6W |
| R348 | 1-215-405-00 | s | METAL 220 1% 1/6W |
| R349 | 1-215-405-00 | s | METAL 220 1% 1/6W |
| R350 | 1-215-432-00 | s | METAL 3K 1% 1/6W |
| R351 | 1-215-403-00 | s | METAL 180 1% 1/6W |
| R352 | 1-215-397-00 | s | METAL 100 1% 1/6W |
| R353 | 1-215-409-00 | s | METAL 330 1% 1/6W |
| R361 | 1-215-397-00 | s | METAL 100 1% 1/6W |
| R362 | 1-215-432-00 | s | METAL 3K 1% 1/6W |
| R363 | 1-215-405-00 | s | METAL 220 1% 1/6W |
| R364 | 1-215-405-00 | s | METAL 220 1% 1/6W |

(AP-22 BOARD)

| Ref. No. or Q'ty | Part No. | SP | Description |
|---|---|---|---|
| R365 | 1-215-420-00 | s | METAL 910 1% 1/6W |
| R366 | 1-215-421-00 | s | METAL 1K 1% 1/6W |
| R367 | 1-215-400-00 | s | METAL 130 1% 1/6W |
| R368 | 1-215-405-00 | s | METAL 220 1% 1/6W |
| R369 | 1-215-405-00 | s | METAL 220 1% 1/6W |
| R370 | 1-215-432-00 | s | METAL 3K 1% 1/6W |
| R371 | 1-215-403-00 | s | METAL 180 1% 1/6W |
| R372 | 1-215-397-00 | s | METAL 100 1% 1/6W |
| R373 | 1-215-409-00 | s | METAL 330 1% 1/6W |
| R381 | 1-215-397-00 | s | METAL 100 1% 1/6W |
| R382 | 1-215-432-00 | s | METAL 3K 1% 1/6W |
| R383 | 1-215-405-00 | s | METAL 220 1% 1/6W |
| R384 | 1-215-405-00 | s | METAL 220 1% 1/6W |
| R385 | 1-215-420-00 | s | METAL 910 1% 1/6W |
| R386 | 1-215-421-00 | s | METAL 1K 1% 1/6W |
| R387 | 1-215-400-00 | s | METAL 130 1% 1/6W |
| R388 | 1-215-405-00 | s | METAL 220 1% 1/6W |
| R389 | 1-215-405-00 | s | METAL 220 1% 1/6W |
| R390 | 1-215-432-00 | s | METAL 3K 1% 1/6W |
| R391 | 1-215-403-00 | s | METAL 180 1% 1/6W |
| R392 | 1-215-397-00 | s | METAL 100 1% 1/6W |
| R393 | 1-215-409-00 | s | METAL 330 1% 1/6W |
| R401 | 1-215-397-00 | s | METAL 100 1% 1/6W |
| R402 | 1-215-432-00 | s | METAL 3K 1% 1/6W |
| R403 | 1-215-405-00 | s | METAL 220 1% 1/6W |
| R404 | 1-215-405-00 | s | METAL 220 1% 1/6W |
| R405 | 1-215-420-00 | s | METAL 910 1% 1/6W |
| R406 | 1-215-421-00 | s | METAL 1K 1% 1/6W |
| R407 | 1-215-400-00 | s | METAL 130 1% 1/6W |
| R408 | 1-215-405-00 | s | METAL 220 1% 1/6W |
| R409 | 1-215-405-00 | s | METAL 220 1% 1/6W |
| R410 | 1-215-432-00 | s | METAL 3K 1% 1/6W |
| R411 | 1-215-403-00 | s | METAL 180 1% 1/6W |
| R412 | 1-215-397-00 | s | METAL 100 1% 1/6W |
| R413 | 1-215-409-00 | s | METAL 330 1% 1/6W |
| R421 | 1-215-421-00 | s | METAL 1K 1% 1/6W |
| R422 | 1-215-421-00 | s | METAL 1K 1% 1/6W |
| R423 | 1-215-483-00 | s | METAL 390K 1% 1/6W |
| R424 | 1-215-445-00 | s | METAL 10K 1% 1/6W |
| R425 | 1-215-442-00 | s | METAL 7.5K 1% 1/6W |
| R426 | 1-215-471-00 | s | METAL 120K 1% 1/6W |
| R441 | 1-215-421-00 | s | METAL 1K 1% 1/6W |
| R442 | 1-215-421-00 | s | METAL 1K 1% 1/6W |
| R443 | 1-215-483-00 | s | METAL 390K 1% 1/6W |
| R444 | 1-215-445-00 | s | METAL 10K 1% 1/6W |
| R445 | 1-215-442-00 | s | METAL 7.5K 1% 1/6W |
| R446 | 1-215-471-00 | s | METAL 120K 1% 1/6W |
| R461 | 1-215-421-00 | s | METAL 1K 1% 1/6W |
| R462 | 1-215-421-00 | s | METAL 1K 1% 1/6W |
| R463 | 1-215-483-00 | s | METAL 390K 1% 1/6W |
| R464 | 1-215-445-00 | s | METAL 10K 1% 1/6W |
| R465 | 1-215-442-00 | s | METAL 7.5K 1% 1/6W |
| R466 | 1-215-471-00 | s | METAL 120K 1% 1/6W |
| R481 | 1-215-383-00 | s | METAL 27 1% 1/6W |
| R482 | 1-215-383-00 | s | METAL 27 1% 1/6W |
| R483 | 1-215-385-00 | s | METAL 33 1% 1/6W |
| R484 | 1-215-385-00 | s | METAL 33 1% 1/6W |
| R501 | 1-215-385-00 | s | METAL 33 1% 1/6W |
| R502 | 1-215-385-00 | s | METAL 33 1% 1/6W |

(AP-22 BOARD)

| Ref. No. or Q'ty | Part No. | SP | Description |
|---|---|---|---|
| R503 | 1-215-385-00 | s | METAL 33 1% 1/6W |
| R504 | 1-215-385-00 | s | METAL 33 1% 1/6W |
| R521 | 1-215-386-00 | s | METAL 36 1% 1/6W |
| R522 | 1-215-386-00 | s | METAL 36 1% 1/6W |
| R523 | 1-215-386-00 | s | METAL 36 1% 1/6W |
| R524 | 1-215-386-00 | s | METAL 36 1% 1/6W |
| R541 | 1-215-386-00 | s | METAL 36 1% 1/6W |
| R542 | 1-215-386-00 | s | METAL 36 1% 1/6W |
| R543 | 1-215-386-00 | s | METAL 36 1% 1/6W |
| R544 | 1-215-386-00 | s | METAL 36 1% 1/6W |
| R561 | 1-215-386-00 | s | METAL 36 1% 1/6W |
| R562 | 1-215-386-00 | s | METAL 36 1% 1/6W |
| R563 | 1-215-386-00 | s | METAL 36 1% 1/6W |
| R564 | 1-215-386-00 | s | METAL 36 1% 1/6W |
| R581 | 1-215-386-00 | s | METAL 36 1% 1/6W |
| R582 | 1-215-386-00 | s | METAL 36 1% 1/6W |
| R583 | 1-215-386-00 | s | METAL 36 1% 1/6W |
| R584 | 1-215-386-00 | s | METAL 36 1% 1/6W |
| R601 | 1-249-381-11 | s | CARBON 1 5% 1/4W |
| R602 | 1-215-423-00 | s | METAL 1.2K 1% 1/6W |
| R603 | 1-215-440-00 | s | METAL 6.2K 1% 1/6W |
| R604 | 1-215-440-00 | s | METAL 6.2K 1% 1/6W |
| R605 | 1-215-413-00 | s | METAL 470 1% 1/6W |
| R606 | 1-247-727-11 | s | CARBON 10 5% 1/2W |
| R607 | 1-247-727-11 | s | CARBON 10 5% 1/2W |
| R608 | 1-215-401-11 | s | METAL 150 1% 1/6W |
| R609 | 1-215-401-11 | s | METAL 150 1% 1/6W |
| R610 | 1-249-381-11 | s | CARBON 1 5% 1/4W |
| R611 | 1-249-381-11 | s | CARBON 1 5% 1/4W |
| R612 | 1-215-472-00 | s | METAL 130K 1% 1/6W |
| R613 | 1-215-452-00 | s | METAL 20K 1% 1/6W |
| R614 | 1-215-438-00 | s | METAL 5.1K 1% 1/6W |
| R615 | 1-215-452-00 | s | METAL 20K 1% 1/6W |
| R616 | 1-215-450-00 | s | METAL 16K 1% 1/6W |
| R617 | 1-215-464-00 | s | METAL 62K 1% 1/6W |
| R618 | 1-215-433-00 | s | METAL 3.3K 1% 1/6W |
| R619 | 1-215-433-00 | s | METAL 3.3K 1% 1/6W |
| R620 | 1-215-433-00 | s | METAL 3.3K 1% 1/6W |
| R621 | 1-215-433-00 | s | METAL 3.3K 1% 1/6W |
| R622 | 1-215-433-00 | s | METAL 3.3K 1% 1/6W |
| R623 | 1-215-433-00 | s | METAL 3.3K 1% 1/6W |
| R624 | 1-215-433-00 | s | METAL 3.3K 1% 1/6W |
| R625 | 1-215-461-00 | s | METAL 47K 1% 1/6W |
| R626 | 1-215-405-00 | s | METAL 220 1% 1/6W |
| R627 | 1-215-405-00 | s | METAL 220 1% 1/6W |
| R628 | 1-215-459-00 | s | METAL 39K 1% 1/6W |
| R630 | 1-215-433-00 | s | METAL 3.3K 1% 1/6W |
| R631 | 1-215-433-00 | s | METAL 3.3K 1% 1/6W |
| R633 | 1-215-467-00 | s | METAL 82K 1% 1/6W |
| R634 | 1-215-397-00 | s | METAL 100 1% 1/6W |
| R635 | 1-215-438-00 | s | METAL 5.1K 1% 1/6W |
| R636 | 1-215-397-00 | s | METAL 100 1% 1/6W |
| RB1 | 1-231-410-00 | s | RESISTOR BLOCK 10Kx8 |
| RV1 | 1-237-517-21 | s | RES, ADJ, METAL 5K |
| RV2 | 1-237-517-21 | s | RES, ADJ, METAL 5K |
| RV3 | 1-237-517-21 | s | RES, ADJ, METAL 5K |
| RV4 | 1-237-517-21 | s | RES, ADJ, METAL 5K |
| RV5 | 1-237-517-21 | s | RES, ADJ, METAL 5K |

## (AP-22 BOARD)

| Ref. No.<br>or Q'ty | Part No. | SP | Description |
|---|---|---|---|
| RV6 | 1-237-517-21 | s | RES, ADJ, METAL 5K |
| RV7 | 1-237-517-21 | s | RES, ADJ, METAL 5K |
| RV8 | 1-224-935-00 | s | RES, ADJ, METAL FILM 200 |
| RV9 | 1-237-519-21 | s | RES, ADJ, METAL 20K |
| RV421 | 1-237-515-21 | s | RES, ADJ, METAL 1K |
| RV441 | 1-237-515-21 | s | RES, ADJ, METAL 1K |
| RV461 | 1-237-515-21 | s | RES, ADJ, METAL 1K |
| T1 | 1-437-163-12 | s | TRANSFORMER, DIGITAL |
| T2 | 1-437-163-12 | s | TRANSFORMER, DIGITAL |
| T3 | 1-437-163-21 | s | TRANSFORMER, DIGITAL |
| T4 | 1-437-163-21 | s | TRANSFORMER, DIGITAL |
| T5 | 1-437-163-21 | s | TRANSFORMER, DIGITAL |
| T6 | 1-433-196-00 | s | TRANSFORMER, BIAS |
| T101 | 1-437-163-12 | s | TRANSFORMER, DIGITAL |
| T121 | 1-437-163-12 | s | TRANSFORMER, DIGITAL |
| T141 | 1-437-163-12 | s | TRANSFORMER, DIGITAL |
| T161 | 1-437-163-12 | s | TRANSFORMER, DIGITAL |
| T181 | 1-437-163-12 | s | TRANSFORMER, DIGITAL |
| T201 | 1-437-163-12 | s | TRANSFORMER, DIGITAL |
| T221 | 1-437-163-12 | s | TRANSFORMER, DIGITAL |
| T241 | 1-437-163-12 | s | TRANSFORMER, DIGITAL |
| T261 | 1-437-163-12 | s | TRANSFORMER, DIGITAL |
| T281 | 1-437-163-12 | s | TRANSFORMER, DIGITAL |
| T301 | 1-437-163-12 | s | TRANSFORMER, DIGITAL |
| T321 | 1-437-163-12 | s | TRANSFORMER, DIGITAL |
| T341 | 1-437-163-12 | s | TRANSFORMER, DIGITAL |
| T361 | 1-437-163-12 | s | TRANSFORMER, DIGITAL |
| T381 | 1-437-163-12 | s | TRANSFORMER, DIGITAL |
| T401 | 1-437-163-12 | s | TRANSFORMER, DIGITAL |

## AU-109 BOARD

| Ref. No.<br>or Q'ty | Part No. | SP | Description |
|---|---|---|---|
| 1pc | A-6013-096-A | o | MOUNTED CIRCUIT BOARD, AU-109 |
| 1pc | 1-107-042-00 | s | MICA 2.2PF 500V |
| 1pc | 1-107-046-00 | s | MICA 4.7PF 500V |
| 1pc | 1-107-158-00 | s | MICA 30PF 5% 500V |
| 1pc | 1-162-876-11 | s | CERAMIC 75PF 5% 50V |
| 1pc | 8-759-071-40 | s | IC AM27C256-100DC |
| 1pc | 8-759-725-22 | s | IC PALCE16V8Q-25PC |
| 8pcs | 7-622-207-05 | s | N 2.6, TYPE 2 |
| 8pcs | 7-628-254-40 | s | SCREW +PS 2.6X12 |
| 9pcs | 7-682-948-01 | s | SCREW +PSW 3X8 |
| C1 | 1-162-671-11 | s | CERAMIC 22PF 5% 50V |
| C2 | 1-162-671-11 | s | CERAMIC 22PF 5% 50V |
| C3 | 1-164-208-11 | s | CERAMIC 0.1uF 99% 50V |
| C4 | 1-162-667-11 | s | CERAMIC 10PF 5% 50V |
| C5 | 1-162-667-11 | s | CERAMIC 10PF 5% 50V |
| C6 | 1-126-630-11 | s | ELECT 82uF 20% 25V |
| C7 | 1-126-630-11 | s | ELECT 82uF 20% 25V |
| C11 | 1-164-208-11 | s | CERAMIC 0.1uF 99% 50V |
| C12 | 1-164-208-11 | s | CERAMIC 0.1uF 99% 50V |
| C13 | 1-164-208-11 | s | CERAMIC 0.1uF 99% 50V |
| C14 | 1-164-208-11 | s | CERAMIC 0.1uF 99% 50V |
| C15 | 1-164-208-11 | s | CERAMIC 0.1uF 99% 50V |
| C16 | 1-164-208-11 | s | CERAMIC 0.1uF 99% 50V |
| C17 | 1-164-208-11 | s | CERAMIC 0.1uF 99% 50V |
| C18 | 1-164-208-11 | s | CERAMIC 0.1uF 99% 50V |
| C19 | 1-164-208-11 | s | CERAMIC 0.1uF 99% 50V |
| C20 | 1-164-208-11 | s | CERAMIC 0.1uF 99% 50V |
| C21 | 1-164-208-11 | s | CERAMIC 0.1uF 99% 50V |
| C22 | 1-164-208-11 | s | CERAMIC 0.1uF 99% 50V |
| C23 | 1-164-208-11 | s | CERAMIC 0.1uF 99% 50V |
| C24 | 1-164-208-11 | s | CERAMIC 0.1uF 99% 50V |
| C25 | 1-164-208-11 | s | CERAMIC 0.1uF 99% 50V |
| C26 | 1-164-208-11 | s | CERAMIC 0.1uF 99% 50V |
| C27 | 1-164-208-11 | s | CERAMIC 0.1uF 99% 50V |
| C28 | 1-164-208-11 | s | CERAMIC 0.1uF 99% 50V |
| C29 | 1-164-208-11 | s | CERAMIC 0.1uF 99% 50V |
| C30 | 1-164-208-11 | s | CERAMIC 0.1uF 99% 50V |
| C31 | 1-164-208-11 | s | CERAMIC 0.1uF 99% 50V |
| C32 | 1-164-208-11 | s | CERAMIC 0.1uF 99% 50V |
| C33 | 1-164-208-11 | s | CERAMIC 0.1uF 99% 50V |
| C34 | 1-164-208-11 | s | CERAMIC 0.1uF 99% 50V |
| C35 | 1-164-208-11 | s | CERAMIC 0.1uF 99% 50V |
| C36 | 1-164-208-11 | s | CERAMIC 0.1uF 99% 50V |
| C37 | 1-164-208-11 | s | CERAMIC 0.1uF 99% 50V |
| C38 | 1-164-208-11 | s | CERAMIC 0.1uF 99% 50V |
| C39 | 1-164-208-11 | s | CERAMIC 0.1uF 99% 50V |
| C40 | 1-164-208-11 | s | CERAMIC 0.1uF 99% 50V |
| C41 | 1-164-208-11 | s | CERAMIC 0.1uF 99% 50V |
| C101 | 1-162-871-11 | s | CERAMIC 47PF 5% 50V |
| C102 | 1-164-119-11 | s | CERAMIC 110PF 5% 50V |
| C103 | 1-162-873-11 | s | CERAMIC 56PF 5% 50V |
| C104 | 1-162-876-11 | s | CERAMIC 75PF 5% 50V |
| C105 | 1-164-119-11 | s | CERAMIC 110PF 5% 50V |
| C106 | 1-162-873-11 | s | CERAMIC 56PF 5% 50V |
| C107 | 1-162-876-11 | s | CERAMIC 75PF 5% 50V |
| C108 | 1-162-669-11 | s | CERAMIC 15PF 5% 50V |
| C109 | 1-161-900-11 | s | CERAMIC 1uF 50V |
| C110 | 1-162-871-11 | s | CERAMIC 47PF 5% 50V |
| C111 | 1-164-119-11 | s | CERAMIC 110PF 5% 50V |

| Ref. No. or Q'ty | Part No. | SP | Description |
|---|---|---|---|
| C112 | 1-162-873-11 | s | CERAMIC 56PF 5% 50V |
| C113 | 1-162-876-11 | s | CERAMIC 75PF 5% 50V |
| C114 | 1-164-119-11 | s | CERAMIC 110PF 5% 50V |
| C115 | 1-162-873-11 | s | CERAMIC 56PF 5% 50V |
| C116 | 1-162-876-11 | s | CERAMIC 75PF 5% 50V |
| C117 | 1-162-669-11 | s | CERAMIC 15PF 5% 50V |
| C118 | 1-161-900-11 | s | CERAMIC 1uF 50V |
| C119 | 1-164-120-11 | s | CERAMIC 130PF 5% 50V |
| C120 | 1-164-120-11 | s | CERAMIC 130PF 5% 50V |
| C121 | 1-164-208-11 | s | CERAMIC 0.1uF 99% 50V |
| C122 | 1-164-208-11 | s | CERAMIC 0.1uF 99% 50V |
| C123 | 1-131-368-00 | s | TANTALUM 3.3uF 10% 16V |
| C124 | 1-131-368-00 | s | TANTALUM 3.3uF 10% 16V |
| C125 | 1-162-708-11 | s | CERAMIC 82PF 1% 50V |
| C126 | 1-162-667-11 | s | CERAMIC 10PF 5% 50V |
| C127 | 1-164-208-11 | s | CERAMIC 0.1uF 99% 50V |
| C128 | 1-124-596-11 | s | ELECT 27uF 20% 16V |
| C129 | 1-124-596-11 | s | ELECT 27uF 20% 16V |
| C130 | 1-164-208-11 | s | CERAMIC 0.1uF 99% 50V |
| C131 | 1-164-208-11 | s | CERAMIC 0.1uF 99% 50V |
| C132 | 1-124-638-11 | s | ELECT 22uF 20% 10V |
| C133 | 1-124-638-11 | s | ELECT 22uF 20% 10V |
| C141 | 1-164-208-11 | s | CERAMIC 0.1uF 99% 50V |
| C142 | 1-164-208-11 | s | CERAMIC 0.1uF 99% 50V |
| C143 | 1-164-208-11 | s | CERAMIC 0.1uF 99% 50V |
| C144 | 1-164-208-11 | s | CERAMIC 0.1uF 99% 50V |
| C145 | 1-164-208-11 | s | CERAMIC 0.1uF 99% 50V |
| C146 | 1-164-208-11 | s | CERAMIC 0.1uF 99% 50V |
| C147 | 1-164-208-11 | s | CERAMIC 0.1uF 99% 50V |
| C148 | 1-164-208-11 | s | CERAMIC 0.1uF 99% 50V |
| C149 | 1-164-208-11 | s | CERAMIC 0.1uF 99% 50V |
| C150 | 1-164-208-11 | s | CERAMIC 0.1uF 99% 50V |
| C151 | 1-164-208-11 | s | CERAMIC 0.1uF 99% 50V |
| C152 | 1-164-208-11 | s | CERAMIC 0.1uF 99% 50V |
| C153 | 1-164-208-11 | s | CERAMIC 0.1uF 99% 50V |
| C154 | 1-164-208-11 | s | CERAMIC 0.1uF 99% 50V |
| C155 | 1-164-208-11 | s | CERAMIC 0.1uF 99% 50V |
| C156 | 1-164-208-11 | s | CERAMIC 0.1uF 99% 50V |
| C157 | 1-164-208-11 | s | CERAMIC 0.1uF 99% 50V |
| C201 | 1-162-871-11 | s | CERAMIC 47PF 5% 50V |
| C202 | 1-164-119-11 | s | CERAMIC 110PF 5% 50V |
| C203 | 1-162-873-11 | s | CERAMIC 56PF 5% 50V |
| C204 | 1-162-876-11 | s | CERAMIC 75PF 5% 50V |
| C205 | 1-164-119-11 | s | CERAMIC 110PF 5% 50V |
| C206 | 1-162-873-11 | s | CERAMIC 56PF 5% 50V |
| C207 | 1-162-876-11 | s | CERAMIC 75PF 5% 50V |
| C208 | 1-162-669-11 | s | CERAMIC 15PF 5% 50V |
| C209 | 1-161-900-11 | s | CERAMIC 1uF 50V |
| C210 | 1-162-871-11 | s | CERAMIC 47PF 5% 50V |
| C211 | 1-164-119-11 | s | CERAMIC 110PF 5% 50V |
| C212 | 1-162-873-11 | s | CERAMIC 56PF 5% 50V |
| C213 | 1-162-876-11 | s | CERAMIC 75PF 5% 50V |
| C214 | 1-164-119-11 | s | CERAMIC 110PF 5% 50V |
| C215 | 1-162-873-11 | s | CERAMIC 56PF 5% 50V |
| C216 | 1-162-876-11 | s | CERAMIC 75PF 5% 50V |
| C217 | 1-162-669-11 | s | CERAMIC 15PF 5% 50V |
| C218 | 1-161-900-11 | s | CERAMIC 1uF 50V |
| C219 | 1-164-120-11 | s | CERAMIC 130PF 5% 50V |
| C220 | 1-164-120-11 | s | CERAMIC 130PF 5% 50V |
| C221 | 1-164-208-11 | s | CERAMIC 0.1uF 99% 50V |
| C222 | 1-164-208-11 | s | CERAMIC 0.1uF 99% 50V |
| C223 | 1-131-368-00 | s | TANTALUM 3.3uF 10% 16V |
| C224 | 1-131-368-00 | s | TANTALUM 3.3uF 10% 16V |
| C225 | 1-162-708-11 | s | CERAMIC 82PF 1% 50V |
| C226 | 1-162-667-11 | s | CERAMIC 10PF 5% 50V |
| C227 | 1-164-208-11 | s | CERAMIC 0.1uF 99% 50V |
| C228 | 1-124-596-11 | s | ELECT 27uF 20% 16V |
| C229 | 1-124-596-11 | s | ELECT 27uF 20% 16V |
| C230 | 1-164-208-11 | s | CERAMIC 0.1uF 99% 50V |
| C231 | 1-164-208-11 | s | CERAMIC 0.1uF 99% 50V |
| C241 | 1-164-208-11 | s | CERAMIC 0.1uF 99% 50V |
| C242 | 1-164-208-11 | s | CERAMIC 0.1uF 99% 50V |
| C243 | 1-164-208-11 | s | CERAMIC 0.1uF 99% 50V |
| C244 | 1-164-208-11 | s | CERAMIC 0.1uF 99% 50V |
| C245 | 1-164-208-11 | s | CERAMIC 0.1uF 99% 50V |
| C246 | 1-164-208-11 | s | CERAMIC 0.1uF 99% 50V |
| C247 | 1-164-208-11 | s | CERAMIC 0.1uF 99% 50V |
| C248 | 1-164-208-11 | s | CERAMIC 0.1uF 99% 50V |
| C249 | 1-164-208-11 | s | CERAMIC 0.1uF 99% 50V |
| C250 | 1-164-208-11 | s | CERAMIC 0.1uF 99% 50V |
| C251 | 1-164-208-11 | s | CERAMIC 0.1uF 99% 50V |
| C252 | 1-164-208-11 | s | CERAMIC 0.1uF 99% 50V |
| C253 | 1-164-208-11 | s | CERAMIC 0.1uF 99% 50V |
| C254 | 1-164-208-11 | s | CERAMIC 0.1uF 99% 50V |
| C255 | 1-164-208-11 | s | CERAMIC 0.1uF 99% 50V |
| C256 | 1-164-208-11 | s | CERAMIC 0.1uF 99% 50V |
| C301 | 1-162-871-11 | s | CERAMIC 47PF 5% 50V |
| C302 | 1-164-119-11 | s | CERAMIC 110PF 5% 50V |
| C303 | 1-162-873-11 | s | CERAMIC 56PF 5% 50V |
| C304 | 1-162-876-11 | s | CERAMIC 75PF 5% 50V |
| C305 | 1-164-119-11 | s | CERAMIC 110PF 5% 50V |
| C306 | 1-162-873-11 | s | CERAMIC 56PF 5% 50V |
| C307 | 1-162-876-11 | s | CERAMIC 75PF 5% 50V |
| C308 | 1-162-669-11 | s | CERAMIC 15PF 5% 50V |
| C309 | 1-161-900-11 | s | CERAMIC 1uF 50V |
| C310 | 1-162-871-11 | s | CERAMIC 47PF 5% 50V |
| C311 | 1-164-119-11 | s | CERAMIC 110PF 5% 50V |
| C312 | 1-162-873-11 | s | CERAMIC 56PF 5% 50V |
| C313 | 1-162-876-11 | s | CERAMIC 75PF 5% 50V |
| C314 | 1-164-119-11 | s | CERAMIC 110PF 5% 50V |
| C315 | 1-162-873-11 | s | CERAMIC 56PF 5% 50V |
| C316 | 1-162-876-11 | s | CERAMIC 75PF 5% 50V |
| C317 | 1-162-669-11 | s | CERAMIC 15PF 5% 50V |
| C318 | 1-161-900-11 | s | CERAMIC 1uF 50V |
| C319 | 1-164-120-11 | s | CERAMIC 130PF 5% 50V |
| C320 | 1-164-120-11 | s | CERAMIC 130PF 5% 50V |
| C321 | 1-164-208-11 | s | CERAMIC 0.1uF 99% 50V |
| C322 | 1-164-208-11 | s | CERAMIC 0.1uF 99% 50V |
| C323 | 1-131-368-00 | s | TANTALUM 3.3uF 10% 16V |
| C324 | 1-131-368-00 | s | TANTALUM 3.3uF 10% 16V |
| C325 | 1-162-708-11 | s | CERAMIC 82PF 1% 50V |
| C326 | 1-162-667-11 | s | CERAMIC 10PF 5% 50V |
| C327 | 1-164-208-11 | s | CERAMIC 0.1uF 99% 50V |
| C328 | 1-124-596-11 | s | ELECT 27uF 20% 16V |
| C329 | 1-124-596-11 | s | ELECT 27uF 20% 16V |
| C330 | 1-164-208-11 | s | CERAMIC 0.1uF 99% 50V |
| C331 | 1-164-208-11 | s | CERAMIC 0.1uF 99% 50V |
| C341 | 1-164-208-11 | s | CERAMIC 0.1uF 99% 50V |

(AU-109 BOARD)

| Ref. No. or Q'ty | Part No. | SP | Description |
|---|---|---|---|
| C342 | 1-164-208-11 | s | CERAMIC 0.1uF 99% 50V |
| C343 | 1-164-208-11 | s | CERAMIC 0.1uF 99% 50V |
| C344 | 1-164-208-11 | s | CERAMIC 0.1uF 99% 50V |
| C345 | 1-164-208-11 | s | CERAMIC 0.1uF 99% 50V |
| C346 | 1-164-208-11 | s | CERAMIC 0.1uF 99% 50V |
| C347 | 1-164-208-11 | s | CERAMIC 0.1uF 99% 50V |
| C348 | 1-164-208-11 | s | CERAMIC 0.1uF 99% 50V |
| C349 | 1-164-208-11 | s | CERAMIC 0.1uF 99% 50V |
| C350 | 1-164-208-11 | s | CERAMIC 0.1uF 99% 50V |
| C351 | 1-164-208-11 | s | CERAMIC 0.1uF 99% 50V |
| C352 | 1-164-208-11 | s | CERAMIC 0.1uF 99% 50V |
| C353 | 1-164-208-11 | s | CERAMIC 0.1uF 99% 50V |
| C354 | 1-164-208-11 | s | CERAMIC 0.1uF 99% 50V |
| C355 | 1-164-208-11 | s | CERAMIC 0.1uF 99% 50V |
| C356 | 1-164-208-11 | s | CERAMIC 0.1uF 99% 50V |
| C357 | 1-164-208-11 | s | CERAMIC 0.1uF 99% 50V |
| C401 | 1-162-871-11 | s | CERAMIC 47PF 5% 50V |
| C402 | 1-164-119-11 | s | CERAMIC 110PF 5% 50V |
| C403 | 1-162-873-11 | s | CERAMIC 56PF 5% 50V |
| C404 | 1-162-876-11 | s | CERAMIC 75PF 5% 50V |
| C405 | 1-164-119-11 | s | CERAMIC 110PF 5% 50V |
| C406 | 1-162-873-11 | s | CERAMIC 56PF 5% 50V |
| C407 | 1-162-876-11 | s | CERAMIC 75PF 5% 50V |
| C408 | 1-162-669-11 | s | CERAMIC 15PF 5% 50V |
| C409 | 1-161-900-11 | s | CERAMIC 1uF 50V |
| C410 | 1-162-871-11 | s | CERAMIC 47PF 5% 50V |
| C411 | 1-164-119-11 | s | CERAMIC 110PF 5% 50V |
| C412 | 1-162-873-11 | s | CERAMIC 56PF 5% 50V |
| C413 | 1-162-876-11 | s | CERAMIC 75PF 5% 50V |
| C414 | 1-164-119-11 | s | CERAMIC 110PF 5% 50V |
| C415 | 1-162-873-11 | s | CERAMIC 56PF 5% 50V |
| C416 | 1-162-876-11 | s | CERAMIC 75PF 5% 50V |
| C417 | 1-162-669-11 | s | CERAMIC 15PF 5% 50V |
| C418 | 1-161-900-11 | s | CERAMIC 1uF 50V |
| C419 | 1-164-120-11 | s | CERAMIC 130PF 5% 50V |
| C420 | 1-164-120-11 | s | CERAMIC 130PF 5% 50V |
| C421 | 1-164-208-11 | s | CERAMIC 0.1uF 99% 50V |
| C422 | 1-164-208-11 | s | CERAMIC 0.1uF 99% 50V |
| C423 | 1-131-368-00 | s | TANTALUM 3.3uF 10% 16V |
| C424 | 1-131-368-00 | s | TANTALUM 3.3uF 10% 16V |
| C425 | 1-162-708-11 | s | CERAMIC 82PF 1% 50V |
| C426 | 1-162-667-11 | s | CERAMIC 10PF 5% 50V |
| C427 | 1-164-208-11 | s | CERAMIC 0.1uF 99% 50V |
| C428 | 1-124-596-11 | s | ELECT 27uF 20% 16V |
| C429 | 1-124-596-11 | s | ELECT 27uF 20% 16V |
| C430 | 1-164-208-11 | s | CERAMIC 0.1uF 99% 50V |
| C431 | 1-164-208-11 | s | CERAMIC 0.1uF 99% 50V |
| C441 | 1-164-208-11 | s | CERAMIC 0.1uF 99% 50V |
| C442 | 1-164-208-11 | s | CERAMIC 0.1uF 99% 50V |
| C443 | 1-164-208-11 | s | CERAMIC 0.1uF 99% 50V |
| C444 | 1-164-208-11 | s | CERAMIC 0.1uF 99% 50V |
| C445 | 1-164-208-11 | s | CERAMIC 0.1uF 99% 50V |
| C446 | 1-164-208-11 | s | CERAMIC 0.1uF 99% 50V |
| C447 | 1-164-208-11 | s | CERAMIC 0.1uF 99% 50V |
| C448 | 1-164-208-11 | s | CERAMIC 0.1uF 99% 50V |
| C449 | 1-164-208-11 | s | CERAMIC 0.1uF 99% 50V |
| C450 | 1-164-208-11 | s | CERAMIC 0.1uF 99% 50V |
| C451 | 1-164-208-11 | s | CERAMIC 0.1uF 99% 50V |
| C452 | 1-164-208-11 | s | CERAMIC 0.1uF 99% 50V |

(AU-109 BOARD)

| Ref. No. or Q'ty | Part No. | SP | Description |
|---|---|---|---|
| C453 | 1-164-208-11 | s | CERAMIC 0.1uF 99% 50V |
| C454 | 1-164-208-11 | s | CERAMIC 0.1uF 99% 50V |
| C455 | 1-164-208-11 | s | CERAMIC 0.1uF 99% 50V |
| C456 | 1-164-208-11 | s | CERAMIC 0.1uF 99% 50V |
| C501 | 1-162-871-11 | s | CERAMIC 47PF 5% 50V |
| C502 | 1-164-119-11 | s | CERAMIC 110PF 5% 50V |
| C503 | 1-162-873-11 | s | CERAMIC 56PF 5% 50V |
| C504 | 1-162-876-11 | s | CERAMIC 75PF 5% 50V |
| C505 | 1-164-119-11 | s | CERAMIC 110PF 5% 50V |
| C506 | 1-162-873-11 | s | CERAMIC 56PF 5% 50V |
| C507 | 1-162-876-11 | s | CERAMIC 75PF 5% 50V |
| C508 | 1-162-669-11 | s | CERAMIC 15PF 5% 50V |
| C509 | 1-161-900-11 | s | CERAMIC 1uF 50V |
| C510 | 1-162-871-11 | s | CERAMIC 47PF 5% 50V |
| C511 | 1-164-119-11 | s | CERAMIC 110PF 5% 50V |
| C512 | 1-162-873-11 | s | CERAMIC 56PF 5% 50V |
| C513 | 1-162-876-11 | s | CERAMIC 75PF 5% 50V |
| C514 | 1-164-119-11 | s | CERAMIC 110PF 5% 50V |
| C515 | 1-162-873-11 | s | CERAMIC 56PF 5% 50V |
| C516 | 1-162-876-11 | s | CERAMIC 75PF 5% 50V |
| C517 | 1-162-669-11 | s | CERAMIC 15PF 5% 50V |
| C518 | 1-161-900-11 | s | CERAMIC 1uF 50V |
| C519 | 1-164-120-11 | s | CERAMIC 130PF 5% 50V |
| C520 | 1-164-120-11 | s | CERAMIC 130PF 5% 50V |
| C521 | 1-164-208-11 | s | CERAMIC 0.1uF 99% 50V |
| C522 | 1-164-208-11 | s | CERAMIC 0.1uF 99% 50V |
| C523 | 1-131-368-00 | s | TANTALUM 3.3uF 10% 16V |
| C524 | 1-131-368-00 | s | TANTALUM 3.3uF 10% 16V |
| C525 | 1-162-708-11 | s | CERAMIC 82PF 1% 50V |
| C526 | 1-162-667-11 | s | CERAMIC 10PF 5% 50V |
| C527 | 1-164-208-11 | s | CERAMIC 0.1uF 99% 50V |
| C528 | 1-124-596-11 | s | ELECT 27uF 20% 16V |
| C529 | 1-124-596-11 | s | ELECT 27uF 20% 16V |
| C530 | 1-164-208-11 | s | CERAMIC 0.1uF 99% 50V |
| C531 | 1-164-208-11 | s | CERAMIC 0.1uF 99% 50V |
| C541 | 1-164-208-11 | s | CERAMIC 0.1uF 99% 50V |
| C542 | 1-164-208-11 | s | CERAMIC 0.1uF 99% 50V |
| C543 | 1-164-208-11 | s | CERAMIC 0.1uF 99% 50V |
| C544 | 1-164-208-11 | s | CERAMIC 0.1uF 99% 50V |
| C545 | 1-164-208-11 | s | CERAMIC 0.1uF 99% 50V |
| C546 | 1-164-208-11 | s | CERAMIC 0.1uF 99% 50V |
| C547 | 1-164-208-11 | s | CERAMIC 0.1uF 99% 50V |
| C548 | 1-164-208-11 | s | CERAMIC 0.1uF 99% 50V |
| C549 | 1-164-208-11 | s | CERAMIC 0.1uF 99% 50V |
| C550 | 1-164-208-11 | s | CERAMIC 0.1uF 99% 50V |
| C551 | 1-164-208-11 | s | CERAMIC 0.1uF 99% 50V |
| C552 | 1-164-208-11 | s | CERAMIC 0.1uF 99% 50V |
| C553 | 1-164-208-11 | s | CERAMIC 0.1uF 99% 50V |
| C554 | 1-164-208-11 | s | CERAMIC 0.1uF 99% 50V |
| C555 | 1-164-208-11 | s | CERAMIC 0.1uF 99% 50V |
| C556 | 1-164-208-11 | s | CERAMIC 0.1uF 99% 50V |
| C557 | 1-164-208-11 | s | CERAMIC 0.1uF 99% 50V |
| C601 | 1-162-871-11 | s | CERAMIC 47PF 5% 50V |
| C602 | 1-164-119-11 | s | CERAMIC 110PF 5% 50V |
| C603 | 1-162-873-11 | s | CERAMIC 56PF 5% 50V |
| C604 | 1-162-876-11 | s | CERAMIC 75PF 5% 50V |
| C605 | 1-164-119-11 | s | CERAMIC 110PF 5% 50V |
| C606 | 1-162-873-11 | s | CERAMIC 56PF 5% 50V |
| C607 | 1-162-876-11 | s | CERAMIC 75PF 5% 50V |

| Ref. No. or Q'ty | Part No. | SP | Description |
|---|---|---|---|
| C608 | 1-162-669-11 | s | CERAMIC 15PF 5% 50V |
| C609 | 1-161-900-11 | s | CERAMIC 1uF 50V |
| C610 | 1-162-871-11 | s | CERAMIC 47PF 5% 50V |
| C611 | 1-164-119-11 | s | CERAMIC 110PF 5% 50V |
| C612 | 1-162-873-11 | s | CERAMIC 56PF 5% 50V |
| C613 | 1-162-876-11 | s | CERAMIC 75PF 5% 50V |
| C614 | 1-164-119-11 | s | CERAMIC 110PF 5% 50V |
| C615 | 1-162-873-11 | s | CERAMIC 56PF 5% 50V |
| C616 | 1-162-876-11 | s | CERAMIC 75PF 5% 50V |
| C617 | 1-162-669-11 | s | CERAMIC 15PF 5% 50V |
| C618 | 1-161-900-11 | s | CERAMIC 1uF 50V |
| C619 | 1-164-120-11 | s | CERAMIC 130PF 5% 50V |
| C620 | 1-164-120-11 | s | CERAMIC 130PF 5% 50V |
| C621 | 1-164-208-11 | s | CERAMIC 0.1uF 99% 50V |
| C622 | 1-164-208-11 | s | CERAMIC 0.1uF 99% 50V |
| C623 | 1-131-368-00 | s | TANTALUM 3.3uF 10% 16V |
| C624 | 1-131-368-00 | s | TANTALUM 3.3uF 10% 16V |
| C625 | 1-162-708-11 | s | CERAMIC 82PF 1% 50V |
| C626 | 1-162-667-11 | s | CERAMIC 10PF 5% 50V |
| C627 | 1-164-208-11 | s | CERAMIC 0.1uF 99% 50V |
| C628 | 1-124-596-11 | s | ELECT 27uF 20% 16V |
| C629 | 1-124-596-11 | s | ELECT 27uF 20% 16V |
| C630 | 1-164-208-11 | s | CERAMIC 0.1uF 99% 50V |
| C631 | 1-164-208-11 | s | CERAMIC 0.1uF 99% 50V |
| C641 | 1-164-208-11 | s | CERAMIC 0.1uF 99% 50V |
| C642 | 1-164-208-11 | s | CERAMIC 0.1uF 99% 50V |
| C643 | 1-164-208-11 | s | CERAMIC 0.1uF 99% 50V |
| C644 | 1-164-208-11 | s | CERAMIC 0.1uF 99% 50V |
| C645 | 1-164-208-11 | s | CERAMIC 0.1uF 99% 50V |
| C646 | 1-164-208-11 | s | CERAMIC 0.1uF 99% 50V |
| C647 | 1-164-208-11 | s | CERAMIC 0.1uF 99% 50V |
| C648 | 1-164-208-11 | s | CERAMIC 0.1uF 99% 50V |
| C649 | 1-164-208-11 | s | CERAMIC 0.1uF 99% 50V |
| C650 | 1-164-208-11 | s | CERAMIC 0.1uF 99% 50V |
| C651 | 1-164-208-11 | s | CERAMIC 0.1uF 99% 50V |
| C652 | 1-164-208-11 | s | CERAMIC 0.1uF 99% 50V |
| C653 | 1-164-208-11 | s | CERAMIC 0.1uF 99% 50V |
| C654 | 1-164-208-11 | s | CERAMIC 0.1uF 99% 50V |
| C655 | 1-164-208-11 | s | CERAMIC 0.1uF 99% 50V |
| C656 | 1-164-208-11 | s | CERAMIC 0.1uF 99% 50V |
| C701 | 1-162-871-11 | s | CERAMIC 47PF 5% 50V |
| C702 | 1-164-119-11 | s | CERAMIC 110PF 5% 50V |
| C703 | 1-162-873-11 | s | CERAMIC 56PF 5% 50V |
| C704 | 1-162-876-11 | s | CERAMIC 75PF 5% 50V |
| C705 | 1-164-119-11 | s | CERAMIC 110PF 5% 50V |
| C706 | 1-162-873-11 | s | CERAMIC 56PF 5% 50V |
| C707 | 1-162-876-11 | s | CERAMIC 75PF 5% 50V |
| C708 | 1-162-669-11 | s | CERAMIC 15PF 5% 50V |
| C709 | 1-161-900-11 | s | CERAMIC 1uF 50V |
| C710 | 1-162-871-11 | s | CERAMIC 47PF 5% 50V |
| C711 | 1-164-119-11 | s | CERAMIC 110PF 5% 50V |
| C712 | 1-162-873-11 | s | CERAMIC 56PF 5% 50V |
| C713 | 1-162-876-11 | s | CERAMIC 75PF 5% 50V |
| C714 | 1-164-119-11 | s | CERAMIC 110PF 5% 50V |
| C715 | 1-162-873-11 | s | CERAMIC 56PF 5% 50V |
| C716 | 1-162-876-11 | s | CERAMIC 75PF 5% 50V |
| C717 | 1-162-669-11 | s | CERAMIC 15PF 5% 50V |
| C718 | 1-161-900-11 | s | CERAMIC 1uF 50V |
| C719 | 1-164-120-11 | s | CERAMIC 130PF 5% 50V |

| Ref. No. or Q'ty | Part No. | SP | Description |
|---|---|---|---|
| C720 | 1-164-120-11 | s | CERAMIC 130PF 5% 50V |
| C721 | 1-164-208-11 | s | CERAMIC 0.1uF 99% 50V |
| C722 | 1-164-208-11 | s | CERAMIC 0.1uF 99% 50V |
| C723 | 1-131-368-00 | s | TANTALUM 3.3uF 10% 16V |
| C724 | 1-131-368-00 | s | TANTALUM 3.3uF 10% 16V |
| C725 | 1-162-708-11 | s | CERAMIC 82PF 1% 50V |
| C726 | 1-162-667-11 | s | CERAMIC 10PF 5% 50V |
| C727 | 1-164-208-11 | s | CERAMIC 0.1uF 99% 50V |
| C728 | 1-124-596-11 | s | ELECT 27uF 20% 16V |
| C729 | 1-124-596-11 | s | ELECT 27uF 20% 16V |
| C730 | 1-164-208-11 | s | CERAMIC 0.1uF 99% 50V |
| C731 | 1-164-208-11 | s | CERAMIC 0.1uF 99% 50V |
| C741 | 1-164-208-11 | s | CERAMIC 0.1uF 99% 50V |
| C742 | 1-164-208-11 | s | CERAMIC 0.1uF 99% 50V |
| C743 | 1-164-208-11 | s | CERAMIC 0.1uF 99% 50V |
| C744 | 1-164-208-11 | s | CERAMIC 0.1uF 99% 50V |
| C745 | 1-164-208-11 | s | CERAMIC 0.1uF 99% 50V |
| C746 | 1-164-208-11 | s | CERAMIC 0.1uF 99% 50V |
| C747 | 1-164-208-11 | s | CERAMIC 0.1uF 99% 50V |
| C748 | 1-164-208-11 | s | CERAMIC 0.1uF 99% 50V |
| C749 | 1-164-208-11 | s | CERAMIC 0.1uF 99% 50V |
| C750 | 1-164-208-11 | s | CERAMIC 0.1uF 99% 50V |
| C751 | 1-164-208-11 | s | CERAMIC 0.1uF 99% 50V |
| C752 | 1-164-208-11 | s | CERAMIC 0.1uF 99% 50V |
| C753 | 1-164-208-11 | s | CERAMIC 0.1uF 99% 50V |
| C754 | 1-164-208-11 | s | CERAMIC 0.1uF 99% 50V |
| C755 | 1-164-208-11 | s | CERAMIC 0.1uF 99% 50V |
| C756 | 1-164-208-11 | s | CERAMIC 0.1uF 99% 50V |
| C757 | 1-164-208-11 | s | CERAMIC 0.1uF 99% 50V |
| C801 | 1-162-871-11 | s | CERAMIC 47PF 5% 50V |
| C802 | 1-164-119-11 | s | CERAMIC 110PF 5% 50V |
| C803 | 1-162-873-11 | s | CERAMIC 56PF 5% 50V |
| C804 | 1-162-876-11 | s | CERAMIC 75PF 5% 50V |
| C805 | 1-164-119-11 | s | CERAMIC 110PF 5% 50V |
| C806 | 1-162-873-11 | s | CERAMIC 56PF 5% 50V |
| C807 | 1-162-876-11 | s | CERAMIC 75PF 5% 50V |
| C808 | 1-162-669-11 | s | CERAMIC 15PF 5% 50V |
| C809 | 1-161-900-11 | s | CERAMIC 1uF 50V |
| C810 | 1-162-871-11 | s | CERAMIC 47PF 5% 50V |
| C811 | 1-164-119-11 | s | CERAMIC 110PF 5% 50V |
| C812 | 1-162-873-11 | s | CERAMIC 56PF 5% 50V |
| C813 | 1-162-876-11 | s | CERAMIC 75PF 5% 50V |
| C814 | 1-164-119-11 | s | CERAMIC 110PF 5% 50V |
| C815 | 1-162-873-11 | s | CERAMIC 56PF 5% 50V |
| C816 | 1-162-876-11 | s | CERAMIC 75PF 5% 50V |
| C817 | 1-162-669-11 | s | CERAMIC 15PF 5% 50V |
| C818 | 1-161-900-11 | s | CERAMIC 1uF 50V |
| C819 | 1-164-120-11 | s | CERAMIC 130PF 5% 50V |
| C820 | 1-164-120-11 | s | CERAMIC 130PF 5% 50V |
| C821 | 1-164-208-11 | s | CERAMIC 0.1uF 99% 50V |
| C822 | 1-164-208-11 | s | CERAMIC 0.1uF 99% 50V |
| C823 | 1-131-368-00 | s | TANTALUM 3.3uF 10% 16V |
| C824 | 1-131-368-00 | s | TANTALUM 3.3uF 10% 16V |
| C825 | 1-162-708-11 | s | CERAMIC 82PF 1% 50V |
| C826 | 1-162-667-11 | s | CERAMIC 10PF 5% 50V |
| C827 | 1-164-208-11 | s | CERAMIC 0.1uF 99% 50V |
| C828 | 1-124-596-11 | s | ELECT 27uF 20% 16V |
| C829 | 1-124-596-11 | s | ELECT 27uF 20% 16V |
| C830 | 1-164-208-11 | s | CERAMIC 0.1uF 99% 50V |

(AU-109 BOARD)

| Ref. No. or Q'ty | Part No. | SP | Description |
|---|---|---|---|
| C831 | 1-164-208-11 | s | CERAMIC 0.1uF 99% 50V |
| C841 | 1-164-208-11 | s | CERAMIC 0.1uF 99% 50V |
| C842 | 1-164-208-11 | s | CERAMIC 0.1uF 99% 50V |
| C843 | 1-164-208-11 | s | CERAMIC 0.1uF 99% 50V |
| C844 | 1-164-208-11 | s | CERAMIC 0.1uF 99% 50V |
| C845 | 1-164-208-11 | s | CERAMIC 0.1uF 99% 50V |
| C846 | 1-164-208-11 | s | CERAMIC 0.1uF 99% 50V |
| C847 | 1-164-208-11 | s | CERAMIC 0.1uF 99% 50V |
| C848 | 1-164-208-11 | s | CERAMIC 0.1uF 99% 50V |
| C849 | 1-164-208-11 | s | CERAMIC 0.1uF 99% 50V |
| C850 | 1-164-208-11 | s | CERAMIC 0.1uF 99% 50V |
| C851 | 1-164-208-11 | s | CERAMIC 0.1uF 99% 50V |
| C852 | 1-164-208-11 | s | CERAMIC 0.1uF 99% 50V |
| C853 | 1-164-208-11 | s | CERAMIC 0.1uF 99% 50V |
| C854 | 1-164-208-11 | s | CERAMIC 0.1uF 99% 50V |
| C855 | 1-164-208-11 | s | CERAMIC 0.1uF 99% 50V |
| C856 | 1-164-208-11 | s | CERAMIC 0.1uF 99% 50V |
| C901 | 1-131-344-00 | s | TANTALUM 0.33uF 10% 35V |
| C902 | 1-131-368-00 | s | TANTALUM 3.3uF 10% 16V |
| C903 | 1-131-344-00 | s | TANTALUM 0.33uF 10% 35V |
| C904 | 1-131-368-00 | s | TANTALUM 3.3uF 10% 16V |
| C905 | 1-161-898-11 | s | CERAMIC 0.47uF 50V |
| C906 | 1-130-471-00 | s | MYLAR 0.001uF 5% 50V |
| C907 | 1-162-708-11 | s | CERAMIC 82PF 1% 50V |
| C908 | 1-126-516-11 | s | ELECT 120uF 20% 16V |
| C909 | 1-126-516-11 | s | ELECT 120uF 20% 16V |
| C910 | 1-131-353-00 | s | TANTALUM 10uF 10% 35V |
| C911 | 1-162-673-11 | s | CERAMIC 33PF 5% 50V |
| C912 | 1-162-669-11 | s | CERAMIC 15PF 5% 50V |
| C913 | 1-130-473-00 | s | MYLAR 0.0015uF 5% 50V |
| C914 | 1-161-898-11 | s | CERAMIC 0.47uF 50V |
| C915 | 1-130-471-00 | s | MYLAR 0.001uF 5% 50V |
| C916 | 1-162-673-11 | s | CERAMIC 33PF 5% 50V |
| C917 | 1-162-718-11 | s | CERAMIC 220PF 1% 50V |
| C918 | 1-162-714-11 | s | CERAMIC 150PF 1% 50V |
| C919 | 1-130-485-00 | s | MYLAR 0.015uF 5% 50V |
| C920 | 1-130-485-00 | s | MYLAR 0.015uF 5% 50V |
| C921 | 1-162-726-11 | s | CERAMIC 470PF 1% 50V |
| C922 | 1-162-714-11 | s | CERAMIC 150PF 1% 50V |
| C923 | 1-162-714-11 | s | CERAMIC 150PF 1% 50V |
| C924 | 1-162-726-11 | s | CERAMIC 470PF 1% 50V |
| C925 | 1-161-900-11 | s | CERAMIC 1uF 50V |
| C926 | 1-162-673-11 | s | CERAMIC 33PF 5% 50V |
| C927 | 1-130-478-00 | s | MYLAR 0.0039uF 5% 50V |
| C928 | 1-161-898-11 | s | CERAMIC 0.47uF 50V |
| C929 | 1-130-479-00 | s | MYLAR 0.0047uF 5% 50V |
| C930 | 1-130-483-00 | s | MYLAR 0.01uF 5% 50V |
| C931 | 1-130-480-00 | s | MYLAR 0.0056uF 5% 50V |
| C932 | 1-130-485-00 | s | MYLAR 0.015uF 5% 50V |
| C933 | 1-131-353-00 | s | TANTALUM 10uF 10% 35V |
| C934 | 1-131-368-00 | s | TANTALUM 3.3uF 10% 16V |
| C935 | 1-162-710-11 | s | CERAMIC 100PF 1% 50V |
| C936 | 1-130-495-00 | s | MYLAR 0.1uF 5% 50V |
| C937 | 1-131-353-00 | s | TANTALUM 10uF 10% 35V |
| C938 | 1-131-353-00 | s | TANTALUM 10uF 10% 35V |
| C939 | 1-126-096-11 | s | ELECT 10uF 20% 35V |
| C940 | 1-126-096-11 | s | ELECT 10uF 20% 35V |
| C941 | 1-126-096-11 | s | ELECT 10uF 20% 35V |
| C942 | 1-126-096-11 | s | ELECT 10uF 20% 35V |

(AU-109 BOARD)

| Ref. No. or Q'ty | Part No. | SP | Description |
|---|---|---|---|
| C943 | 1-164-208-11 | s | CERAMIC 0.1uF 99% 50V |
| C944 | 1-124-510-11 | s | ELECT 220uF 20% 25V |
| C945 | 1-124-510-11 | s | ELECT 220uF 20% 25V |
| C946 | 1-164-208-11 | s | CERAMIC 0.1uF 99% 50V |
| C947 | 1-164-208-11 | s | CERAMIC 0.1uF 99% 50V |
| C948 | 1-124-510-11 | s | ELECT 220uF 20% 25V |
| C949 | 1-124-510-11 | s | ELECT 220uF 20% 25V |
| C950 | 1-164-208-11 | s | CERAMIC 0.1uF 99% 50V |
| C951 | 1-164-208-11 | s | CERAMIC 0.1uF 99% 50V |
| C952 | 1-124-566-11 | s | ELECT 120uF 20% 6.3V |
| C953 | 1-124-566-11 | s | ELECT 120uF 20% 6.3V |
| C954 | 1-164-208-11 | s | CERAMIC 0.1uF 99% 50V |
| C955 | 1-162-726-11 | s | CERAMIC 470PF 1% 50V |
| C956 | 1-130-480-00 | s | MYLAR 0.0056uF 5% 50V |
| C957 | 1-131-347-00 | s | TANTALUM 1uF 10% 35V |
| C958 | 1-131-347-00 | s | TANTALUM 1uF 10% 35V |
| C959 | 1-164-208-11 | s | CERAMIC 0.1uF 99% 50V |
| C960 | 1-164-208-11 | s | CERAMIC 0.1uF 99% 50V |
| C961 | 1-164-208-11 | s | CERAMIC 0.1uF 99% 50V |
| C962 | 1-164-208-11 | s | CERAMIC 0.1uF 99% 50V |
| C963 | 1-164-208-11 | s | CERAMIC 0.1uF 99% 50V |
| C964 | 1-164-208-11 | s | CERAMIC 0.1uF 99% 50V |
| C965 | 1-164-208-11 | s | CERAMIC 0.1uF 99% 50V |
| C966 | 1-164-208-11 | s | CERAMIC 0.1uF 99% 50V |
| C967 | 1-164-208-11 | s | CERAMIC 0.1uF 99% 50V |
| C968 | 1-164-208-11 | s | CERAMIC 0.1uF 99% 50V |
| C969 | 1-164-208-11 | s | CERAMIC 0.1uF 99% 50V |
| C970 | 1-164-208-11 | s | CERAMIC 0.1uF 99% 50V |
| C971 | 1-164-208-11 | s | CERAMIC 0.1uF 99% 50V |
| C972 | 1-164-208-11 | s | CERAMIC 0.1uF 99% 50V |
| C973 | 1-164-208-11 | s | CERAMIC 0.1uF 99% 50V |
| C974 | 1-164-208-11 | s | CERAMIC 0.1uF 99% 50V |
| C975 | 1-164-208-11 | s | CERAMIC 0.1uF 99% 50V |
| C976 | 1-164-208-11 | s | CERAMIC 0.1uF 99% 50V |
| C977 | 1-164-208-11 | s | CERAMIC 0.1uF 99% 50V |
| C978 | 1-164-208-11 | s | CERAMIC 0.1uF 99% 50V |
| C979 | 1-164-208-11 | s | CERAMIC 0.1uF 99% 50V |
| C980 | 1-164-208-11 | s | CERAMIC 0.1uF 99% 50V |
| C981 | 1-164-208-11 | s | CERAMIC 0.1uF 99% 50V |
| C982 | 1-164-208-11 | s | CERAMIC 0.1uF 99% 50V |
| C983 | 1-164-208-11 | s | CERAMIC 0.1uF 99% 50V |
| C984 | 1-164-208-11 | s | CERAMIC 0.1uF 99% 50V |
| C985 | 1-164-208-11 | s | CERAMIC 0.1uF 99% 50V |
| C986 | 1-164-208-11 | s | CERAMIC 0.1uF 99% 50V |
| C987 | 1-164-208-11 | s | CERAMIC 0.1uF 99% 50V |
| C988 | 1-164-208-11 | s | CERAMIC 0.1uF 99% 50V |
| C990 | 1-131-368-00 | s | TANTALUM 3.3uF 10% 16V |
| C991 | 1-131-368-00 | s | TANTALUM 3.3uF 10% 16V |
| C992 | 1-131-368-00 | s | TANTALUM 3.3uF 10% 16V |
| C993 | 1-131-365-00 | s | TANTALUM 10uF 10% 20V |
| C994 | 1-162-710-11 | s | CERAMIC 100PF 1% 50V |
| C995 | 1-131-368-00 | s | TANTALUM 3.3uF 10% 16V |
| C996 | 1-130-478-00 | s | MYLAR 0.0039uF 5% 50V |
| C997 | 1-130-478-00 | s | MYLAR 0.0039uF 5% 50V |
| C998 | 1-130-478-00 | s | MYLAR 0.0039uF 5% 50V |
| C999 | 1-130-478-00 | s | MYLAR 0.0039uF 5% 50V |
| C1000 | 1-162-712-11 | s | CERAMIC 120PF 1% 50V |
| C1001 | 1-131-365-00 | s | TANTALUM 10uF 10% 20V |
| C1002 | 1-131-365-00 | s | TANTALUM 10uF 10% 20V |

(AU-109 BOARD)

| Ref. No. or Q'ty | Part No. | SP | Description |
|---|---|---|---|
| C1003 | 1-107-042-00 | s | MICA 2.2PF 500V |
| CN301 | 1-506-748-11 | o | CONNECTOR, DIN 96P, MALE |
| CN302 | 1-506-748-11 | o | CONNECTOR, DIN 96P, MALE |
| CN801 | 1-563-761-11 | o | CONNECTOR, 44P, MALE |
| CN802 | 1-563-761-11 | o | CONNECTOR, 44P, MALE |
| CN803 | 1-565-691-11 | o | CONNECTOR, PS 20P, MALE |
| CN804 | 1-565-885-11 | o | CONNECTOR, PS 10P, MALE |
| CN805 | 1-568-232-11 | o | CONNECTOR, 68P, MALE |
| CN19 | 1-540-069-11 | s | SOCKET, IC (IC113) 84P |
| D1 | 8-719-911-19 | s | DIODE 1SS119 |
| D101 | 8-719-981-01 | s | DIODE ERA81-004 |
| D102 | 8-719-981-01 | s | DIODE ERA81-004 |
| D103 | 8-719-981-01 | s | DIODE ERA81-004 |
| D104 | 8-719-981-01 | s | DIODE ERA81-004 |
| D105 | 8-719-911-06 | s | DIODE 1SS106 |
| D106 | 8-719-911-06 | s | DIODE 1SS106 |
| D107 | 8-719-911-06 | s | DIODE 1SS106 |
| D201 | 8-719-981-01 | s | DIODE ERA81-004 |
| D202 | 8-719-981-01 | s | DIODE ERA81-004 |
| D203 | 8-719-981-01 | s | DIODE ERA81-004 |
| D204 | 8-719-981-01 | s | DIODE ERA81-004 |
| D205 | 8-719-911-06 | s | DIODE 1SS106 |
| D206 | 8-719-911-06 | s | DIODE 1SS106 |
| D207 | 8-719-911-06 | s | DIODE 1SS106 |
| D301 | 8-719-981-01 | s | DIODE ERA81-004 |
| D302 | 8-719-981-01 | s | DIODE ERA81-004 |
| D303 | 8-719-981-01 | s | DIODE ERA81-004 |
| D304 | 8-719-981-01 | s | DIODE ERA81-004 |
| D305 | 8-719-911-06 | s | DIODE 1SS106 |
| D306 | 8-719-911-06 | s | DIODE 1SS106 |
| D307 | 8-719-911-06 | s | DIODE 1SS106 |
| D401 | 8-719-981-01 | s | DIODE ERA81-004 |
| D402 | 8-719-981-01 | s | DIODE ERA81-004 |
| D403 | 8-719-981-01 | s | DIODE ERA81-004 |
| D404 | 8-719-981-01 | s | DIODE ERA81-004 |
| D405 | 8-719-911-06 | s | DIODE 1SS106 |
| D406 | 8-719-911-06 | s | DIODE 1SS106 |
| D407 | 8-719-911-06 | s | DIODE 1SS106 |
| D501 | 8-719-981-01 | s | DIODE ERA81-004 |
| D502 | 8-719-981-01 | s | DIODE ERA81-004 |
| D503 | 8-719-981-01 | s | DIODE ERA81-004 |
| D504 | 8-719-981-01 | s | DIODE ERA81-004 |
| D505 | 8-719-911-06 | s | DIODE 1SS106 |
| D506 | 8-719-911-06 | s | DIODE 1SS106 |
| D507 | 8-719-911-06 | s | DIODE 1SS106 |
| D601 | 8-719-981-01 | s | DIODE ERA81-004 |
| D602 | 8-719-981-01 | s | DIODE ERA81-004 |
| D603 | 8-719-981-01 | s | DIODE ERA81-004 |
| D604 | 8-719-981-01 | s | DIODE ERA81-004 |
| D605 | 8-719-911-06 | s | DIODE 1SS106 |
| D606 | 8-719-911-06 | s | DIODE 1SS106 |
| D607 | 8-719-911-06 | s | DIODE 1SS106 |
| D701 | 8-719-981-01 | s | DIODE ERA81-004 |
| D702 | 8-719-981-01 | s | DIODE ERA81-004 |
| D703 | 8-719-981-01 | s | DIODE ERA81-004 |
| D704 | 8-719-981-01 | s | DIODE ERA81-004 |
| D705 | 8-719-911-06 | s | DIODE 1SS106 |
| D706 | 8-719-911-06 | s | DIODE 1SS106 |
| D707 | 8-719-911-06 | s | DIODE 1SS106 |
| D801 | 8-719-981-01 | s | DIODE ERA81-004 |
| D802 | 8-719-981-01 | s | DIODE ERA81-004 |
| D803 | 8-719-981-01 | s | DIODE ERA81-004 |
| D804 | 8-719-981-01 | s | DIODE ERA81-004 |
| D805 | 8-719-911-06 | s | DIODE 1SS106 |
| D806 | 8-719-911-06 | s | DIODE 1SS106 |
| D807 | 8-719-911-06 | s | DIODE 1SS106 |
| D901 | 8-719-981-01 | s | DIODE ERA81-004 |
| D902 | 8-719-911-19 | s | DIODE 1SS119 |
| D903 | 8-719-981-01 | s | DIODE ERA81-004 |
| D904 | 8-719-911-19 | s | DIODE 1SS119 |
| D905 | 8-719-911-19 | s | DIODE 1SS119 |
| D906 | 8-719-911-19 | s | DIODE 1SS119 |
| D907 | 8-719-911-19 | s | DIODE 1SS119 |
| D908 | 8-719-981-01 | s | DIODE ERA81-004 |
| IC1 | 8-759-947-36 | s | IC MB8422-90LP |
| IC2 | 8-759-978-92 | s | IC 74AC32PC |
| IC3 | 8-759-917-72 | s | IC 74F244PC |
| IC4 | 8-759-981-01 | s | IC 74ACT245PC |
| IC5 | 8-759-552-81 | s | IC PALCE16V8-AU109-01-1 |
| IC6 | 8-759-047-40 | s | IC 27C256-AU02-1-3 |
| IC7 | 8-759-978-92 | s | IC 74AC32PC |
| IC8 | 8-759-980-88 | s | IC 74ACT138PC |
| IC9 | 8-759-143-98 | s | IC UPD70320L-8 |
| IC10 | 8-759-980-98 | s | IC 74AC244PC |
| IC11 | 8-759-916-14 | s | IC SN74HC04N |
| IC12 | 8-759-916-29 | s | IC SN74HC74N |
| IC13 | 8-759-916-16 | s | IC MC74HC08AN |
| IC14 | 8-759-916-25 | s | IC SN74HC32N |
| IC15 | 8-752-806-91 | s | IC CXQ71054P |
| IC16 | 8-752-806-91 | s | IC CXQ71054P |
| IC17 | 8-752-806-91 | s | IC CXQ71054P |
| IC18 | 8-752-806-91 | s | IC CXQ71054P |
| IC19 | 8-759-938-68 | s | IC CXD1095Q |
| IC20 | 8-759-938-68 | s | IC CXD1095Q |
| IC21 | 8-759-032-79 | s | IC MC74HC14AN |
| IC22 | 8-759-921-10 | s | IC SN74HC86N |
| IC23 | 8-759-938-83 | s | IC CF77074NT |
| IC24 | 8-759-910-43 | s | IC CX23028 |
| IC25 | 8-759-917-38 | s | IC SN74HC4040N |
| IC101 | 8-752-033-89 | s | IC CXA1297P |
| IC102 | 8-752-033-89 | s | IC CXA1297P |
| IC103 | 8-752-033-89 | s | IC CXA1297P |
| IC104 | 8-752-033-89 | s | IC CXA1297P |
| IC105 | 8-752-033-89 | s | IC CXA1297P |
| IC106 | 8-752-033-89 | s | IC CXA1297P |
| IC107 | 8-752-033-89 | s | IC CXA1297P |
| IC108 | 8-752-033-89 | s | IC CXA1297P |
| IC109 | 8-759-103-19 | s | IC UPC319C |
| IC110 | 8-759-103-19 | s | IC UPC319C |
| IC111 | 8-759-007-19 | s | IC MC74HC4051N |
| IC112 | 8-759-231-58 | s | IC M5F7812L |
| IC113 | 8-759-245-86 | s | IC M5F7912L |
| IC114 | 8-759-007-21 | s | IC MC74HC4053N |
| IC115 | 8-759-103-19 | s | IC UPC319C |
| IC116 | 8-759-916-12 | s | IC SN74HC00N |
| IC117 | 8-759-916-29 | s | IC SN74HC74N |

(AU-109 BOARD)

| Ref. No. or Q'ty | Part No. | SP | Description |
|---|---|---|---|
| IC118 | 8-759-231-53 | s | IC M5F7805L |
| IC119 | 8-759-245-79 | s | IC M5F7905L |
| IC201 | 8-752-033-89 | s | IC CXA1297P |
| IC202 | 8-752-033-89 | s | IC CXA1297P |
| IC203 | 8-752-033-89 | s | IC CXA1297P |
| IC204 | 8-752-033-89 | s | IC CXA1297P |
| IC205 | 8-752-033-89 | s | IC CXA1297P |
| IC206 | 8-752-033-89 | s | IC CXA1297P |
| IC207 | 8-752-033-89 | s | IC CXA1297P |
| IC208 | 8-752-033-89 | s | IC CXA1297P |
| IC209 | 8-759-103-19 | s | IC UPC319C |
| IC210 | 8-759-103-19 | s | IC UPC319C |
| IC211 | 8-759-007-19 | s | IC MC74HC4051N |
| IC212 | 8-759-231-58 | s | IC M5F7812L |
| IC213 | 8-759-245-86 | s | IC M5F7912L |
| IC301 | 8-752-033-89 | s | IC CXA1297P |
| IC302 | 8-752-033-89 | s | IC CXA1297P |
| IC303 | 8-752-033-89 | s | IC CXA1297P |
| IC304 | 8-752-033-89 | s | IC CXA1297P |
| IC305 | 8-752-033-89 | s | IC CXA1297P |
| IC306 | 8-752-033-89 | s | IC CXA1297P |
| IC307 | 8-752-033-89 | s | IC CXA1297P |
| IC308 | 8-752-033-89 | s | IC CXA1297P |
| IC309 | 8-759-103-19 | s | IC UPC319C |
| IC310 | 8-759-103-19 | s | IC UPC319C |
| IC311 | 8-759-007-19 | s | IC MC74HC4051N |
| IC312 | 8-759-231-58 | s | IC M5F7812L |
| IC313 | 8-759-245-86 | s | IC M5F7912L |
| IC314 | 8-759-007-21 | s | IC MC74HC4053N |
| IC315 | 8-759-103-19 | s | IC UPC319C |
| IC316 | 8-759-916-12 | s | IC SN74HC00N |
| IC317 | 8-759-916-29 | s | IC SN74HC74N |
| IC401 | 8-752-033-89 | s | IC CXA1297P |
| IC402 | 8-752-033-89 | s | IC CXA1297P |
| IC403 | 8-752-033-89 | s | IC CXA1297P |
| IC404 | 8-752-033-89 | s | IC CXA1297P |
| IC405 | 8-752-033-89 | s | IC CXA1297P |
| IC406 | 8-752-033-89 | s | IC CXA1297P |
| IC407 | 8-752-033-89 | s | IC CXA1297P |
| IC408 | 8-752-033-89 | s | IC CXA1297P |
| IC409 | 8-759-103-19 | s | IC UPC319C |
| IC410 | 8-759-103-19 | s | IC UPC319C |
| IC411 | 8-759-007-19 | s | IC MC74HC4051N |
| IC412 | 8-759-231-58 | s | IC M5F7812L |
| IC413 | 8-759-245-86 | s | IC M5F7912L |
| IC501 | 8-752-033-89 | s | IC CXA1297P |
| IC502 | 8-752-033-89 | s | IC CXA1297P |
| IC503 | 8-752-033-89 | s | IC CXA1297P |
| IC504 | 8-752-033-89 | s | IC CXA1297P |
| IC505 | 8-752-033-89 | s | IC CXA1297P |
| IC506 | 8-752-033-89 | s | IC CXA1297P |
| IC507 | 8-752-033-89 | s | IC CXA1297P |
| IC508 | 8-752-033-89 | s | IC CXA1297P |
| IC509 | 8-759-103-19 | s | IC UPC319C |
| IC510 | 8-759-103-19 | s | IC UPC319C |
| IC511 | 8-759-007-19 | s | IC MC74HC4051N |
| IC512 | 8-759-231-58 | s | IC M5F7812L |
| IC513 | 8-759-245-86 | s | IC M5F7912L |
| IC514 | 8-759-007-21 | s | IC MC74HC4053N |

(AU-109 BOARD)

| Ref. No. or Q'ty | Part No. | SP | Description |
|---|---|---|---|
| IC515 | 8-759-103-19 | s | IC UPC319C |
| IC516 | 8-759-916-12 | s | IC SN74HC00N |
| IC517 | 8-759-916-29 | s | IC SN74HC74N |
| IC601 | 8-752-033-89 | s | IC CXA1297P |
| IC602 | 8-752-033-89 | s | IC CXA1297P |
| IC603 | 8-752-033-89 | s | IC CXA1297P |
| IC604 | 8-752-033-89 | s | IC CXA1297P |
| IC605 | 8-752-033-89 | s | IC CXA1297P |
| IC606 | 8-752-033-89 | s | IC CXA1297P |
| IC607 | 8-752-033-89 | s | IC CXA1297P |
| IC608 | 8-752-033-89 | s | IC CXA1297P |
| IC609 | 8-759-103-19 | s | IC UPC319C |
| IC610 | 8-759-103-19 | s | IC UPC319C |
| IC611 | 8-759-007-19 | s | IC MC74HC4051N |
| IC612 | 8-759-231-58 | s | IC M5F7812L |
| IC613 | 8-759-245-86 | s | IC M5F7912L |
| IC701 | 8-752-033-89 | s | IC CXA1297P |
| IC702 | 8-752-033-89 | s | IC CXA1297P |
| IC703 | 8-752-033-89 | s | IC CXA1297P |
| IC704 | 8-752-033-89 | s | IC CXA1297P |
| IC705 | 8-752-033-89 | s | IC CXA1297P |
| IC706 | 8-752-033-89 | s | IC CXA1297P |
| IC707 | 8-752-033-89 | s | IC CXA1297P |
| IC708 | 8-752-033-89 | s | IC CXA1297P |
| IC709 | 8-759-103-19 | s | IC UPC319C |
| IC710 | 8-759-103-19 | s | IC UPC319C |
| IC711 | 8-759-007-19 | s | IC MC74HC4051N |
| IC712 | 8-759-231-58 | s | IC M5F7812L |
| IC713 | 8-759-245-86 | s | IC M5F7912L |
| IC714 | 8-759-007-21 | s | IC MC74HC4053N |
| IC715 | 8-759-103-19 | s | IC UPC319C |
| IC716 | 8-759-916-12 | s | IC SN74HC00N |
| IC717 | 8-759-916-29 | s | IC SN74HC74N |
| IC801 | 8-752-033-89 | s | IC CXA1297P |
| IC802 | 8-752-033-89 | s | IC CXA1297P |
| IC803 | 8-752-033-89 | s | IC CXA1297P |
| IC804 | 8-752-033-89 | s | IC CXA1297P |
| IC805 | 8-752-033-89 | s | IC CXA1297P |
| IC806 | 8-752-033-89 | s | IC CXA1297P |
| IC807 | 8-752-033-89 | s | IC CXA1297P |
| IC808 | 8-752-033-89 | s | IC CXA1297P |
| IC809 | 8-759-103-19 | s | IC UPC319C |
| IC810 | 8-759-103-19 | s | IC UPC319C |
| IC811 | 8-759-007-19 | s | IC MC74HC4051N |
| IC812 | 8-759-231-58 | s | IC M5F7812L |
| IC813 | 8-759-245-86 | s | IC M5F7912L |
| IC901 | 8-759-916-14 | s | IC SN74HC04N |
| IC902 | 8-759-700-40 | s | IC NJM4560S |
| IC903 | 8-759-517-45 | s | IC VFC320BM |
| IC904 | 8-759-517-45 | s | IC VFC320BM |
| IC905 | 8-759-007-09 | s | IC MC74HC540N |
| IC906 | 8-759-982-27 | s | IC RC78L15A |
| IC907 | 8-759-982-49 | s | IC RC79L15A |
| IC908 | 8-759-700-40 | s | IC NJM4560S |
| IC909 | 8-759-602-48 | s | IC M5201L |
| IC910 | 8-759-916-50 | s | IC SN74HC157N |
| IC911 | 8-759-000-01 | s | IC MC74HC4538N |
| IC912 | 8-759-710-48 | s | IC NJM2082S |
| IC913 | 8-759-710-48 | s | IC NJM2082S |

(AU-109 BOARD)

| Ref. No. or Q'ty | Part No. | SP | Description |
|---|---|---|---|
| IC914 | 8-759-007-21 | s | IC MC74HC4053N |
| IC915 | 8-759-710-48 | s | IC NJM2082S |
| IC916 | 8-759-900-59 | s | IC HI1-0201-5 |
| IC917 | 8-759-710-48 | s | IC NJM2082S |
| IC918 | 8-759-602-48 | s | IC M5201L |
| IC919 | 8-759-700-40 | s | IC NJM4560S |
| IC920 | 8-759-700-40 | s | IC NJM4560S |
| IC921 | 8-759-700-40 | s | IC NJM4560S |
| IC922 | 8-759-602-48 | s | IC M5201L |
| IC923 | 8-759-602-48 | s | IC M5201L |
| IC924 | 8-759-921-08 | s | IC SN74HC02N |
| IC925 | 8-759-700-40 | s | IC NJM4560S |
| IC926 | 8-759-103-19 | s | IC UPC319C |
| IC927 | 8-759-921-21 | s | IC SN74HC163N |
| IC928 | 8-759-921-21 | s | IC SN74HC163N |
| IC929 | 8-759-921-21 | s | IC SN74HC163N |
| IC930 | 8-759-971-33 | s | IC MB81C68A-25P |
| IC931 | 8-759-007-21 | s | IC MC74HC4053N |
| IC932 | 8-759-916-30 | s | IC SN74HC75N |
| IC933 | 8-759-916-48 | s | IC SN74HC151N |
| IC934 | 8-759-916-48 | s | IC SN74HC151N |
| IC935 | 8-759-938-68 | s | IC CXD1095Q |
| IC936 | 8-759-916-25 | s | IC SN74HC32N |
| IC937 | 8-759-231-59 | s | IC M5F7815L |
| IC938 | 8-759-245-87 | s | IC M5F7915L |
| IC939 | 8-759-708-05 | s | IC NJM78L05A |
| IC940 | 8-759-700-65 | s | IC NJM79L05A |
| IC941 | 8-759-900-59 | s | IC HI1-0201-5 |
| IC943 | 8-759-908-15 | s | IC TL431CLP |
| IC944 | 8-759-000-01 | s | IC MC74HC4538N |
| IC945 | 8-759-602-48 | s | IC M5201L |
| IC946 | 8-759-982-27 | s | IC RC78L15A |
| IC947 | 8-759-708-05 | s | IC NJM78L05A |
| IC948 | 8-759-708-05 | s | IC NJM78L05A |
| IC949 | 8-759-708-05 | s | IC NJM78L05A |
| L901 | 1-421-370-00 | s | COIL, CHOKE |
| L902 | 1-421-370-00 | s | COIL, CHOKE |
| L903 | 1-421-370-00 | s | COIL, CHOKE |
| LPF901 | 1-464-764-11 | s | FILTER, LOW-PASS |
| LPF902 | 1-464-764-11 | s | FILTER, LOW-PASS |
| Q1 | 8-729-900-89 | s | TRANSISTOR DTC144ES |
| Q2 | 8-729-900-89 | s | TRANSISTOR DTC144ES |
| Q4 | 8-729-900-89 | s | TRANSISTOR DTC144ES |
| Q901 | 8-729-900-89 | s | TRANSISTOR DTC144ES |
| Q902 | 8-729-620-02 | s | TRANSISTOR 2SA1115-EF |
| Q903 | 8-729-620-02 | s | TRANSISTOR 2SA1115-EF |
| Q904 | 8-729-203-49 | s | TRANSISTOR 2SC3327-B |
| Q905 | 8-729-620-02 | s | TRANSISTOR 2SA1115-EF |
| Q906 | 8-729-900-89 | s | TRANSISTOR DTC144ES |
| Q907 | 8-729-900-89 | s | TRANSISTOR DTC144ES |
| Q908 | 8-729-203-49 | s | TRANSISTOR 2SC3327-B |
| R1 | 1-215-437-00 | s | METAL 4.7K 1% 1/6W |
| R2 | 1-215-437-00 | s | METAL 4.7K 1% 1/6W |
| R3 | 1-215-445-00 | s | METAL 10K 1% 1/6W |
| R4 | 1-215-437-00 | s | METAL 4.7K 1% 1/6W |
| R5 | 1-215-437-00 | s | METAL 4.7K 1% 1/6W |
| R6 | 1-215-433-00 | s | METAL 3.3K 1% 1/6W |

(AU-109 BOARD)

| Ref. No. or Q'ty | Part No. | SP | Description |
|---|---|---|---|
| R7 | 1-215-445-00 | s | METAL 10K 1% 1/6W |
| R8 | 1-215-445-00 | s | METAL 10K 1% 1/6W |
| R9 | 1-215-445-00 | s | METAL 10K 1% 1/6W |
| R10 | 1-215-433-00 | s | METAL 3.3K 1% 1/6W |
| R11 | 1-215-428-00 | s | METAL 2K 1% 1/6W |
| R12 | 1-215-445-00 | s | METAL 10K 1% 1/6W |
| R13 | 1-215-445-00 | s | METAL 10K 1% 1/6W |
| R14 | 1-215-445-00 | s | METAL 10K 1% 1/6W |
| R15 | 1-215-445-00 | s | METAL 10K 1% 1/6W |
| R16 | 1-215-445-00 | s | METAL 10K 1% 1/6W |
| R17 | 1-215-445-00 | s | METAL 10K 1% 1/6W |
| R101 | 1-215-437-00 | s | METAL 4.7K 1% 1/6W |
| R102 | 1-215-429-00 | s | METAL 2.2K 1% 1/6W |
| R103 | 1-215-429-00 | s | METAL 2.2K 1% 1/6W |
| R104 | 1-215-429-00 | s | METAL 2.2K 1% 1/6W |
| R105 | 1-215-430-00 | s | METAL 2.4K 1% 1/6W |
| R106 | 1-215-423-00 | s | METAL 1.2K 1% 1/6W |
| R107 | 1-215-423-00 | s | METAL 1.2K 1% 1/6W |
| R108 | 1-215-423-00 | s | METAL 1.2K 1% 1/6W |
| R109 | 1-215-423-00 | s | METAL 1.2K 1% 1/6W |
| R110 | 1-215-427-00 | s | METAL 1.8K 1% 1/6W |
| R111 | 1-215-423-00 | s | METAL 1.2K 1% 1/6W |
| R112 | 1-215-434-00 | s | METAL 3.6K 1% 1/6W |
| R113 | 1-215-430-00 | s | METAL 2.4K 1% 1/6W |
| R114 | 1-215-423-00 | s | METAL 1.2K 1% 1/6W |
| R115 | 1-215-423-00 | s | METAL 1.2K 1% 1/6W |
| R116 | 1-215-423-00 | s | METAL 1.2K 1% 1/6W |
| R117 | 1-215-423-00 | s | METAL 1.2K 1% 1/6W |
| R118 | 1-215-427-00 | s | METAL 1.8K 1% 1/6W |
| R119 | 1-215-423-00 | s | METAL 1.2K 1% 1/6W |
| R120 | 1-215-434-00 | s | METAL 3.6K 1% 1/6W |
| R121 | 1-215-449-00 | s | METAL 15K 1% 1/6W |
| R122 | 1-215-428-00 | s | METAL 2K 1% 1/6W |
| R123 | 1-215-449-00 | s | METAL 15K 1% 1/6W |
| R124 | 1-215-437-00 | s | METAL 4.7K 1% 1/6W |
| R125 | 1-215-397-00 | s | METAL 100 1% 1/6W |
| R126 | 1-215-437-00 | s | METAL 4.7K 1% 1/6W |
| R127 | 1-215-429-00 | s | METAL 2.2K 1% 1/6W |
| R128 | 1-215-429-00 | s | METAL 2.2K 1% 1/6W |
| R129 | 1-215-429-00 | s | METAL 2.2K 1% 1/6W |
| R130 | 1-215-430-00 | s | METAL 2.4K 1% 1/6W |
| R131 | 1-215-423-00 | s | METAL 1.2K 1% 1/6W |
| R132 | 1-215-423-00 | s | METAL 1.2K 1% 1/6W |
| R133 | 1-215-423-00 | s | METAL 1.2K 1% 1/6W |
| R134 | 1-215-423-00 | s | METAL 1.2K 1% 1/6W |
| R135 | 1-215-427-00 | s | METAL 1.8K 1% 1/6W |
| R136 | 1-215-423-00 | s | METAL 1.2K 1% 1/6W |
| R137 | 1-215-434-00 | s | METAL 3.6K 1% 1/6W |
| R138 | 1-215-430-00 | s | METAL 2.4K 1% 1/6W |
| R139 | 1-215-423-00 | s | METAL 1.2K 1% 1/6W |
| R140 | 1-215-423-00 | s | METAL 1.2K 1% 1/6W |
| R141 | 1-215-423-00 | s | METAL 1.2K 1% 1/6W |
| R142 | 1-215-423-00 | s | METAL 1.2K 1% 1/6W |
| R143 | 1-215-427-00 | s | METAL 1.8K 1% 1/6W |
| R144 | 1-215-423-00 | s | METAL 1.2K 1% 1/6W |
| R145 | 1-215-434-00 | s | METAL 3.6K 1% 1/6W |
| R146 | 1-215-449-00 | s | METAL 15K 1% 1/6W |
| R147 | 1-215-428-00 | s | METAL 2K 1% 1/6W |
| R148 | 1-215-449-00 | s | METAL 15K 1% 1/6W |

(AU-109 BOARD)

| Ref. No. or Q'ty | Part No. | SP | Description |
|---|---|---|---|
| R149 | 1-215-437-00 | s | METAL 4.7K 1% 1/6W |
| R150 | 1-215-397-00 | s | METAL 100 1% 1/6W |
| R151 | 1-215-445-00 | s | METAL 10K 1% 1/6W |
| R152 | 1-215-417-00 | s | METAL 680 1% 1/6W |
| R153 | 1-215-424-00 | s | METAL 1.3K 1% 1/6W |
| R154 | 1-215-435-00 | s | METAL 3.9K 1% 1/6W |
| R155 | 1-215-435-00 | s | METAL 3.9K 1% 1/6W |
| R156 | 1-215-437-00 | s | METAL 4.7K 1% 1/6W |
| R157 | 1-215-437-00 | s | METAL 4.7K 1% 1/6W |
| R158 | 1-215-445-00 | s | METAL 10K 1% 1/6W |
| R159 | 1-215-433-00 | s | METAL 3.3K 1% 1/6W |
| R160 | 1-215-445-00 | s | METAL 10K 1% 1/6W |
| R161 | 1-215-433-00 | s | METAL 3.3K 1% 1/6W |
| R162 | 1-215-421-00 | s | METAL 1K 1% 1/6W |
| R163 | 1-215-437-00 | s | METAL 4.7K 1% 1/6W |
| R164 | 1-215-445-00 | s | METAL 10K 1% 1/6W |
| R165 | 1-215-453-00 | s | METAL 22K 1% 1/6W |
| R166 | 1-215-453-00 | s | METAL 22K 1% 1/6W |
| R167 | 1-215-463-00 | s | METAL 56K 1% 1/6W |
| R168 | 1-215-429-00 | s | METAL 2.2K 1% 1/6W |
| R201 | 1-215-437-00 | s | METAL 4.7K 1% 1/6W |
| R202 | 1-215-429-00 | s | METAL 2.2K 1% 1/6W |
| R203 | 1-215-429-00 | s | METAL 2.2K 1% 1/6W |
| R204 | 1-215-429-00 | s | METAL 2.2K 1% 1/6W |
| R205 | 1-215-430-00 | s | METAL 2.4K 1% 1/6W |
| R206 | 1-215-423-00 | s | METAL 1.2K 1% 1/6W |
| R207 | 1-215-423-00 | s | METAL 1.2K 1% 1/6W |
| R208 | 1-215-423-00 | s | METAL 1.2K 1% 1/6W |
| R209 | 1-215-423-00 | s | METAL 1.2K 1% 1/6W |
| R210 | 1-215-427-00 | s | METAL 1.8K 1% 1/6W |
| R211 | 1-215-423-00 | s | METAL 1.2K 1% 1/6W |
| R212 | 1-215-434-00 | s | METAL 3.6K 1% 1/6W |
| R213 | 1-215-430-00 | s | METAL 2.4K 1% 1/6W |
| R214 | 1-215-423-00 | s | METAL 1.2K 1% 1/6W |
| R215 | 1-215-423-00 | s | METAL 1.2K 1% 1/6W |
| R216 | 1-215-423-00 | s | METAL 1.2K 1% 1/6W |
| R217 | 1-215-423-00 | s | METAL 1.2K 1% 1/6W |
| R218 | 1-215-427-00 | s | METAL 1.8K 1% 1/6W |
| R219 | 1-215-423-00 | s | METAL 1.2K 1% 1/6W |
| R220 | 1-215-434-00 | s | METAL 3.6K 1% 1/6W |
| R221 | 1-215-449-00 | s | METAL 15K 1% 1/6W |
| R222 | 1-215-428-00 | s | METAL 2K 1% 1/6W |
| R223 | 1-215-449-00 | s | METAL 15K 1% 1/6W |
| R224 | 1-215-437-00 | s | METAL 4.7K 1% 1/6W |
| R225 | 1-215-397-00 | s | METAL 100 1% 1/6W |
| R226 | 1-215-437-00 | s | METAL 4.7K 1% 1/6W |
| R227 | 1-215-429-00 | s | METAL 2.2K 1% 1/6W |
| R228 | 1-215-429-00 | s | METAL 2.2K 1% 1/6W |
| R229 | 1-215-429-00 | s | METAL 2.2K 1% 1/6W |
| R230 | 1-215-430-00 | s | METAL 2.4K 1% 1/6W |
| R231 | 1-215-423-00 | s | METAL 1.2K 1% 1/6W |
| R232 | 1-215-423-00 | s | METAL 1.2K 1% 1/6W |
| R233 | 1-215-423-00 | s | METAL 1.2K 1% 1/6W |
| R234 | 1-215-423-00 | s | METAL 1.2K 1% 1/6W |
| R235 | 1-215-427-00 | s | METAL 1.8K 1% 1/6W |
| R236 | 1-215-423-00 | s | METAL 1.2K 1% 1/6W |
| R237 | 1-215-434-00 | s | METAL 3.6K 1% 1/6W |
| R238 | 1-215-430-00 | s | METAL 2.4K 1% 1/6W |
| R239 | 1-215-423-00 | s | METAL 1.2K 1% 1/6W |

(AU-109 BOARD)

| Ref. No. or Q'ty | Part No. | SP | Description |
|---|---|---|---|
| R240 | 1-215-423-00 | s | METAL 1.2K 1% 1/6W |
| R241 | 1-215-423-00 | s | METAL 1.2K 1% 1/6W |
| R242 | 1-215-423-00 | s | METAL 1.2K 1% 1/6W |
| R243 | 1-215-427-00 | s | METAL 1.8K 1% 1/6W |
| R244 | 1-215-423-00 | s | METAL 1.2K 1% 1/6W |
| R245 | 1-215-434-00 | s | METAL 3.6K 1% 1/6W |
| R246 | 1-215-449-00 | s | METAL 15K 1% 1/6W |
| R247 | 1-215-428-00 | s | METAL 2K 1% 1/6W |
| R248 | 1-215-449-00 | s | METAL 15K 1% 1/6W |
| R249 | 1-215-437-00 | s | METAL 4.7K 1% 1/6W |
| R250 | 1-215-397-00 | s | METAL 100 1% 1/6W |
| R251 | 1-215-445-00 | s | METAL 10K 1% 1/6W |
| R252 | 1-215-417-00 | s | METAL 680 1% 1/6W |
| R253 | 1-215-424-00 | s | METAL 1.3K 1% 1/6W |
| R254 | 1-215-435-00 | s | METAL 3.9K 1% 1/6W |
| R255 | 1-215-435-00 | s | METAL 3.9K 1% 1/6W |
| R256 | 1-215-437-00 | s | METAL 4.7K 1% 1/6W |
| R257 | 1-215-437-00 | s | METAL 4.7K 1% 1/6W |
| R258 | 1-215-445-00 | s | METAL 10K 1% 1/6W |
| R259 | 1-215-433-00 | s | METAL 3.3K 1% 1/6W |
| R260 | 1-215-445-00 | s | METAL 10K 1% 1/6W |
| R261 | 1-215-433-00 | s | METAL 3.3K 1% 1/6W |
| R262 | 1-215-421-00 | s | METAL 1K 1% 1/6W |
| R263 | 1-215-437-00 | s | METAL 4.7K 1% 1/6W |
| R264 | 1-215-445-00 | s | METAL 10K 1% 1/6W |
| R265 | 1-215-453-00 | s | METAL 22K 1% 1/6W |
| R266 | 1-215-453-00 | s | METAL 22K 1% 1/6W |
| R267 | 1-215-463-00 | s | METAL 56K 1% 1/6W |
| R268 | 1-215-429-00 | s | METAL 2.2K 1% 1/6W |
| R301 | 1-215-437-00 | s | METAL 4.7K 1% 1/6W |
| R302 | 1-215-429-00 | s | METAL 2.2K 1% 1/6W |
| R303 | 1-215-429-00 | s | METAL 2.2K 1% 1/6W |
| R304 | 1-215-429-00 | s | METAL 2.2K 1% 1/6W |
| R305 | 1-215-430-00 | s | METAL 2.4K 1% 1/6W |
| R306 | 1-215-423-00 | s | METAL 1.2K 1% 1/6W |
| R307 | 1-215-423-00 | s | METAL 1.2K 1% 1/6W |
| R308 | 1-215-423-00 | s | METAL 1.2K 1% 1/6W |
| R309 | 1-215-423-00 | s | METAL 1.2K 1% 1/6W |
| R310 | 1-215-427-00 | s | METAL 1.8K 1% 1/6W |
| R311 | 1-215-423-00 | s | METAL 1.2K 1% 1/6W |
| R312 | 1-215-434-00 | s | METAL 3.6K 1% 1/6W |
| R313 | 1-215-430-00 | s | METAL 2.4K 1% 1/6W |
| R314 | 1-215-423-00 | s | METAL 1.2K 1% 1/6W |
| R315 | 1-215-423-00 | s | METAL 1.2K 1% 1/6W |
| R316 | 1-215-423-00 | s | METAL 1.2K 1% 1/6W |
| R317 | 1-215-423-00 | s | METAL 1.2K 1% 1/6W |
| R318 | 1-215-427-00 | s | METAL 1.8K 1% 1/6W |
| R319 | 1-215-423-00 | s | METAL 1.2K 1% 1/6W |
| R320 | 1-215-434-00 | s | METAL 3.6K 1% 1/6W |
| R321 | 1-215-449-00 | s | METAL 15K 1% 1/6W |
| R322 | 1-215-428-00 | s | METAL 2K 1% 1/6W |
| R323 | 1-215-449-00 | s | METAL 15K 1% 1/6W |
| R324 | 1-215-437-00 | s | METAL 4.7K 1% 1/6W |
| R325 | 1-215-397-00 | s | METAL 100 1% 1/6W |
| R326 | 1-215-437-00 | s | METAL 4.7K 1% 1/6W |
| R327 | 1-215-429-00 | s | METAL 2.2K 1% 1/6W |
| R328 | 1-215-429-00 | s | METAL 2.2K 1% 1/6W |
| R329 | 1-215-429-00 | s | METAL 2.2K 1% 1/6W |
| R330 | 1-215-430-00 | s | METAL 2.4K 1% 1/6W |

(AU-109 BOARD)

| Ref. No. or Q'ty | Part No. | SP | Description |
|---|---|---|---|
| R331 | 1-215-423-00 | s | METAL 1.2K 1% 1/6W |
| R332 | 1-215-423-00 | s | METAL 1.2K 1% 1/6W |
| R333 | 1-215-423-00 | s | METAL 1.2K 1% 1/6W |
| R334 | 1-215-423-00 | s | METAL 1.2K 1% 1/6W |
| R335 | 1-215-427-00 | s | METAL 1.8K 1% 1/6W |
| R336 | 1-215-423-00 | s | METAL 1.2K 1% 1/6W |
| R337 | 1-215-434-00 | s | METAL 3.6K 1% 1/6W |
| R338 | 1-215-430-00 | s | METAL 2.4K 1% 1/6W |
| R339 | 1-215-423-00 | s | METAL 1.2K 1% 1/6W |
| R340 | 1-215-423-00 | s | METAL 1.2K 1% 1/6W |
| R341 | 1-215-423-00 | s | METAL 1.2K 1% 1/6W |
| R342 | 1-215-423-00 | s | METAL 1.2K 1% 1/6W |
| R343 | 1-215-427-00 | s | METAL 1.8K 1% 1/6W |
| R344 | 1-215-423-00 | s | METAL 1.2K 1% 1/6W |
| R345 | 1-215-434-00 | s | METAL 3.6K 1% 1/6W |
| R346 | 1-215-449-00 | s | METAL 15K 1% 1/6W |
| R347 | 1-215-428-00 | s | METAL 2K 1% 1/6W |
| R348 | 1-215-449-00 | s | METAL 15K 1% 1/6W |
| R349 | 1-215-437-00 | s | METAL 4.7K 1% 1/6W |
| R350 | 1-215-397-00 | s | METAL 100 1% 1/6W |
| R351 | 1-215-445-00 | s | METAL 10K 1% 1/6W |
| R352 | 1-215-417-00 | s | METAL 680 1% 1/6W |
| R353 | 1-215-424-00 | s | METAL 1.3K 1% 1/6W |
| R354 | 1-215-435-00 | s | METAL 3.9K 1% 1/6W |
| R355 | 1-215-435-00 | s | METAL 3.9K 1% 1/6W |
| R356 | 1-215-437-00 | s | METAL 4.7K 1% 1/6W |
| R357 | 1-215-437-00 | s | METAL 4.7K 1% 1/6W |
| R358 | 1-215-445-00 | s | METAL 10K 1% 1/6W |
| R359 | 1-215-433-00 | s | METAL 3.3K 1% 1/6W |
| R360 | 1-215-445-00 | s | METAL 10K 1% 1/6W |
| R361 | 1-215-433-00 | s | METAL 3.3K 1% 1/6W |
| R362 | 1-215-421-00 | s | METAL 1K 1% 1/6W |
| R363 | 1-215-437-00 | s | METAL 4.7K 1% 1/6W |
| R364 | 1-215-445-00 | s | METAL 10K 1% 1/6W |
| R365 | 1-215-453-00 | s | METAL 22K 1% 1/6W |
| R366 | 1-215-453-00 | s | METAL 22K 1% 1/6W |
| R367 | 1-215-463-00 | s | METAL 56K 1% 1/6W |
| R368 | 1-215-429-00 | s | METAL 2.2K 1% 1/6W |
| R401 | 1-215-437-00 | s | METAL 4.7K 1% 1/6W |
| R402 | 1-215-429-00 | s | METAL 2.2K 1% 1/6W |
| R403 | 1-215-429-00 | s | METAL 2.2K 1% 1/6W |
| R404 | 1-215-429-00 | s | METAL 2.2K 1% 1/6W |
| R405 | 1-215-430-00 | s | METAL 2.4K 1% 1/6W |
| R406 | 1-215-423-00 | s | METAL 1.2K 1% 1/6W |
| R407 | 1-215-423-00 | s | METAL 1.2K 1% 1/6W |
| R408 | 1-215-423-00 | s | METAL 1.2K 1% 1/6W |
| R409 | 1-215-423-00 | s | METAL 1.2K 1% 1/6W |
| R410 | 1-215-427-00 | s | METAL 1.8K 1% 1/6W |
| R411 | 1-215-423-00 | s | METAL 1.2K 1% 1/6W |
| R412 | 1-215-434-00 | s | METAL 3.6K 1% 1/6W |
| R413 | 1-215-430-00 | s | METAL 2.4K 1% 1/6W |
| R414 | 1-215-423-00 | s | METAL 1.2K 1% 1/6W |
| R415 | 1-215-423-00 | s | METAL 1.2K 1% 1/6W |
| R416 | 1-215-423-00 | s | METAL 1.2K 1% 1/6W |
| R417 | 1-215-423-00 | s | METAL 1.2K 1% 1/6W |
| R418 | 1-215-427-00 | s | METAL 1.8K 1% 1/6W |
| R419 | 1-215-423-00 | s | METAL 1.2K 1% 1/6W |
| R420 | 1-215-434-00 | s | METAL 3.6K 1% 1/6W |
| R421 | 1-215-449-00 | s | METAL 15K 1% 1/6W |

(AU-109 BOARD)

| Ref. No. or Q'ty | Part No. | SP | Description |
|---|---|---|---|
| R422 | 1-215-428-00 | s | METAL 2K 1% 1/6W |
| R423 | 1-215-449-00 | s | METAL 15K 1% 1/6W |
| R424 | 1-215-437-00 | s | METAL 4.7K 1% 1/6W |
| R425 | 1-215-397-00 | s | METAL 100 1% 1/6W |
| R426 | 1-215-437-00 | s | METAL 4.7K 1% 1/6W |
| R427 | 1-215-429-00 | s | METAL 2.2K 1% 1/6W |
| R428 | 1-215-429-00 | s | METAL 2.2K 1% 1/6W |
| R429 | 1-215-429-00 | s | METAL 2.2K 1% 1/6W |
| R430 | 1-215-430-00 | s | METAL 2.4K 1% 1/6W |
| R431 | 1-215-423-00 | s | METAL 1.2K 1% 1/6W |
| R432 | 1-215-423-00 | s | METAL 1.2K 1% 1/6W |
| R433 | 1-215-423-00 | s | METAL 1.2K 1% 1/6W |
| R434 | 1-215-423-00 | s | METAL 1.2K 1% 1/6W |
| R435 | 1-215-427-00 | s | METAL 1.8K 1% 1/6W |
| R436 | 1-215-423-00 | s | METAL 1.2K 1% 1/6W |
| R437 | 1-215-434-00 | s | METAL 3.6K 1% 1/6W |
| R438 | 1-215-430-00 | s | METAL 2.4K 1% 1/6W |
| R439 | 1-215-423-00 | s | METAL 1.2K 1% 1/6W |
| R440 | 1-215-423-00 | s | METAL 1.2K 1% 1/6W |
| R441 | 1-215-423-00 | s | METAL 1.2K 1% 1/6W |
| R442 | 1-215-423-00 | s | METAL 1.2K 1% 1/6W |
| R443 | 1-215-427-00 | s | METAL 1.8K 1% 1/6W |
| R444 | 1-215-423-00 | s | METAL 1.2K 1% 1/6W |
| R445 | 1-215-434-00 | s | METAL 3.6K 1% 1/6W |
| R446 | 1-215-449-00 | s | METAL 15K 1% 1/6W |
| R447 | 1-215-428-00 | s | METAL 2K 1% 1/6W |
| R448 | 1-215-449-00 | s | METAL 15K 1% 1/6W |
| R449 | 1-215-437-00 | s | METAL 4.7K 1% 1/6W |
| R450 | 1-215-397-00 | s | METAL 100 1% 1/6W |
| R451 | 1-215-445-00 | s | METAL 10K 1% 1/6W |
| R452 | 1-215-417-00 | s | METAL 680 1% 1/6W |
| R453 | 1-215-424-00 | s | METAL 1.3K 1% 1/6W |
| R454 | 1-215-435-00 | s | METAL 3.9K 1% 1/6W |
| R455 | 1-215-435-00 | s | METAL 3.9K 1% 1/6W |
| R456 | 1-215-437-00 | s | METAL 4.7K 1% 1/6W |
| R457 | 1-215-437-00 | s | METAL 4.7K 1% 1/6W |
| R458 | 1-215-445-00 | s | METAL 10K 1% 1/6W |
| R459 | 1-215-433-00 | s | METAL 3.3K 1% 1/6W |
| R460 | 1-215-445-00 | s | METAL 10K 1% 1/6W |
| R461 | 1-215-433-00 | s | METAL 3.3K 1% 1/6W |
| R462 | 1-215-421-00 | s | METAL 1K 1% 1/6W |
| R463 | 1-215-437-00 | s | METAL 4.7K 1% 1/6W |
| R464 | 1-215-445-00 | s | METAL 10K 1% 1/6W |
| R465 | 1-215-453-00 | s | METAL 22K 1% 1/6W |
| R466 | 1-215-453-00 | s | METAL 22K 1% 1/6W |
| R467 | 1-215-463-00 | s | METAL 56K 1% 1/6W |
| R468 | 1-215-429-00 | s | METAL 2.2K 1% 1/6W |
| R501 | 1-215-437-00 | s | METAL 4.7K 1% 1/6W |
| R502 | 1-215-429-00 | s | METAL 2.2K 1% 1/6W |
| R503 | 1-215-429-00 | s | METAL 2.2K 1% 1/6W |
| R504 | 1-215-429-00 | s | METAL 2.2K 1% 1/6W |
| R505 | 1-215-430-00 | s | METAL 2.4K 1% 1/6W |
| R506 | 1-215-423-00 | s | METAL 1.2K 1% 1/6W |
| R507 | 1-215-423-00 | s | METAL 1.2K 1% 1/6W |
| R508 | 1-215-423-00 | s | METAL 1.2K 1% 1/6W |
| R509 | 1-215-423-00 | s | METAL 1.2K 1% 1/6W |
| R510 | 1-215-427-00 | s | METAL 1.8K 1% 1/6W |
| R511 | 1-215-423-00 | s | METAL 1.2K 1% 1/6W |
| R512 | 1-215-434-00 | s | METAL 3.6K 1% 1/6W |

(AU-109 BOARD)

| Ref. No. or Q'ty | Part No. | SP | Description |
|---|---|---|---|
| R513 | 1-215-430-00 | s | METAL 2.4K 1% 1/6W |
| R514 | 1-215-423-00 | s | METAL 1.2K 1% 1/6W |
| R515 | 1-215-423-00 | s | METAL 1.2K 1% 1/6W |
| R516 | 1-215-423-00 | s | METAL 1.2K 1% 1/6W |
| R517 | 1-215-423-00 | s | METAL 1.2K 1% 1/6W |
| R518 | 1-215-427-00 | s | METAL 1.8K 1% 1/6W |
| R519 | 1-215-423-00 | s | METAL 1.2K 1% 1/6W |
| R520 | 1-215-434-00 | s | METAL 3.6K 1% 1/6W |
| R521 | 1-215-449-00 | s | METAL 15K 1% 1/6W |
| R522 | 1-215-428-00 | s | METAL 2K 1% 1/6W |
| R523 | 1-215-449-00 | s | METAL 15K 1% 1/6W |
| R524 | 1-215-437-00 | s | METAL 4.7K 1% 1/6W |
| R525 | 1-215-397-00 | s | METAL 100 1% 1/6W |
| R526 | 1-215-437-00 | s | METAL 4.7K 1% 1/6W |
| R527 | 1-215-429-00 | s | METAL 2.2K 1% 1/6W |
| R528 | 1-215-429-00 | s | METAL 2.2K 1% 1/6W |
| R529 | 1-215-429-00 | s | METAL 2.2K 1% 1/6W |
| R530 | 1-215-430-00 | s | METAL 2.4K 1% 1/6W |
| R531 | 1-215-423-00 | s | METAL 1.2K 1% 1/6W |
| R532 | 1-215-423-00 | s | METAL 1.2K 1% 1/6W |
| R533 | 1-215-423-00 | s | METAL 1.2K 1% 1/6W |
| R534 | 1-215-423-00 | s | METAL 1.2K 1% 1/6W |
| R535 | 1-215-427-00 | s | METAL 1.8K 1% 1/6W |
| R536 | 1-215-423-00 | s | METAL 1.2K 1% 1/6W |
| R537 | 1-215-434-00 | s | METAL 3.6K 1% 1/6W |
| R538 | 1-215-430-00 | s | METAL 2.4K 1% 1/6W |
| R539 | 1-215-423-00 | s | METAL 1.2K 1% 1/6W |
| R540 | 1-215-423-00 | s | METAL 1.2K 1% 1/6W |
| R541 | 1-215-423-00 | s | METAL 1.2K 1% 1/6W |
| R542 | 1-215-423-00 | s | METAL 1.2K 1% 1/6W |
| R543 | 1-215-427-00 | s | METAL 1.8K 1% 1/6W |
| R544 | 1-215-423-00 | s | METAL 1.2K 1% 1/6W |
| R545 | 1-215-434-00 | s | METAL 3.6K 1% 1/6W |
| R546 | 1-215-449-00 | s | METAL 15K 1% 1/6W |
| R547 | 1-215-428-00 | s | METAL 2K 1% 1/6W |
| R548 | 1-215-449-00 | s | METAL 15K 1% 1/6W |
| R549 | 1-215-437-00 | s | METAL 4.7K 1% 1/6W |
| R550 | 1-215-397-00 | s | METAL 100 1% 1/6W |
| R551 | 1-215-445-00 | s | METAL 10K 1% 1/6W |
| R552 | 1-215-417-00 | s | METAL 680 1% 1/6W |
| R553 | 1-215-424-00 | s | METAL 1.3K 1% 1/6W |
| R554 | 1-215-435-00 | s | METAL 3.9K 1% 1/6W |
| R555 | 1-215-435-00 | s | METAL 3.9K 1% 1/6W |
| R556 | 1-215-437-00 | s | METAL 4.7K 1% 1/6W |
| R557 | 1-215-437-00 | s | METAL 4.7K 1% 1/6W |
| R558 | 1-215-445-00 | s | METAL 10K 1% 1/6W |
| R559 | 1-215-433-00 | s | METAL 3.3K 1% 1/6W |
| R560 | 1-215-445-00 | s | METAL 10K 1% 1/6W |
| R561 | 1-215-433-00 | s | METAL 3.3K 1% 1/6W |
| R562 | 1-215-421-00 | s | METAL 1K 1% 1/6W |
| R563 | 1-215-437-00 | s | METAL 4.7K 1% 1/6W |
| R564 | 1-215-445-00 | s | METAL 10K 1% 1/6W |
| R565 | 1-215-453-00 | s | METAL 22K 1% 1/6W |
| R566 | 1-215-453-00 | s | METAL 22K 1% 1/6W |
| R567 | 1-215-463-00 | s | METAL 56K 1% 1/6W |
| R568 | 1-215-429-00 | s | METAL 2.2K 1% 1/6W |
| R601 | 1-215-437-00 | s | METAL 4.7K 1% 1/6W |
| R602 | 1-215-429-00 | s | METAL 2.2K 1% 1/6W |
| R603 | 1-215-429-00 | s | METAL 2.2K 1% 1/6W |

(AU-109 BOARD)

| Ref. No. or Q'ty | Part No. | SP | Description |
|---|---|---|---|
| R604 | 1-215-429-00 | s | METAL 2.2K 1% 1/6W |
| R605 | 1-215-430-00 | s | METAL 2.4K 1% 1/6W |
| R606 | 1-215-423-00 | s | METAL 1.2K 1% 1/6W |
| R607 | 1-215-423-00 | s | METAL 1.2K 1% 1/6W |
| R608 | 1-215-423-00 | s | METAL 1.2K 1% 1/6W |
| R609 | 1-215-423-00 | s | METAL 1.2K 1% 1/6W |
| R610 | 1-215-427-00 | s | METAL 1.8K 1% 1/6W |
| R611 | 1-215-423-00 | s | METAL 1.2K 1% 1/6W |
| R612 | 1-215-434-00 | s | METAL 3.6K 1% 1/6W |
| R613 | 1-215-430-00 | s | METAL 2.4K 1% 1/6W |
| R614 | 1-215-423-00 | s | METAL 1.2K 1% 1/6W |
| R615 | 1-215-423-00 | s | METAL 1.2K 1% 1/6W |
| R616 | 1-215-423-00 | s | METAL 1.2K 1% 1/6W |
| R617 | 1-215-423-00 | s | METAL 1.2K 1% 1/6W |
| R618 | 1-215-427-00 | s | METAL 1.8K 1% 1/6W |
| R619 | 1-215-423-00 | s | METAL 1.2K 1% 1/6W |
| R620 | 1-215-434-00 | s | METAL 3.6K 1% 1/6W |
| R621 | 1-215-449-00 | s | METAL 15K 1% 1/6W |
| R622 | 1-215-428-00 | s | METAL 2K 1% 1/6W |
| R623 | 1-215-449-00 | s | METAL 15K 1% 1/6W |
| R624 | 1-215-437-00 | s | METAL 4.7K 1% 1/6W |
| R625 | 1-215-397-00 | s | METAL 100 1% 1/6W |
| R626 | 1-215-437-00 | s | METAL 4.7K 1% 1/6W |
| R627 | 1-215-429-00 | s | METAL 2.2K 1% 1/6W |
| R628 | 1-215-429-00 | s | METAL 2.2K 1% 1/6W |
| R629 | 1-215-429-00 | s | METAL 2.2K 1% 1/6W |
| R630 | 1-215-430-00 | s | METAL 2.4K 1% 1/6W |
| R631 | 1-215-423-00 | s | METAL 1.2K 1% 1/6W |
| R632 | 1-215-423-00 | s | METAL 1.2K 1% 1/6W |
| R633 | 1-215-423-00 | s | METAL 1.2K 1% 1/6W |
| R634 | 1-215-423-00 | s | METAL 1.2K 1% 1/6W |
| R635 | 1-215-427-00 | s | METAL 1.8K 1% 1/6W |
| R636 | 1-215-423-00 | s | METAL 1.2K 1% 1/6W |
| R637 | 1-215-434-00 | s | METAL 3.6K 1% 1/6W |
| R638 | 1-215-430-00 | s | METAL 2.4K 1% 1/6W |
| R639 | 1-215-423-00 | s | METAL 1.2K 1% 1/6W |
| R640 | 1-215-423-00 | s | METAL 1.2K 1% 1/6W |
| R641 | 1-215-423-00 | s | METAL 1.2K 1% 1/6W |
| R642 | 1-215-423-00 | s | METAL 1.2K 1% 1/6W |
| R643 | 1-215-427-00 | s | METAL 1.8K 1% 1/6W |
| R644 | 1-215-423-00 | s | METAL 1.2K 1% 1/6W |
| R645 | 1-215-434-00 | s | METAL 3.6K 1% 1/6W |
| R646 | 1-215-449-00 | s | METAL 15K 1% 1/6W |
| R647 | 1-215-428-00 | s | METAL 2K 1% 1/6W |
| R648 | 1-215-449-00 | s | METAL 15K 1% 1/6W |
| R649 | 1-215-437-00 | s | METAL 4.7K 1% 1/6W |
| R650 | 1-215-397-00 | s | METAL 100 1% 1/6W |
| R651 | 1-215-445-00 | s | METAL 10K 1% 1/6W |
| R652 | 1-215-417-00 | s | METAL 680 1% 1/6W |
| R653 | 1-215-424-00 | s | METAL 1.3K 1% 1/6W |
| R654 | 1-215-435-00 | s | METAL 3.9K 1% 1/6W |
| R655 | 1-215-435-00 | s | METAL 3.9K 1% 1/6W |
| R656 | 1-215-437-00 | s | METAL 4.7K 1% 1/6W |
| R657 | 1-215-437-00 | s | METAL 4.7K 1% 1/6W |
| R658 | 1-215-445-00 | s | METAL 10K 1% 1/6W |
| R659 | 1-215-433-00 | s | METAL 3.3K 1% 1/6W |
| R660 | 1-215-445-00 | s | METAL 10K 1% 1/6W |
| R661 | 1-215-433-00 | s | METAL 3.3K 1% 1/6W |
| R662 | 1-215-421-00 | s | METAL 1K 1% 1/6W |

(AU-109 BOARD)

| Ref. No. or Q'ty | Part No. | SP | Description |
|---|---|---|---|
| R663 | 1-215-437-00 | s | METAL 4.7K 1% 1/6W |
| R664 | 1-215-445-00 | s | METAL 10K 1% 1/6W |
| R665 | 1-215-453-00 | s | METAL 22K 1% 1/6W |
| R666 | 1-215-453-00 | s | METAL 22K 1% 1/6W |
| R667 | 1-215-463-00 | s | METAL 56K 1% 1/6W |
| R668 | 1-215-429-00 | s | METAL 2.2K 1% 1/6W |
| R701 | 1-215-437-00 | s | METAL 4.7K 1% 1/6W |
| R702 | 1-215-429-00 | s | METAL 2.2K 1% 1/6W |
| R703 | 1-215-429-00 | s | METAL 2.2K 1% 1/6W |
| R704 | 1-215-429-00 | s | METAL 2.2K 1% 1/6W |
| R705 | 1-215-430-00 | s | METAL 2.4K 1% 1/6W |
| R706 | 1-215-423-00 | s | METAL 1.2K 1% 1/6W |
| R707 | 1-215-423-00 | s | METAL 1.2K 1% 1/6W |
| R708 | 1-215-423-00 | s | METAL 1.2K 1% 1/6W |
| R709 | 1-215-423-00 | s | METAL 1.2K 1% 1/6W |
| R710 | 1-215-427-00 | s | METAL 1.8K 1% 1/6W |
| R711 | 1-215-423-00 | s | METAL 1.2K 1% 1/6W |
| R712 | 1-215-434-00 | s | METAL 3.6K 1% 1/6W |
| R713 | 1-215-430-00 | s | METAL 2.4K 1% 1/6W |
| R714 | 1-215-423-00 | s | METAL 1.2K 1% 1/6W |
| R715 | 1-215-423-00 | s | METAL 1.2K 1% 1/6W |
| R716 | 1-215-423-00 | s | METAL 1.2K 1% 1/6W |
| R717 | 1-215-423-00 | s | METAL 1.2K 1% 1/6W |
| R718 | 1-215-427-00 | s | METAL 1.8K 1% 1/6W |
| R719 | 1-215-423-00 | s | METAL 1.2K 1% 1/6W |
| R720 | 1-215-434-00 | s | METAL 3.6K 1% 1/6W |
| R721 | 1-215-449-00 | s | METAL 15K 1% 1/6W |
| R722 | 1-215-428-00 | s | METAL 2K 1% 1/6W |
| R723 | 1-215-449-00 | s | METAL 15K 1% 1/6W |
| R724 | 1-215-437-00 | s | METAL 4.7K 1% 1/6W |
| R725 | 1-215-397-00 | s | METAL 100 1% 1/6W |
| R726 | 1-215-437-00 | s | METAL 4.7K 1% 1/6W |
| R727 | 1-215-429-00 | s | METAL 2.2K 1% 1/6W |
| R728 | 1-215-429-00 | s | METAL 2.2K 1% 1/6W |
| R729 | 1-215-429-00 | s | METAL 2.2K 1% 1/6W |
| R730 | 1-215-430-00 | s | METAL 2.4K 1% 1/6W |
| R731 | 1-215-423-00 | s | METAL 1.2K 1% 1/6W |
| R732 | 1-215-423-00 | s | METAL 1.2K 1% 1/6W |
| R733 | 1-215-423-00 | s | METAL 1.2K 1% 1/6W |
| R734 | 1-215-423-00 | s | METAL 1.2K 1% 1/6W |
| R735 | 1-215-427-00 | s | METAL 1.8K 1% 1/6W |
| R736 | 1-215-423-00 | s | METAL 1.2K 1% 1/6W |
| R737 | 1-215-434-00 | s | METAL 3.6K 1% 1/6W |
| R738 | 1-215-430-00 | s | METAL 2.4K 1% 1/6W |
| R739 | 1-215-423-00 | s | METAL 1.2K 1% 1/6W |
| R740 | 1-215-423-00 | s | METAL 1.2K 1% 1/6W |
| R741 | 1-215-423-00 | s | METAL 1.2K 1% 1/6W |
| R742 | 1-215-423-00 | s | METAL 1.2K 1% 1/6W |
| R743 | 1-215-427-00 | s | METAL 1.8K 1% 1/6W |
| R744 | 1-215-423-00 | s | METAL 1.2K 1% 1/6W |
| R745 | 1-215-434-00 | s | METAL 3.6K 1% 1/6W |
| R746 | 1-215-449-00 | s | METAL 15K 1% 1/6W |
| R747 | 1-215-428-00 | s | METAL 2K 1% 1/6W |
| R748 | 1-215-449-00 | s | METAL 15K 1% 1/6W |
| R749 | 1-215-437-00 | s | METAL 4.7K 1% 1/6W |
| R750 | 1-215-397-00 | s | METAL 100 1% 1/6W |
| R751 | 1-215-445-00 | s | METAL 10K 1% 1/6W |
| R752 | 1-215-417-00 | s | METAL 680 1% 1/6W |
| R753 | 1-215-424-00 | s | METAL 1.3K 1% 1/6W |

(AU-109 BOARD)

| Ref. No. or Q'ty | Part No. | SP | Description |
|---|---|---|---|
| R754 | 1-215-435-00 | s | METAL 3.9K 1% 1/6W |
| R755 | 1-215-435-00 | s | METAL 3.9K 1% 1/6W |
| R756 | 1-215-437-00 | s | METAL 4.7K 1% 1/6W |
| R757 | 1-215-437-00 | s | METAL 4.7K 1% 1/6W |
| R758 | 1-215-445-00 | s | METAL 10K 1% 1/6W |
| R759 | 1-215-433-00 | s | METAL 3.3K 1% 1/6W |
| R760 | 1-215-445-00 | s | METAL 10K 1% 1/6W |
| R761 | 1-215-433-00 | s | METAL 3.3K 1% 1/6W |
| R762 | 1-215-421-00 | s | METAL 1K 1% 1/6W |
| R763 | 1-215-437-00 | s | METAL 4.7K 1% 1/6W |
| R764 | 1-215-445-00 | s | METAL 10K 1% 1/6W |
| R765 | 1-215-453-00 | s | METAL 22K 1% 1/6W |
| R766 | 1-215-453-00 | s | METAL 22K 1% 1/6W |
| R767 | 1-215-463-00 | s | METAL 56K 1% 1/6W |
| R768 | 1-215-429-00 | s | METAL 2.2K 1% 1/6W |
| R801 | 1-215-437-00 | s | METAL 4.7K 1% 1/6W |
| R802 | 1-215-429-00 | s | METAL 2.2K 1% 1/6W |
| R803 | 1-215-429-00 | s | METAL 2.2K 1% 1/6W |
| R804 | 1-215-429-00 | s | METAL 2.2K 1% 1/6W |
| R805 | 1-215-430-00 | s | METAL 2.4K 1% 1/6W |
| R806 | 1-215-423-00 | s | METAL 1.2K 1% 1/6W |
| R807 | 1-215-423-00 | s | METAL 1.2K 1% 1/6W |
| R808 | 1-215-423-00 | s | METAL 1.2K 1% 1/6W |
| R809 | 1-215-423-00 | s | METAL 1.2K 1% 1/6W |
| R810 | 1-215-427-00 | s | METAL 1.8K 1% 1/6W |
| R811 | 1-215-423-00 | s | METAL 1.2K 1% 1/6W |
| R812 | 1-215-434-00 | s | METAL 3.6K 1% 1/6W |
| R813 | 1-215-430-00 | s | METAL 2.4K 1% 1/6W |
| R814 | 1-215-423-00 | s | METAL 1.2K 1% 1/6W |
| R815 | 1-215-423-00 | s | METAL 1.2K 1% 1/6W |
| R816 | 1-215-423-00 | s | METAL 1.2K 1% 1/6W |
| R817 | 1-215-423-00 | s | METAL 1.2K 1% 1/6W |
| R818 | 1-215-427-00 | s | METAL 1.8K 1% 1/6W |
| R819 | 1-215-423-00 | s | METAL 1.2K 1% 1/6W |
| R820 | 1-215-434-00 | s | METAL 3.6K 1% 1/6W |
| R821 | 1-215-449-00 | s | METAL 15K 1% 1/6W |
| R822 | 1-215-428-00 | s | METAL 2K 1% 1/6W |
| R823 | 1-215-449-00 | s | METAL 15K 1% 1/6W |
| R824 | 1-215-437-00 | s | METAL 4.7K 1% 1/6W |
| R825 | 1-215-397-00 | s | METAL 100 1% 1/6W |
| R826 | 1-215-437-00 | s | METAL 4.7K 1% 1/6W |
| R827 | 1-215-429-00 | s | METAL 2.2K 1% 1/6W |
| R828 | 1-215-429-00 | s | METAL 2.2K 1% 1/6W |
| R829 | 1-215-429-00 | s | METAL 2.2K 1% 1/6W |
| R830 | 1-215-430-00 | s | METAL 2.4K 1% 1/6W |
| R831 | 1-215-423-00 | s | METAL 1.2K 1% 1/6W |
| R832 | 1-215-423-00 | s | METAL 1.2K 1% 1/6W |
| R833 | 1-215-423-00 | s | METAL 1.2K 1% 1/6W |
| R834 | 1-215-423-00 | s | METAL 1.2K 1% 1/6W |
| R835 | 1-215-427-00 | s | METAL 1.8K 1% 1/6W |
| R836 | 1-215-423-00 | s | METAL 1.2K 1% 1/6W |
| R837 | 1-215-434-00 | s | METAL 3.6K 1% 1/6W |
| R838 | 1-215-430-00 | s | METAL 2.4K 1% 1/6W |
| R839 | 1-215-423-00 | s | METAL 1.2K 1% 1/6W |
| R840 | 1-215-423-00 | s | METAL 1.2K 1% 1/6W |
| R841 | 1-215-423-00 | s | METAL 1.2K 1% 1/6W |
| R842 | 1-215-423-00 | s | METAL 1.2K 1% 1/6W |
| R843 | 1-215-427-00 | s | METAL 1.8K 1% 1/6W |
| R844 | 1-215-423-00 | s | METAL 1.2K 1% 1/6W |

(AU-109 BOARD)

| Ref. No. or Q'ty | Part No. | SP | Description |
|---|---|---|---|
| R845 | 1-215-434-00 | s | METAL 3.6K 1% 1/6W |
| R846 | 1-215-449-00 | s | METAL 15K 1% 1/6W |
| R847 | 1-215-428-00 | s | METAL 2K 1% 1/6W |
| R848 | 1-215-449-00 | s | METAL 15K 1% 1/6W |
| R849 | 1-215-437-00 | s | METAL 4.7K 1% 1/6W |
| R850 | 1-215-397-00 | s | METAL 100 1% 1/6W |
| R851 | 1-215-445-00 | s | METAL 10K 1% 1/6W |
| R852 | 1-215-417-00 | s | METAL 680 1% 1/6W |
| R853 | 1-215-424-00 | s | METAL 1.3K 1% 1/6W |
| R854 | 1-215-435-00 | s | METAL 3.9K 1% 1/6W |
| R855 | 1-215-435-00 | s | METAL 3.9K 1% 1/6W |
| R856 | 1-215-437-00 | s | METAL 4.7K 1% 1/6W |
| R857 | 1-215-437-00 | s | METAL 4.7K 1% 1/6W |
| R858 | 1-215-445-00 | s | METAL 10K 1% 1/6W |
| R859 | 1-215-433-00 | s | METAL 3.3K 1% 1/6W |
| R860 | 1-215-445-00 | s | METAL 10K 1% 1/6W |
| R861 | 1-215-433-00 | s | METAL 3.3K 1% 1/6W |
| R862 | 1-215-421-00 | s | METAL 1K 1% 1/6W |
| R863 | 1-215-437-00 | s | METAL 4.7K 1% 1/6W |
| R864 | 1-215-445-00 | s | METAL 10K 1% 1/6W |
| R865 | 1-215-453-00 | s | METAL 22K 1% 1/6W |
| R866 | 1-215-453-00 | s | METAL 22K 1% 1/6W |
| R867 | 1-215-463-00 | s | METAL 56K 1% 1/6W |
| R868 | 1-215-429-00 | s | METAL 2.2K 1% 1/6W |
| R869 | 1-215-445-00 | s | METAL 10K 1% 1/6W |
| R875 | 1-215-445-00 | s | METAL 10K 1% 1/6W |
| R876 | 1-215-445-00 | s | METAL 10K 1% 1/6W |
| R877 | 1-215-445-00 | s | METAL 10K 1% 1/6W |
| R901 | 1-215-445-00 | s | METAL 10K 1% 1/6W |
| R902 | 1-215-457-00 | s | METAL 33K 1% 1/6W |
| R903 | 1-215-445-00 | s | METAL 10K 1% 1/6W |
| R904 | 1-215-457-00 | s | METAL 33K 1% 1/6W |
| R905 | 1-215-445-00 | s | METAL 10K 1% 1/6W |
| R906 | 1-215-445-00 | s | METAL 10K 1% 1/6W |
| R907 | 1-215-469-00 | s | METAL 100K 1% 1/6W |
| R908 | 1-215-468-00 | s | METAL 91K 1% 1/6W |
| R909 | 1-215-445-00 | s | METAL 10K 1% 1/6W |
| R910 | 1-215-418-00 | s | METAL 750 1% 1/6W |
| R911 | 1-215-437-00 | s | METAL 4.7K 1% 1/6W |
| R912 | 1-215-397-00 | s | METAL 100 1% 1/6W |
| R913 | 1-215-397-00 | s | METAL 100 1% 1/6W |
| R914 | 1-215-421-00 | s | METAL 1K 1% 1/6W |
| R915 | 1-215-463-00 | s | METAL 56K 1% 1/6W |
| R916 | 1-215-460-00 | s | METAL 43K 1% 1/6W |
| R917 | 1-215-462-00 | s | METAL 51K 1% 1/6W |
| R918 | 1-215-445-00 | s | METAL 10K 1% 1/6W |
| R919 | 1-215-437-00 | s | METAL 4.7K 1% 1/6W |
| R920 | 1-215-445-00 | s | METAL 10K 1% 1/6W |
| R921 | 1-215-418-00 | s | METAL 750 1% 1/6W |
| R922 | 1-215-469-00 | s | METAL 100K 1% 1/6W |
| R923 | 1-215-469-00 | s | METAL 100K 1% 1/6W |
| R924 | 1-215-437-00 | s | METAL 4.7K 1% 1/6W |
| R925 | 1-215-445-00 | s | METAL 10K 1% 1/6W |
| R926 | 1-215-445-00 | s | METAL 10K 1% 1/6W |
| R927 | 1-215-445-00 | s | METAL 10K 1% 1/6W |
| R928 | 1-215-445-00 | s | METAL 10K 1% 1/6W |
| R929 | 1-215-445-00 | s | METAL 10K 1% 1/6W |
| R930 | 1-215-445-00 | s | METAL 10K 1% 1/6W |
| R931 | 1-215-461-00 | s | METAL 47K 1% 1/6W |

(AU-109 BOARD)

| Ref. No. or Q'ty | Part No. | SP | Description |
|---|---|---|---|
| R932 | 1-215-461-00 | s | METAL 47K 1% 1/6W |
| R933 | 1-215-397-00 | s | METAL 100 1% 1/6W |
| R934 | 1-215-421-00 | s | METAL 1K 1% 1/6W |
| R935 | 1-215-445-00 | s | METAL 10K 1% 1/6W |
| R936 | 1-215-456-00 | s | METAL 30K 1% 1/6W |
| R937 | 1-215-487-00 | s | METAL 560K 1% 1/6W |
| R938 | 1-215-437-00 | s | METAL 4.7K 1% 1/6W |
| R939 | 1-215-437-00 | s | METAL 4.7K 1% 1/6W |
| R940 | 1-215-421-00 | s | METAL 1K 1% 1/6W |
| R941 | 1-215-445-00 | s | METAL 10K 1% 1/6W |
| R942 | 1-215-456-00 | s | METAL 30K 1% 1/6W |
| R943 | 1-215-487-00 | s | METAL 560K 1% 1/6W |
| R944 | 1-215-445-00 | s | METAL 10K 1% 1/6W |
| R945 | 1-215-436-00 | s | METAL 4.3K 1% 1/6W |
| R946 | 1-215-445-00 | s | METAL 10K 1% 1/6W |
| R947 | 1-215-445-00 | s | METAL 10K 1% 1/6W |
| R948 | 1-215-445-00 | s | METAL 10K 1% 1/6W |
| R949 | 1-215-445-00 | s | METAL 10K 1% 1/6W |
| R950 | 1-215-423-00 | s | METAL 1.2K 1% 1/6W |
| R951 | 1-215-423-00 | s | METAL 1.2K 1% 1/6W |
| R952 | 1-215-423-00 | s | METAL 1.2K 1% 1/6W |
| R953 | 1-215-423-00 | s | METAL 1.2K 1% 1/6W |
| R954 | 1-215-457-00 | s | METAL 33K 1% 1/6W |
| R955 | 1-215-461-00 | s | METAL 47K 1% 1/6W |
| R956 | 1-215-461-00 | s | METAL 47K 1% 1/6W |
| R957 | 1-215-397-00 | s | METAL 100 1% 1/6W |
| R958 | 1-215-473-00 | s | METAL 150K 1% 1/6W |
| R959 | 1-215-445-00 | s | METAL 10K 1% 1/6W |
| R960 | 1-215-473-00 | s | METAL 150K 1% 1/6W |
| R961 | 1-215-469-00 | s | METAL 100K 1% 1/6W |
| R962 | 1-215-429-00 | s | METAL 2.2K 1% 1/6W |
| R963 | 1-215-445-00 | s | METAL 10K 1% 1/6W |
| R964 | 1-215-445-00 | s | METAL 10K 1% 1/6W |
| R965 | 1-215-461-00 | s | METAL 47K 1% 1/6W |
| R966 | 1-215-461-00 | s | METAL 47K 1% 1/6W |
| R967 | 1-215-438-00 | s | METAL 5.1K 1% 1/6W |
| R968 | 1-215-436-00 | s | METAL 4.3K 1% 1/6W |
| R969 | 1-215-421-00 | s | METAL 1K 1% 1/6W |
| R970 | 1-215-436-00 | s | METAL 4.3K 1% 1/6W |
| R971 | 1-215-437-00 | s | METAL 4.7K 1% 1/6W |
| R972 | 1-215-469-00 | s | METAL 100K 1% 1/6W |
| R973 | 1-215-397-00 | s | METAL 100 1% 1/6W |
| R974 | 1-215-452-00 | s | METAL 20K 1% 1/6W |
| R975 | 1-215-452-00 | s | METAL 20K 1% 1/6W |
| R976 | 1-215-452-00 | s | METAL 20K 1% 1/6W |
| R977 | 1-215-445-00 | s | METAL 10K 1% 1/6W |
| R978 | 1-215-456-00 | s | METAL 30K 1% 1/6W |
| R979 | 1-215-397-00 | s | METAL 100 1% 1/6W |
| R980 | 1-215-437-00 | s | METAL 4.7K 1% 1/6W |
| R981 | 1-215-397-00 | s | METAL 100 1% 1/6W |
| R982 | 1-215-441-00 | s | METAL 6.8K 1% 1/6W |
| R983 | 1-215-432-00 | s | METAL 3K 1% 1/6W |
| R984 | 1-215-477-00 | s | METAL 220K 1% 1/6W |
| R986 | 1-215-445-00 | s | METAL 10K 1% 1/6W |
| R987 | 1-215-445-00 | s | METAL 10K 1% 1/6W |
| R988 | 1-215-445-00 | s | METAL 10K 1% 1/6W |
| R989 | 1-215-445-00 | s | METAL 10K 1% 1/6W |
| R990 | 1-215-445-00 | s | METAL 10K 1% 1/6W |
| R991 | 1-215-445-00 | s | METAL 10K 1% 1/6W |

| Ref. No. or Q'ty | Part No. | SP | Description |
|---|---|---|---|
| R992 | 1-215-445-00 | s | METAL 10K 1% 1/6W |
| R993 | 1-215-445-00 | s | METAL 10K 1% 1/6W |
| R994 | 1-215-469-00 | s | METAL 100K 1% 1/6W |
| R995 | 1-215-469-00 | s | METAL 100K 1% 1/6W |
| R996 | 1-215-469-00 | s | METAL 100K 1% 1/6W |
| R997 | 1-215-385-00 | s | METAL 33 1% 1/6W |
| R998 | 1-215-437-00 | s | METAL 4.7K 1% 1/6W |
| R999 | 1-215-437-00 | s | METAL 4.7K 1% 1/6W |
| R1000 | 1-215-385-00 | s | METAL 33 1% 1/6W |
| R1001 | 1-215-445-00 | s | METAL 10K 1% 1/6W |
| R1002 | 1-215-445-00 | s | METAL 10K 1% 1/6W |
| R1003 | 1-215-445-00 | s | METAL 10K 1% 1/6W |
| R1004 | 1-215-445-00 | s | METAL 10K 1% 1/6W |
| R1005 | 1-215-445-00 | s | METAL 10K 1% 1/6W |
| R1006 | 1-215-421-00 | s | METAL 1K 1% 1/6W |
| R1007 | 1-215-463-00 | s | METAL 56K 1% 1/6W |
| R1008 | 1-215-429-00 | s | METAL 2.2K 1% 1/6W |
| R1009 | 1-215-442-00 | s | METAL 7.5K 1% 1/6W |
| R1010 | 1-215-433-00 | s | METAL 3.3K 1% 1/6W |
| R1011 | 1-215-419-00 | s | METAL 820 1% 1/6W |
| R1012 | 1-215-419-00 | s | METAL 820 1% 1/6W |
| R1013 | 1-215-445-00 | s | METAL 10K 1% 1/6W |
| R1014 | 1-215-445-00 | s | METAL 10K 1% 1/6W |
| R1015 | 1-215-445-00 | s | METAL 10K 1% 1/6W |
| R1016 | 1-215-445-00 | s | METAL 10K 1% 1/6W |
| R1017 | 1-215-405-00 | s | METAL 220 1% 1/6W |
| R1018 | 1-215-405-00 | s | METAL 220 1% 1/6W |
| R1019 | 1-215-445-00 | s | METAL 10K 1% 1/6W |
| R1020 | 1-215-445-00 | s | METAL 10K 1% 1/6W |
| R1021 | 1-215-433-00 | s | METAL 3.3K 1% 1/6W |
| R1022 | 1-215-461-00 | s | METAL 47K 1% 1/6W |
| R1023 | 1-215-461-00 | s | METAL 47K 1% 1/6W |
| R1025 | 1-215-457-00 | s | METAL 33K 1% 1/6W |
| R1026 | 1-215-457-00 | s | METAL 33K 1% 1/6W |
| R1027 | 1-215-454-00 | s | METAL 24K 1% 1/6W |
| R1028 | 1-215-426-00 | s | METAL 1.6K 1% 1/6W |
| R1029 | 1-215-426-00 | s | METAL 1.6K 1% 1/6W |
| RB1 | 1-231-533-00 | s | RESISTOR BLOCK 10Kx4 |
| RB2 | 1-231-410-00 | s | RESISTOR BLOCK 10Kx8 |
| RB3 | 1-231-450-00 | s | RESISTOR BLOCK 3.3Kx8 |
| RB4 | 1-231-410-00 | s | RESISTOR BLOCK 10Kx8 |
| RB101 | 1-231-521-00 | s | RESISTOR BLOCK 3.3Kx4 |
| RB201 | 1-231-521-00 | s | RESISTOR BLOCK 3.3Kx4 |
| RB301 | 1-231-521-00 | s | RESISTOR BLOCK 3.3Kx4 |
| RB401 | 1-231-521-00 | s | RESISTOR BLOCK 3.3Kx4 |
| RB501 | 1-231-521-00 | s | RESISTOR BLOCK 3.3Kx4 |
| RB601 | 1-231-521-00 | s | RESISTOR BLOCK 3.3Kx4 |
| RB701 | 1-231-521-00 | s | RESISTOR BLOCK 3.3Kx4 |
| RB801 | 1-231-521-00 | s | RESISTOR BLOCK 3.3Kx4 |
| RV101 | 1-237-518-21 | s | RES, ADJ, METAL 10K |
| RV102 | 1-237-518-21 | s | RES, ADJ, METAL 10K |
| RV201 | 1-237-518-21 | s | RES, ADJ, METAL 10K |
| RV202 | 1-237-518-21 | s | RES, ADJ, METAL 10K |
| RV301 | 1-237-518-21 | s | RES, ADJ, METAL 10K |
| RV302 | 1-237-518-21 | s | RES, ADJ, METAL 10K |
| RV401 | 1-237-518-21 | s | RES, ADJ, METAL 10K |
| RV402 | 1-237-518-21 | s | RES, ADJ, METAL 10K |
| RV501 | 1-237-518-21 | s | RES, ADJ, METAL 10K |
| RV502 | 1-237-518-21 | s | RES, ADJ, METAL 10K |
| RV601 | 1-237-518-21 | s | RES, ADJ, METAL 10K |
| RV602 | 1-237-518-21 | s | RES, ADJ, METAL 10K |
| RV701 | 1-237-518-21 | s | RES, ADJ, METAL 10K |
| RV702 | 1-237-518-21 | s | RES, ADJ, METAL 10K |
| RV801 | 1-237-518-21 | s | RES, ADJ, METAL 10K |
| RV802 | 1-237-518-21 | s | RES, ADJ, METAL 10K |
| RV901 | 1-237-517-21 | s | RES, ADJ, METAL 5K |
| RV902 | 1-237-518-21 | s | RES, ADJ, METAL 10K |
| S1 | 1-570-623-11 | s | SWITCH, DIP 8-CKT |
| X1 | 1-567-798-12 | s | CRYSTAL 14.7456MHz |

-------

## CD-37 BOARD

-------

| Ref. No. or Q'ty | Part No. | SP | Description |
|---|---|---|---|
| 1pc | A-6015-109-A | o | MOUNTED CIRCUIT BOARD, CD-37 |
| 3pcs | 4-857-833-00 | o | INSULATOR, 03P |
| 3pcs | 7-682-649-09 | s | SCREW +PS 3X10 |
| 2pcs | 7-682-947-01 | s | SCREW +PSW 3X6 |
| 2pcs | 7-682-949-01 | s | SCREW +PSW 3X10 |
| 5pcs | 7-682-951-01 | s | SCREW +PSW 3X14 |
| C1 | 1-130-487-00 | s | MYLAR 0.022uF 5% 50V |
| C2 | 1-124-122-11 | s | ELECT 100 20% 50V |
| C3 | 1-130-495-00 | s | MYLAR 0.1uF 5% 50V |
| C4 | 1-164-208-11 | s | CERAMIC 0.1uF 99% 50V |
| C5 | 1-164-208-11 | s | CERAMIC 0.1uF 99% 50V |
| C6 | 1-130-491-00 | s | MYLAR 0.047uF 5% 50V |
| C7 | 1-130-487-00 | s | MYLAR 0.022uF 5% 50V |
| C8 | 1-164-208-11 | s | CERAMIC 0.1uF 99% 50V |
| C9 | 1-164-208-11 | s | CERAMIC 0.1uF 99% 50V |
| C10 | 1-102-106-00 | s | CERAMIC 100PF 10% 50V |
| C11 | 1-161-055-00 | s | CERAMIC 0.022uF 10% 50V |
| C12 | 1-130-471-00 | s | MYLAR 0.001uF 5% 50V |
| C13 | 1-130-471-00 | s | MYLAR 0.001uF 5% 50V |
| C14 | 1-164-208-11 | s | CERAMIC 0.1uF 99% 50V |
| C15 | 1-164-208-11 | s | CERAMIC 0.1uF 99% 50V |
| C16 | 1-130-471-00 | s | MYLAR 0.001uF 5% 50V |
| C17 | 1-130-471-00 | s | MYLAR 0.001uF 5% 50V |
| C18 | 1-164-208-11 | s | CERAMIC 0.1uF 99% 50V |
| C19 | 1-161-055-00 | s | CERAMIC 0.022uF 10% 50V |
| C20 | 1-130-487-00 | s | MYLAR 0.022uF 5% 50V |
| C21 | 1-130-487-00 | s | MYLAR 0.022uF 5% 50V |
| C22 | 1-130-487-00 | s | MYLAR 0.022uF 5% 50V |
| C23 | 1-126-160-11 | s | ELECT 1uF 20% 50V |
| C24 | 1-130-483-00 | s | MYLAR 0.01uF 5% 50V |
| C25 | 1-130-483-00 | s | MYLAR 0.01uF 5% 50V |
| C26 | 1-164-208-11 | s | CERAMIC 0.1uF 99% 50V |
| C27 | 1-107-169-00 | s | MICA 100PF 5% 500V |
| C28 | 1-124-584-00 | s | ELECT 100uF 20% 10V |
| C31 | 1-164-208-11 | s | CERAMIC 0.1uF 99% 50V |
| C32 | 1-164-208-11 | s | CERAMIC 0.1uF 99% 50V |
| C33 | 1-164-208-11 | s | CERAMIC 0.1uF 99% 50V |
| C34 | 1-164-208-11 | s | CERAMIC 0.1uF 99% 50V |
| C35 | 1-164-208-11 | s | CERAMIC 0.1uF 99% 50V |
| C36 | 1-102-106-00 | s | CERAMIC 100PF 10% 50V |
| C37 | 1-164-208-11 | s | CERAMIC 0.1uF 99% 50V |
| C38 | 1-126-096-11 | s | ELECT 10uF 20% 35V |
| C39 | 1-130-475-00 | s | MYLAR 0.0022uF 5% 50V |
| C40 | 1-124-566-11 | s | ELECT 120uF 20% 6.3V |
| C41 | 1-164-208-11 | s | CERAMIC 0.1uF 99% 50V |
| C42 | 1-164-208-11 | s | CERAMIC 0.1uF 99% 50V |
| C43 | 1-164-208-11 | s | CERAMIC 0.1uF 99% 50V |
| C44 | 1-164-208-11 | s | CERAMIC 0.1uF 99% 50V |
| C45 | 1-124-943-11 | s | ELECT 39 20% 25V |
| C46 | 1-164-208-11 | s | CERAMIC 0.1uF 99% 50V |
| C47 | 1-164-208-11 | s | CERAMIC 0.1uF 99% 50V |
| C48 | 1-124-943-11 | s | ELECT 39 20% 25V |
| C49 | 1-164-208-11 | s | CERAMIC 0.1uF 99% 50V |
| C50 | 1-164-208-11 | s | CERAMIC 0.1uF 99% 50V |
| C51 | 1-124-566-11 | s | ELECT 120uF 20% 6.3V |
| C52 | 1-130-495-00 | s | MYLAR 0.1uF 5% 50V |
| C53 | 1-123-605-00 | s | ELECT 100 20% 100V |
| C54 | 1-164-208-11 | s | CERAMIC 0.1uF 99% 50V |

(CD-37 BOARD)

| Ref. No. or Q'ty | Part No. | SP | Description |
|---|---|---|---|
| C55 | 1-164-208-11 | s | CERAMIC 0.1uF 99% 50V |
| C56 | 1-164-208-11 | s | CERAMIC 0.1uF 99% 50V |
| C57 | 1-164-208-11 | s | CERAMIC 0.1uF 99% 50V |
| C58 | 1-164-208-11 | s | CERAMIC 0.1uF 99% 50V |
| C59 | 1-164-208-11 | s | CERAMIC 0.1uF 99% 50V |
| C60 | 1-164-208-11 | s | CERAMIC 0.1uF 99% 50V |
| C61 | 1-164-208-11 | s | CERAMIC 0.1uF 99% 50V |
| C62 | 1-164-208-11 | s | CERAMIC 0.1uF 99% 50V |
| C63 | 1-164-208-11 | s | CERAMIC 0.1uF 99% 50V |
| C64 | 1-164-208-11 | s | CERAMIC 0.1uF 99% 50V |
| C65 | 1-164-208-11 | s | CERAMIC 0.1uF 99% 50V |
| C66 | 1-164-208-11 | s | CERAMIC 0.1uF 99% 50V |
| C67 | 1-164-208-11 | s | CERAMIC 0.1uF 99% 50V |
| C70 | 1-164-208-11 | s | CERAMIC 0.1uF 99% 50V |
| C71 | 1-164-208-11 | s | CERAMIC 0.1uF 99% 50V |
| C72 | 1-164-208-11 | s | CERAMIC 0.1uF 99% 50V |
| C73 | 1-164-208-11 | s | CERAMIC 0.1uF 99% 50V |
| C74 | 1-164-208-11 | s | CERAMIC 0.1uF 99% 50V |
| C75 | 1-164-208-11 | s | CERAMIC 0.1uF 99% 50V |
| C76 | 1-164-208-11 | s | CERAMIC 0.1uF 99% 50V |
| CN101 | 1-560-724-00 | o | CONNECTOR, 10P, MALE |
| CN102 | 1-560-725-00 | o | CONNECTOR, 16P, MALE |
| CN103 | 1-560-300-00 | o | CONNECTOR, IL 3P, MALE |
| CN104 | 1-560-726-00 | o | CONNECTOR, 20P, MALE |
| CN105 | 1-560-302-00 | o | CONNECTOR, IL 5P, MALE |
| CN106 | 1-560-301-00 | o | CONNECTOR, IL 4P, MALE |
| CN107 | 1-560-723-00 | o | CONNECTOR, 3P, MALE |
| CN109 | 1-560-303-00 | o | CONNECTOR, IL 6P, MALE |
| CN110 | ⚠1-560-723-00 | o | CONNECTOR, 3P, MALE |
| D1 | 8-719-200-02 | s | DIODE 10E2 |
| D2 | 8-719-911-19 | s | DIODE 1SS119 |
| D3 | 8-719-933-28 | s | DIODE DAP209S |
| D4 | 8-719-911-19 | s | DIODE 1SS119 |
| D5 | 8-719-911-19 | s | DIODE 1SS119 |
| D6 | 8-719-911-19 | s | DIODE 1SS119 |
| D7 | 8-719-933-30 | s | DIODE DA210S |
| D8 | 8-719-933-30 | s | DIODE DA210S |
| D9 | 8-719-911-19 | s | DIODE 1SS119 |
| D10 | 8-719-936-56 | s | DIODE DAN209S |
| D11 | 8-719-933-28 | s | DIODE DAP209S |
| D12 | 8-719-911-19 | s | DIODE 1SS119 |
| D13 | 8-719-933-30 | s | DIODE DA210S |
| D14 | 8-719-200-02 | s | DIODE 10E2 |
| D15 | 8-719-911-19 | s | DIODE 1SS119 |
| D16 | 8-719-911-19 | s | DIODE 1SS119 |
| D17 | 8-719-911-19 | s | DIODE 1SS119 |
| D18 | 8-719-912-53 | s | DIODE ESAC25-02D |
| D19 | 8-719-912-53 | s | DIODE ESAC25-02D |
| D20 | 8-719-912-53 | s | DIODE ESAC25-02D |
| D21 | 8-719-933-28 | s | DIODE DAP209S |
| D23 | 8-719-933-30 | s | DIODE DA210S |
| D25 | 8-719-911-19 | s | DIODE 1SS119 |
| D26 | 8-719-911-19 | s | DIODE 1SS119 |
| D27 | 8-719-911-19 | s | DIODE 1SS119 |
| D29 | 8-719-911-19 | s | DIODE 1SS119 |
| IC1 | 8-759-145-58 | s | IC UPC4558C |
| IC2 | 8-759-145-58 | s | IC UPC4558C |
| IC3 | 8-759-135-80 | s | IC UPC358C |

(CD-37 BOARD)

| Ref. No. or Q'ty | Part No. | SP | Description |
|---|---|---|---|
| IC4 | 8-759-145-58 | s | IC UPC4558C |
| IC5 | 8-759-503-91 | s | IC TL082CP |
| IC6 | 8-759-503-91 | s | IC TL082CP |
| IC7 | 8-759-000-48 | s | IC MC14052BCP |
| IC8 | 8-759-000-48 | s | IC MC14052BCP |
| IC9 | 8-759-103-93 | s | IC UPC393C |
| IC10 | 8-759-145-58 | s | IC UPC4558C |
| IC11 | 8-759-145-58 | s | IC UPC4558C |
| IC12 | 8-759-103-93 | s | IC UPC393C |
| IC13 | 8-759-131-11 | s | IC UPC311C |
| IC14 | 8-759-145-58 | s | IC UPC4558C |
| IC15 | 8-759-135-80 | s | IC UPC358C |
| IC16 | 8-759-103-93 | s | IC UPC393C |
| IC17 | 8-759-103-93 | s | IC UPC393C |
| IC18 | 8-759-103-93 | s | IC UPC393C |
| IC19 | 8-759-103-93 | s | IC UPC393C |
| IC20 | 8-759-145-58 | s | IC UPC4558C |
| IC21 | 8-759-145-58 | s | IC UPC4558C |
| IC22 | 8-759-700-65 | s | IC NJM79L05A |
| IC23 | 8-759-208-45 | s | IC MP6901 |
| IC24 | 8-759-103-93 | s | IC UPC393C |
| L1 | 1-421-370-00 | s | COIL, CHOKE |
| L2 | 1-421-370-00 | s | COIL, CHOKE |
| L3 | 1-421-370-00 | s | COIL, CHOKE |
| L4 | 1-408-405-00 | s | INDUCTOR 4.7uH |
| L5 | 1-408-405-00 | s | INDUCTOR 4.7uH |
| Q1 | 8-729-620-02 | s | TRANSISTOR 2SA1115-EF |
| Q2 | 8-729-382-64 | s | TRANSISTOR 2SC1826-G |
| Q3 | 8-729-900-80 | s | TRANSISTOR DTC114ES |
| Q4 | 8-729-900-89 | s | TRANSISTOR DTC144ES |
| Q5 | 8-729-900-89 | s | TRANSISTOR DTC144ES |
| Q6 | 8-729-900-89 | s | TRANSISTOR DTC144ES |
| Q7 | 8-729-900-89 | s | TRANSISTOR DTC144ES |
| Q8 | 8-729-900-89 | s | TRANSISTOR DTC144ES |
| Q9 | 8-729-900-89 | s | TRANSISTOR DTC144ES |
| Q10 | 8-729-900-89 | s | TRANSISTOR DTC144ES |
| Q11 | 8-729-105-71 | s | TRANSISTOR 2SK523-K2 |
| Q12 | 8-729-105-71 | s | TRANSISTOR 2SK523-K2 |
| Q13 | 8-729-105-71 | s | TRANSISTOR 2SK523-K2 |
| Q14 | 8-729-105-71 | s | TRANSISTOR 2SK523-K2 |
| Q15 | 8-729-105-71 | s | TRANSISTOR 2SK523-K2 |
| Q16 | 8-729-105-71 | s | TRANSISTOR 2SK523-K2 |
| Q17 | 8-729-238-32 | s | TRANSISTOR 2SC2383-Y |
| Q18 | 8-729-238-32 | s | TRANSISTOR 2SC2383-Y |
| Q19 | 8-729-238-32 | s | TRANSISTOR 2SC2383-Y |
| Q20 | 8-729-119-78 | s | TRANSISTOR 2SC2785-HFE |
| Q21 | 8-729-900-80 | s | TRANSISTOR DTC114ES |
| Q22 | 8-729-201-32 | s | TRANSISTOR 2SA1013 |
| Q23 | 8-729-238-32 | s | TRANSISTOR 2SC2383-Y |
| Q24 | 8-729-303-71 | s | TRANSISTOR 2SA1493-0 |
| Q25 | 8-729-201-32 | s | TRANSISTOR 2SA1013 |
| Q26 | 8-729-238-32 | s | TRANSISTOR 2SC2383-Y |
| Q27 | 8-729-238-32 | s | TRANSISTOR 2SC2383-Y |
| Q28 | 8-729-238-32 | s | TRANSISTOR 2SC2383-Y |
| Q29 | 8-729-201-32 | s | TRANSISTOR 2SA1013 |
| Q30 | 8-729-383-73 | s | TRANSISTOR 2SC2837 |
| Q31 | 8-729-195-23 | s | TRANSISTOR 2SA952 |
| Q33 | 8-729-383-73 | s | TRANSISTOR 2SC2837 |

(CD-37 BOARD)

| Ref. No. or Q'ty | Part No. | SP | Description |
|---|---|---|---|
| Q34 | 8-729-201-32 | s | TRANSISTOR 2SA1013 |
| Q35 | 8-729-383-73 | s | TRANSISTOR 2SC2837 |
| Q36 | 8-729-195-23 | s | TRANSISTOR 2SA952 |
| Q37 | 8-729-383-73 | s | TRANSISTOR 2SC2837 |
| Q38 | 8-729-201-32 | s | TRANSISTOR 2SA1013 |
| Q39 | 8-729-383-73 | s | TRANSISTOR 2SC2837 |
| Q40 | 8-729-195-23 | s | TRANSISTOR 2SA952 |
| Q41 | 8-729-383-73 | s | TRANSISTOR 2SC2837 |
| Q42 | 8-729-238-32 | s | TRANSISTOR 2SC2383-Y |
| Q43 | 8-729-238-32 | s | TRANSISTOR 2SC2383-Y |
| Q44 | 8-729-900-80 | s | TRANSISTOR DTC114ES |
| Q45 | 8-729-900-80 | s | TRANSISTOR DTC114ES |
| R1 | 1-249-423-11 | s | CARBON 3.3K 5% 1/4W |
| R2 | 1-249-417-11 | s | CARBON 1K 5% 1/4W |
| R3 | 1-249-406-11 | s | CARBON 120 5% 1/4W |
| R4 | 1-249-406-11 | s | CARBON 120 5% 1/4W |
| R5 | 1-249-406-11 | s | CARBON 120 5% 1/4W |
| R6 | 1-249-429-11 | s | CARBON 10K 5% 1/4W |
| R7 | 1-215-381-00 | s | METAL 22 1% 1/6W |
| R8 | 1-215-455-00 | s | METAL 27K 1% 1/6W |
| R9 | 1-215-455-00 | s | METAL 27K 1% 1/6W |
| R10 | 1-215-431-00 | s | METAL 2.7K 1% 1/6W |
| R11 | 1-215-445-00 | s | METAL 10K 1% 1/6W |
| R12 | 1-215-461-00 | s | METAL 47K 1% 1/6W |
| R13 | 1-215-453-00 | s | METAL 22K 1% 1/6W |
| R14 | 1-215-445-00 | s | METAL 10K 1% 1/6W |
| R15 | 1-215-445-00 | s | METAL 10K 1% 1/6W |
| R16 | 1-215-452-00 | s | METAL 20K 1% 1/6W |
| R17 | 1-215-445-00 | s | METAL 10K 1% 1/6W |
| R18 | 1-215-445-00 | s | METAL 10K 1% 1/6W |
| R19 | 1-215-471-00 | s | METAL 120K 1% 1/6W |
| R20 | 1-215-435-00 | s | METAL 3.9K 1% 1/6W |
| R21 | 1-215-459-00 | s | METAL 39K 1% 1/6W |
| R22 | 1-215-445-00 | s | METAL 10K 1% 1/6W |
| R23 | 1-215-454-00 | s | METAL 24K 1% 1/6W |
| R24 | 1-215-440-00 | s | METAL 6.2K 1% 1/6W |
| R25 | 1-215-452-00 | s | METAL 20K 1% 1/6W |
| R26 | 1-215-479-00 | s | METAL 270K 1% 1/6W |
| R27 | 1-215-455-00 | s | METAL 27K 1% 1/6W |
| R28 | 1-215-439-00 | s | METAL 5.6K 1% 1/6W |
| R29 | 1-215-463-00 | s | METAL 56K 1% 1/6W |
| R30 | 1-215-437-00 | s | METAL 4.7K 1% 1/6W |
| R31 | 1-215-461-00 | s | METAL 47K 1% 1/6W |
| R32 | 1-215-445-00 | s | METAL 10K 1% 1/6W |
| R33 | 1-215-425-00 | s | METAL 1.5K 1% 1/6W |
| R34 | 1-215-441-00 | s | METAL 6.8K 1% 1/6W |
| R35 | 1-215-445-00 | s | METAL 10K 1% 1/6W |
| R36 | 1-215-445-00 | s | METAL 10K 1% 1/6W |
| R37 | 1-215-445-00 | s | METAL 10K 1% 1/6W |
| R38 | 1-215-445-00 | s | METAL 10K 1% 1/6W |
| R39 | 1-215-429-00 | s | METAL 2.2K 1% 1/6W |
| R40 | 1-215-455-00 | s | METAL 27K 1% 1/6W |
| R41 | 1-215-462-00 | s | METAL 51K 1% 1/6W |
| R42 | 1-215-445-00 | s | METAL 10K 1% 1/6W |
| R43 | 1-215-445-00 | s | METAL 10K 1% 1/6W |
| R44 | 1-215-493-00 | s | METAL 1M 1% 1/6W |
| R45 | 1-249-418-11 | s | CARBON 1.2K 5% 1/4W |
| R46 | 1-249-433-11 | s | CARBON 22K 5% 1/4W |

(CD-37 BOARD)

| Ref. No. or Q'ty | Part No. | SP | Description |
|---|---|---|---|
| R47 | 1-215-445-00 | s | METAL 10K 1% 1/6W |
| R48 | 1-215-445-00 | s | METAL 10K 1% 1/6W |
| R49 | 1-215-462-00 | s | METAL 51K 1% 1/6W |
| R50 | 1-215-445-00 | s | METAL 10K 1% 1/6W |
| R51 | 1-215-493-00 | s | METAL 1M 1% 1/6W |
| R52 | 1-249-418-11 | s | CARBON 1.2K 5% 1/4W |
| R53 | 1-249-433-11 | s | CARBON 22K 5% 1/4W |
| R54 | 1-215-469-00 | s | METAL 100K 1% 1/6W |
| R55 | 1-215-429-00 | s | METAL 2.2K 1% 1/6W |
| R56 | 1-215-461-00 | s | METAL 47K 1% 1/6W |
| R57 | 1-215-485-00 | s | METAL 470K 1% 1/6W |
| R58 | 1-215-457-00 | s | METAL 33K 1% 1/6W |
| R59 | 1-215-453-00 | s | METAL 22K 1% 1/6W |
| R60 | 1-215-455-00 | s | METAL 27K 1% 1/6W |
| R61 | 1-215-469-00 | s | METAL 100K 1% 1/6W |
| R62 | 1-215-459-00 | s | METAL 39K 1% 1/6W |
| R63 | 1-215-465-00 | s | METAL 68K 1% 1/6W |
| R64 | 1-249-429-11 | s | CARBON 10K 5% 1/4W |
| R65 | 1-249-429-11 | s | CARBON 10K 5% 1/4W |
| R66 | 1-249-437-11 | s | CARBON 47K 5% 1/4W |
| R67 | 1-249-437-11 | s | CARBON 47K 5% 1/4W |
| R68 | 1-249-437-11 | s | CARBON 47K 5% 1/4W |
| R69 | 1-249-437-11 | s | CARBON 47K 5% 1/4W |
| R70 | 1-249-437-11 | s | CARBON 47K 5% 1/4W |
| R71 | 1-249-437-11 | s | CARBON 47K 5% 1/4W |
| R72 | 1-249-416-11 | s | CARBON 820 5% 1/4W |
| R73 | 1-249-416-11 | s | CARBON 820 5% 1/4W |
| R74 | 1-249-416-11 | s | CARBON 820 5% 1/4W |
| R75 | 1-249-405-11 | s | CARBON 100 5% 1/4W |
| R76 | 1-249-405-11 | s | CARBON 100 5% 1/4W |
| R77 | 1-249-416-11 | s | CARBON 820 5% 1/4W |
| R78 | 1-249-405-11 | s | CARBON 100 5% 1/4W |
| R79 | 1-249-405-11 | s | CARBON 100 5% 1/4W |
| R80 | 1-249-416-11 | s | CARBON 820 5% 1/4W |
| R81 | 1-249-405-11 | s | CARBON 100 5% 1/4W |
| R82 | 1-249-405-11 | s | CARBON 100 5% 1/4W |
| R83 | 1-249-416-11 | s | CARBON 820 5% 1/4W |
| R84 | ⚠1-249-413-11 | s | CARBON 470 5% 1/4W |
| R85 | ⚠1-249-413-11 | s | CARBON 470 5% 1/4W |
| R86 | ⚠1-249-413-11 | s | CARBON 470 5% 1/4W |
| R87 | 1-215-445-00 | s | METAL 10K 1% 1/6W |
| R88 | 1-215-452-00 | s | METAL 20K 1% 1/6W |
| R89 | 1-215-445-00 | s | METAL 10K 1% 1/6W |
| R90 | 1-215-452-00 | s | METAL 20K 1% 1/6W |
| R91 | 1-216-365-00 | s | METAL 0.47 5% 2W |
| R93 | 1-215-459-00 | s | METAL 39K 1% 1/6W |
| R94 | 1-215-469-00 | s | METAL 100K 1% 1/6W |
| R95 | 1-215-447-00 | s | METAL 12K 1% 1/6W |
| R96 | 1-215-446-00 | s | METAL 11K 1% 1/6W |
| R97 | 1-215-486-00 | s | METAL 510K 1% 1/6W |
| R98 | 1-215-429-00 | s | METAL 2.2K 1% 1/6W |
| R99 | 1-215-435-00 | s | METAL 3.9K 1% 1/6W |
| R100 | 1-215-477-00 | s | METAL 220K 1% 1/6W |
| R101 | 1-215-436-00 | s | METAL 4.3K 1% 1/6W |
| R102 | 1-215-458-00 | s | METAL 36K 1% 1/6W |
| R103 | 1-215-459-00 | s | METAL 39K 1% 1/6W |
| R104 | 1-215-421-00 | s | METAL 1K 1% 1/6W |
| R105 | 1-215-428-00 | s | METAL 2K 1% 1/6W |
| R106 | 1-215-428-00 | s | METAL 2K 1% 1/6W |

(CD-37 BOARD)

| Ref. No. or Q'ty | Part No. | SP | Description |
|---|---|---|---|
| R107 | 1-215-390-00 | s | METAL 51 1% 1/6W |
| R108 | ⚠1-247-717-11 | s | CARBON 2.2K 5% 1/4W |
| R109 | ⚠1-247-718-11 | s | CARBON 2.7K 5% 1/4W |
| R110 | ⚠1-247-718-11 | s | CARBON 2.7K 5% 1/4W |
| R112 | 1-215-414-00 | s | METAL 510 1% 1/6W |
| R113 | 1-215-429-00 | s | METAL 2.2K 1% 1/6W |
| R114 | 1-249-416-11 | s | CARBON 820 5% 1/4W |
| R115 | 1-249-415-11 | s | CARBON 680 5% 1/4W |
| R116 | 1-249-417-11 | s | CARBON 1K 5% 1/4W |
| R117 | 1-249-394-11 | s | CARBON 12 5% 1/4W |
| R118 | ⚠1-247-718-11 | s | CARBON 2.7K 5% 1/4W |
| R119 | 1-249-413-11 | s | CARBON 470 5% 1/4W |
| R120 | 1-249-413-11 | s | CARBON 470 5% 1/4W |
| R121 | 1-215-414-00 | s | METAL 510 1% 1/6W |
| R122 | 1-249-417-11 | s | CARBON 1K 5% 1/4W |
| R123 | ⚠1-247-718-11 | s | CARBON 2.7K 5% 1/4W |
| R124 | 1-249-413-11 | s | CARBON 470 5% 1/4W |
| R125 | 1-249-415-11 | s | CARBON 680 5% 1/4W |
| R126 | 1-249-416-11 | s | CARBON 820 5% 1/4W |
| R127 | 1-249-413-11 | s | CARBON 470 5% 1/4W |
| R128 | 1-215-414-00 | s | METAL 510 1% 1/6W |
| R129 | 1-249-415-11 | s | CARBON 680 5% 1/4W |
| R130 | 1-249-416-11 | s | CARBON 820 5% 1/4W |
| R131 | 1-249-423-11 | s | CARBON 3.3K 5% 1/4W |
| R132 | 1-249-417-11 | s | CARBON 1K 5% 1/4W |
| R133 | 1-249-413-11 | s | CARBON 470 5% 1/4W |
| R134 | 1-249-413-11 | s | CARBON 470 5% 1/4W |
| R135 | 1-215-445-00 | s | METAL 10K 1% 1/6W |
| R136 | 1-215-445-00 | s | METAL 10K 1% 1/6W |
| R137 | 1-216-383-11 | s | METAL 0.33 5% 3W |
| R138 | 1-215-445-00 | s | METAL 10K 1% 1/6W |
| R139 | 1-215-445-00 | s | METAL 10K 1% 1/6W |
| R143 | 1-215-445-00 | s | METAL 10K 1% 1/6W |
| R144 | 1-215-469-00 | s | METAL 100K 1% 1/6W |
| R147 | 1-215-421-00 | s | METAL 1K 1% 1/6W |
| R148 | 1-215-445-00 | s | METAL 10K 1% 1/6W |
| R149 | 1-215-461-00 | s | METAL 47K 1% 1/6W |
| R150 | 1-215-445-00 | s | METAL 10K 1% 1/6W |
| R152 | 1-215-447-00 | s | METAL 12K 1% 1/6W |
| R153 | 1-215-455-00 | s | METAL 27K 1% 1/6W |
| R154 | 1-215-421-00 | s | METAL 1K 1% 1/6W |
| R155 | 1-215-422-00 | s | METAL 1.1K 1% 1/6W |
| R156 | 1-215-476-00 | s | METAL 200K 1% 1/6W |
| R157 | 1-249-429-11 | s | CARBON 10K 5% 1/4W |
| R158 | 1-215-437-00 | s | METAL 4.7K 1% 1/6W |
| R159 | 1-215-429-00 | s | METAL 2.2K 1% 1/6W |
| R160 | 1-215-429-00 | s | METAL 2.2K 1% 1/6W |
| R161 | 1-215-460-00 | s | METAL 43K 1% 1/6W |
| R162 | 1-249-417-11 | s | CARBON 1K 5% 1/4W |
| R163 | 1-215-406-00 | s | METAL 240 1% 1/6W |
| R164 | 1-215-406-00 | s | METAL 240 1% 1/6W |
| R165 | 1-215-406-00 | s | METAL 240 1% 1/6W |
| R166 | 1-215-406-00 | s | METAL 240 1% 1/6W |
| R167 | 1-215-406-00 | s | METAL 240 1% 1/6W |
| R168 | 1-215-406-00 | s | METAL 240 1% 1/6W |
| R169 | 1-215-438-00 | s | METAL 5.1K 1% 1/6W |
| R170 | 1-215-445-00 | s | METAL 10K 1% 1/6W |
| R171 | 1-215-445-00 | s | METAL 10K 1% 1/6W |
| R172 | 1-215-437-00 | s | METAL 4.7K 1% 1/6W |

## (CD-37 BOARD)

| Ref. No. or Q'ty | Part No. | SP | Description |
|---|---|---|---|
| R173 | 1-249-417-11 | s | CARBON 1K 5% 1/4W |
| R174 | 1-215-445-00 | s | METAL 10K 1% 1/6W |
| R175 | 1-215-467-00 | s | METAL 82K 1% 1/6W |
| R176 | 1-215-447-00 | s | METAL 12K 1% 1/6W |
| R177 | 1-215-445-00 | s | METAL 10K 1% 1/6W |
| R178 | 1-215-438-00 | s | METAL 5.1K 1% 1/6W |
| R179 | 1-215-438-00 | s | METAL 5.1K 1% 1/6W |
| R180 | 1-215-445-00 | s | METAL 10K 1% 1/6W |
| R181 | 1-215-447-00 | s | METAL 12K 1% 1/6W |
| R184 | 1-215-430-00 | s | METAL 2.4K 1% 1/6W |
| R186 | 1-249-388-11 | s | CARBON 3.9 5% 1/4W |
| R187 | ⚠1-247-718-11 | s | CARBON 2.7K 5% 1/4W |
| R188 | 1-215-452-00 | s | METAL 20K 1% 1/6W |
| R200 | 1-216-995-11 | s | METAL 820 1% 10W |
| R202 | 1-215-447-00 | s | METAL 12K 1% 1/6W |
| R203 | 1-215-449-00 | s | METAL 15K 1% 1/6W |
| R204 | 1-215-437-00 | s | METAL 4.7K 1% 1/6W |
| R205 | 1-215-473-00 | s | METAL 150K 1% 1/6W |
| R206 | 1-215-445-00 | s | METAL 10K 1% 1/6W |
| R207 | 1-215-445-00 | s | METAL 10K 1% 1/6W |
| R208 | 1-215-445-00 | s | METAL 10K 1% 1/6W |
| R209 | 1-215-445-00 | s | METAL 10K 1% 1/6W |
| R210 | 1-215-445-00 | s | METAL 10K 1% 1/6W |
| R211 | 1-215-459-00 | s | METAL 39K 1% 1/6W |
| R212 | 1-215-462-00 | s | METAL 51K 1% 1/6W |
| R213 | 1-249-421-11 | s | CARBON 2.2K 5% 1/4W |
| R214 | 1-249-401-11 | s | CARBON 47 5% 1/4W |
| R215 | 1-215-469-00 | s | METAL 100K 1% 1/6W |
| RB1 | 1-231-525-00 | s | RESISTOR BLOCK 4.7Kx4 |
| RB2 | 1-231-450-00 | s | RESISTOR BLOCK 3.3Kx8 |
| RB3 | 1-231-449-00 | s | RESISTOR BLOCK 620x8 |
| RB4 | 1-231-410-00 | s | RESISTOR BLOCK 10Kx8 |

## CH-23 BOARD

| Ref. No. or Q'ty | Part No. | SP | Description |
|---|---|---|---|
| CN10 | 1-564-930-11 | o | CONNECTOR, DIL 16P, MALE |
| L5 | 1-410-509-11 | s | INDUCTOR 10uH |

## CN-186 BOARD

| Ref. No. or Q'ty | Part No. | SP | Description |
|---|---|---|---|
| 1pc | 1-621-131-11 | o | PRINTED CIRCUIT BOARD, CN-186 |
| CN401 | 1-560-300-00 | o | CONNECTOR, IL 3P, MALE |
| CN402 | 1-560-300-00 | o | CONNECTOR, IL 3P, MALE |
| CN403 | 1-560-300-00 | o | CONNECTOR, IL 3P, MALE |
| CP1 | 1-162-617-11 | s | CERAMIC 0.022 50V |

## DE-18 BOARD

| Ref. No. or Q'ty | Part No. | SP | Description |
|---|---|---|---|
| 1pc | 1-560-298-00 | o | CONTACT, IL, FEMALE AWG22-28 |
| CN003 | 1-509-986-00 | o | HOUSING, IL 5P |
| RM1 | 8-745-001-07 | s | DM-230-1 |

## DET-3 BOARD

| Ref. No. or Q'ty | Part No. | SP | Description |
|---|---|---|---|
| 1pc | 1-618-489-11 | o | PRINTED CIRCUIT BOARD, DET-3 |
| 1pc | 3-673-694-00 | o | HOLDER, DME |
| 1pc | 7-685-533-14 | s | SCREW +BTP 2.6X6 TYPE2 N-S |
| C1 | 1-102-074-00 | s | CERAMIC 0.001uF 10% 50V |
| C2 | 1-126-154-11 | s | ELECT 47uF 20% 6.3V |
| CN1 | 1-506-485-11 | s | CONNECTOR, 6P, MALE |
| D1 | 8-719-200-02 | s | DIODE 10E2 |
| DME1 | 8-745-001-00 | s | DM-211A |
| IC1 | 8-759-103-93 | s | IC UPC393C |
| R1 | 1-247-887-00 | s | CARBON 220K 5% 1/4W |
| R2 | 1-249-425-11 | s | CARBON 4.7K 5% 1/4W |
| R3 | 1-249-425-11 | s | CARBON 4.7K 5% 1/4W |
| R4 | 1-247-887-00 | s | CARBON 220K 5% 1/4W |
| R5 | 1-215-429-00 | s | METAL 2.2K 1% 1/6W |
| R6 | 1-215-429-00 | s | METAL 2.2K 1% 1/6W |
| R7 | 1-215-429-00 | s | METAL 2.2K 1% 1/6W |
| R8 | 1-215-429-00 | s | METAL 2.2K 1% 1/6W |
| RV1 | 1-228-469-00 | s | RES, ADJ, METAL 200 |
| RV2 | 1-228-469-00 | s | RES, ADJ, METAL 200 |

## DIF-2 BOARD

| Ref. No. or Q'ty | Part No. | SP | Description |
|---|---|---|---|
| 1pc | A-6021-009-A | o | MOUNTED CIRCUIT BOARD, DIF-2 |
| 4pcs | 7-682-948-01 | s | SCREW +PSW 3X8 |
| 4pcs | 7-628-254-40 | s | SCREW +PS 2.6X12 |
| 4pcs | 7-622-207-05 | s | N 2.6, TYPE 2 |
| 2pcs | 3-576-921-00 | s | SPRING, COMPRESSION |
| 2pcs | 3-714-855-21 | o | SPACER, REAR PANEL |
| 2pcs | 3-845-334-11 | s | SCREW, ORNAMENTAL |
| 2pcs | 7-623-956-41 | s | WASHER 5.0, FIBER |
| 3pcs | 7-682-948-01 | s | SCREW +PSW 3X8 |
| 2pcs | 7-688-004-01 | s | W 4, SMALL |
| 4pcs | 7-623-953-41 | s | WASHER 2.6, FIBER |
| C1 | 1-124-477-11 | s | ELECT 47uF 20% 25V |
| C2 | 1-161-051-00 | s | CERAMIC 0.01uF 10% 50V |
| C3 | 1-161-051-00 | s | CERAMIC 0.01uF 10% 50V |
| C4 | 1-124-477-11 | s | ELECT 47uF 20% 25V |
| C5 | 1-161-051-00 | s | CERAMIC 0.01uF 10% 50V |
| C6 | 1-161-051-00 | s | CERAMIC 0.01uF 10% 50V |
| C8 | 1-161-051-00 | s | CERAMIC 0.01uF 10% 50V |
| C9 | 1-161-051-00 | s | CERAMIC 0.01uF 10% 50V |
| C10 | 1-161-051-00 | s | CERAMIC 0.01uF 10% 50V |
| C11 | 1-161-051-00 | s | CERAMIC 0.01uF 10% 50V |
| C12 | 1-161-051-00 | s | CERAMIC 0.01uF 10% 50V |
| C13 | 1-161-051-00 | s | CERAMIC 0.01uF 10% 50V |
| C14 | 1-161-051-00 | s | CERAMIC 0.01uF 10% 50V |
| C15 | 1-161-051-00 | s | CERAMIC 0.01uF 10% 50V |
| C16 | 1-161-051-00 | s | CERAMIC 0.01uF 10% 50V |
| C17 | 1-161-051-00 | s | CERAMIC 0.01uF 10% 50V |
| C18 | 1-161-051-00 | s | CERAMIC 0.01uF 10% 50V |
| C19 | 1-161-051-00 | s | CERAMIC 0.01uF 10% 50V |
| C20 | 1-161-051-00 | s | CERAMIC 0.01uF 10% 50V |
| C21 | 1-161-051-00 | s | CERAMIC 0.01uF 10% 50V |
| C22 | 1-161-051-00 | s | CERAMIC 0.01uF 10% 50V |
| C23 | 1-161-051-00 | s | CERAMIC 0.01uF 10% 50V |
| C24 | 1-161-051-00 | s | CERAMIC 0.01uF 10% 50V |
| C25 | 1-161-051-00 | s | CERAMIC 0.01uF 10% 50V |
| C26 | 1-161-051-00 | s | CERAMIC 0.01uF 10% 50V |
| C27 | 1-161-051-00 | s | CERAMIC 0.01uF 10% 50V |
| C28 | 1-161-051-00 | s | CERAMIC 0.01uF 10% 50V |
| C29 | 1-161-051-00 | s | CERAMIC 0.01uF 10% 50V |
| C30 | 1-161-051-00 | s | CERAMIC 0.01uF 10% 50V |
| C31 | 1-161-051-00 | s | CERAMIC 0.01uF 10% 50V |
| C32 | 1-161-051-00 | s | CERAMIC 0.01uF 10% 50V |
| C33 | 1-161-051-00 | s | CERAMIC 0.01uF 10% 50V |
| C34 | 1-161-051-00 | s | CERAMIC 0.01uF 10% 50V |
| C35 | 1-161-051-00 | s | CERAMIC 0.01uF 10% 50V |
| C36 | 1-161-051-00 | s | CERAMIC 0.01uF 10% 50V |
| C37 | 1-161-051-00 | s | CERAMIC 0.01uF 10% 50V |
| C38 | 1-161-051-00 | s | CERAMIC 0.01uF 10% 50V |
| C40 | 1-161-051-00 | s | CERAMIC 0.01uF 10% 50V |
| C41 | 1-161-051-00 | s | CERAMIC 0.01uF 10% 50V |
| C42 | 1-161-051-00 | s | CERAMIC 0.01uF 10% 50V |
| C43 | 1-161-051-00 | s | CERAMIC 0.01uF 10% 50V |
| C44 | 1-161-051-00 | s | CERAMIC 0.01uF 10% 50V |
| C45 | 1-161-051-00 | s | CERAMIC 0.01uF 10% 50V |
| C46 | 1-161-051-00 | s | CERAMIC 0.01uF 10% 50V |
| C47 | 1-161-051-00 | s | CERAMIC 0.01uF 10% 50V |
| C48 | 1-161-051-00 | s | CERAMIC 0.01uF 10% 50V |
| C49 | 1-161-051-00 | s | CERAMIC 0.01uF 10% 50V |

(DIF-2 BOARD)

| Ref. No.<br>or Q'ty | Part No. | SP | Description |
|---|---|---|---|
| C50 | 1-161-051-00 | s | CERAMIC 0.01uF 10% 50V |
| C51 | 1-161-051-00 | s | CERAMIC 0.01uF 10% 50V |
| C52 | 1-161-051-00 | s | CERAMIC 0.01uF 10% 50V |
| C53 | 1-161-051-00 | s | CERAMIC 0.01uF 10% 50V |
| CN1 | 1-563-455-11 | s | CONNECTOR, 44P, MALE |
| CN2 | 1-563-455-11 | s | CONNECTOR, 44P, MALE |
| CN3 | 1-563-781-21 | s | CONNECTOR, D-SUB 50P, FEMALE |
| CN4 | 1-563-781-21 | s | CONNECTOR, D-SUB 50P, FEMALE |
| FB1 | 1-535-178-00 | s | BEAD, FERRITE |
| FB2 | 1-535-178-00 | s | BEAD, FERRITE |
| IC1 | 8-759-002-72 | s | IC MC10H116L |
| IC2 | 8-759-002-72 | s | IC MC10H116L |
| IC3 | 8-759-002-72 | s | IC MC10H116L |
| IC4 | 8-759-002-72 | s | IC MC10H116L |
| IC5 | 8-759-002-72 | s | IC MC10H116L |
| IC6 | 8-759-002-72 | s | IC MC10H116L |
| IC7 | 8-759-002-72 | s | IC MC10H116L |
| IC8 | 8-759-002-72 | s | IC MC10H116L |
| IC9 | 8-759-926-31 | s | IC AM26LS31PC |
| IC10 | 8-759-923-72 | s | IC SN75157P |
| IC11 | 8-759-002-80 | s | IC MC10H131L |
| IC12 | 8-759-002-80 | s | IC MC10H131L |
| IC13 | 8-759-002-80 | s | IC MC10H131L |
| IC14 | 8-759-002-80 | s | IC MC10H131L |
| IC15 | 8-759-002-71 | s | IC MC10H115L |
| IC16 | 8-759-002-71 | s | IC MC10H115L |
| IC17 | 8-759-002-72 | s | IC MC10H116L |
| L1 | 1-421-329-00 | s | COIL, CHOKE |
| L2 | 1-421-329-00 | s | COIL, CHOKE |
| R1 | 1-214-533-00 | s | METAL 100 1% 1/8W |
| R2 | 1-214-533-00 | s | METAL 100 1% 1/8W |
| R6 | 1-214-525-00 | s | METAL 47 1% 1/8W |
| R7 | 1-214-525-00 | s | METAL 47 1% 1/8W |
| R8 | 1-214-525-00 | s | METAL 47 1% 1/8W |
| R9 | 1-214-525-00 | s | METAL 47 1% 1/8W |
| R10 | 1-214-525-00 | s | METAL 47 1% 1/8W |
| R11 | 1-214-525-00 | s | METAL 47 1% 1/8W |
| R12 | 1-214-525-00 | s | METAL 47 1% 1/8W |
| R13 | 1-214-525-00 | s | METAL 47 1% 1/8W |
| R14 | 1-214-525-00 | s | METAL 47 1% 1/8W |
| R15 | 1-214-525-00 | s | METAL 47 1% 1/8W |
| R16 | 1-214-525-00 | s | METAL 47 1% 1/8W |
| R17 | 1-214-525-00 | s | METAL 47 1% 1/8W |
| R18 | 1-214-525-00 | s | METAL 47 1% 1/8W |
| R19 | 1-214-525-00 | s | METAL 47 1% 1/8W |
| R20 | 1-214-525-00 | s | METAL 47 1% 1/8W |
| R21 | 1-214-525-00 | s | METAL 47 1% 1/8W |
| R22 | 1-214-525-00 | s | METAL 47 1% 1/8W |
| R23 | 1-214-525-00 | s | METAL 47 1% 1/8W |
| R24 | 1-214-525-00 | s | METAL 47 1% 1/8W |
| R25 | 1-214-525-00 | s | METAL 47 1% 1/8W |
| R26 | 1-214-525-00 | s | METAL 47 1% 1/8W |
| R27 | 1-214-525-00 | s | METAL 47 1% 1/8W |
| R28 | 1-214-525-00 | s | METAL 47 1% 1/8W |
| R29 | 1-214-525-00 | s | METAL 47 1% 1/8W |
| R30 | 1-214-549-00 | s | METAL 470 1% 1/8W |
| R31 | 1-214-549-00 | s | METAL 470 1% 1/8W |

(DIF-2 BOARD)

| Ref. No.<br>or Q'ty | Part No. | SP | Description |
|---|---|---|---|
| R32 | 1-214-529-00 | s | METAL 68 1% 1/8W |
| R33 | 1-214-529-00 | s | METAL 68 1% 1/8W |
| R35 | 1-214-525-00 | s | METAL 47 1% 1/8W |
| R36 | 1-214-525-00 | s | METAL 47 1% 1/8W |
| R37 | 1-214-525-00 | s | METAL 47 1% 1/8W |
| R38 | 1-214-525-00 | s | METAL 47 1% 1/8W |
| R39 | 1-214-525-00 | s | METAL 47 1% 1/8W |
| R40 | 1-214-525-00 | s | METAL 47 1% 1/8W |
| R41 | 1-214-525-00 | s | METAL 47 1% 1/8W |
| R42 | 1-214-525-00 | s | METAL 47 1% 1/8W |
| R43 | 1-214-529-00 | s | METAL 68 1% 1/8W |
| R44 | 1-214-529-00 | s | METAL 68 1% 1/8W |
| R45 | 1-214-529-00 | s | METAL 68 1% 1/8W |
| R46 | 1-214-529-00 | s | METAL 68 1% 1/8W |
| R47 | 1-214-529-00 | s | METAL 68 1% 1/8W |
| R48 | 1-214-529-00 | s | METAL 68 1% 1/8W |
| R49 | 1-214-529-00 | s | METAL 68 1% 1/8W |
| R50 | 1-214-529-00 | s | METAL 68 1% 1/8W |
| R51 | 1-214-529-00 | s | METAL 68 1% 1/8W |
| R52 | 1-214-529-00 | s | METAL 68 1% 1/8W |
| R53 | 1-214-529-00 | s | METAL 68 1% 1/8W |
| R54 | 1-214-529-00 | s | METAL 68 1% 1/8W |
| R55 | 1-214-529-00 | s | METAL 68 1% 1/8W |
| R56 | 1-214-529-00 | s | METAL 68 1% 1/8W |
| R57 | 1-214-529-00 | s | METAL 68 1% 1/8W |
| R58 | 1-214-529-00 | s | METAL 68 1% 1/8W |
| R59 | 1-214-537-00 | s | METAL 150 1% 1/8W |
| R60 | 1-214-533-00 | s | METAL 100 1% 1/8W |
| RB1 | 1-236-321-11 | s | RESISTOR BLOCK 68X4 |
| RB2 | 1-236-321-11 | s | RESISTOR BLOCK 68X4 |
| RB3 | 1-236-321-11 | s | RESISTOR BLOCK 68X4 |
| RB4 | 1-231-499-00 | s | RESISTOR BLOCK 390X4 |
| RB5 | 1-231-499-00 | s | RESISTOR BLOCK 390X4 |
| RB6 | 1-236-321-11 | s | RESISTOR BLOCK 68X4 |
| RB7 | 1-236-321-11 | s | RESISTOR BLOCK 68X4 |
| RB8 | 1-231-499-00 | s | RESISTOR BLOCK 390X4 |
| RB9 | 1-231-499-00 | s | RESISTOR BLOCK 390X4 |
| RB10 | 1-236-321-11 | s | RESISTOR BLOCK 68X4 |
| RB11 | 1-236-321-11 | s | RESISTOR BLOCK 68X4 |
| RB12 | 1-236-321-11 | s | RESISTOR BLOCK 68X4 |
| RB13 | 1-231-499-00 | s | RESISTOR BLOCK 390X4 |
| RB14 | 1-231-499-00 | s | RESISTOR BLOCK 390X4 |
| RB15 | 1-236-324-11 | s | RESISTOR BLOCK 56X2 |
| RB16 | 1-231-499-00 | s | RESISTOR BLOCK 390X4 |
| RB17 | 1-231-499-00 | s | RESISTOR BLOCK 390X4 |
| RB18 | 1-231-501-00 | s | RESISTOR BLOCK 470x4 |
| RB19 | 1-231-501-00 | s | RESISTOR BLOCK 470x4 |
| RB20 | 1-231-501-00 | s | RESISTOR BLOCK 470x4 |
| RB21 | 1-231-501-00 | s | RESISTOR BLOCK 470x4 |
| RB22 | 1-231-493-00 | s | RESISTOR BLOCK 220X4 |
| RB23 | 1-231-489-11 | s | RESISTOR BLOCK 150X4 |
| RB24 | 1-236-320-11 | s | RESISTOR BLOCK 56X4 |
| RB25 | 1-236-320-11 | s | RESISTOR BLOCK 56X4 |
| RB26 | 1-231-489-11 | s | RESISTOR BLOCK 150X4 |
| RB27 | 1-231-493-00 | s | RESISTOR BLOCK 220X4 |
| RB28 | 1-236-320-11 | s | RESISTOR BLOCK 56X4 |
| RB29 | 1-236-320-11 | s | RESISTOR BLOCK 56X4 |
| RB30 | 1-231-503-00 | s | RESISTOR BLOCK 560x4 |
| RB31 | 1-231-503-00 | s | RESISTOR BLOCK 560x4 |

(DIF-2 BOARD)

| Ref. No. or Q'ty | Part No. | SP | Description |
|---|---|---|---|
| RB32 | 1-231-503-00 | s | RESISTOR BLOCK 560x4 |
| RB33 | 1-231-503-00 | s | RESISTOR BLOCK 560x4 |

## DP-63 BOARD

| Ref. No. or Q'ty | Part No. | SP | Description |
|---|---|---|---|
| 1pc | 1-563-088-11 | o | CONTACT, FEMALE, AWG24-30 |
| 1pc | 1-564-831-11 | o | CONTACT, FEMALE |
| 1pc | 1-621-121-11 | o | PRINTED CIRCUIT BOARD, DP-63 |
| 3pcs | 3-171-287-01 | o | HOLDER, DIA. 5 LED |
| CN705 | 1-562-153-11 | o | HOUSING, 8P |
| CN706 | 1-562-155-11 | o | HOUSING, 10P |
| D1 | 8-719-911-19 | s | DIODE 1SS119 |
| D2 | 8-719-911-19 | s | DIODE 1SS119 |
| D3 | 8-719-911-19 | s | DIODE 1SS119 |
| D4 | 8-719-911-19 | s | DIODE 1SS119 |
| D5 | 8-719-911-19 | s | DIODE 1SS119 |
| D6 | 8-719-911-19 | s | DIODE 1SS119 |
| D7 | 8-719-310-60 | s | DIODE SEL1510C-C |
| D8 | 8-719-905-56 | s | LED EBR5504S, RED |
| D9 | 8-719-310-60 | s | DIODE SEL1510C-C |
| R1 | 1-249-414-11 | s | CARBON 560 5% 1/4W |
| R2 | 1-249-414-11 | s | CARBON 560 5% 1/4W |
| R3 | 1-249-414-11 | s | CARBON 560 5% 1/4W |
| R4 | 1-249-414-11 | s | CARBON 560 5% 1/4W |
| R5 | 1-249-414-11 | s | CARBON 560 5% 1/4W |
| R6 | 1-249-414-11 | s | CARBON 560 5% 1/4W |
| R7 | 1-249-414-11 | s | CARBON 560 5% 1/4W |
| R8 | 1-249-407-11 | s | CARBON 150 5% 1/4W |
| R9 | 1-249-414-11 | s | CARBON 560 5% 1/4W |
| R10 | 1-249-414-11 | s | CARBON 560 5% 1/4W |
| R11 | 1-249-407-11 | s | CARBON 150 5% 1/4W |
| R12 | 1-249-414-11 | s | CARBON 560 5% 1/4W |
| S1 | 1-554-039-11 | s | SWITCH, PUSH, WITH LED |
| S2 | 1-554-048-00 | s | SWITCH, PUSH, WITH LED |
| S3 | 1-554-039-11 | s | SWITCH, PUSH, WITH LED |
| S4 | 1-554-048-00 | s | SWITCH, PUSH, WITH LED |
| S5 | 1-554-039-11 | s | SWITCH, PUSH, WITH LED |
| S6 | 1-571-280-11 | s | SWITCH, PUSH, WITH LED |

## DRC-1 BOARD

| Ref. No. or Q'ty | Part No. | SP | Description |
|---|---|---|---|
| 1pc | A-6011-129-A | o | MOUNTED CIRCUIT BOARD, DRC-1 |
| 1pc | 3-731-259-01 | o | LID (1), DRC SHIELD |
| 1pc | 3-731-272-01 | o | LID (2), SHIELD, DRC |
| 2pcs | 3-714-634-01 | o | LEVER, PC BOARD |
| 2pcs | 3-714-691-01 | o | PIN, SPRING |
| 4pcs | 7-622-207-05 | s | N 2.6, TYPE 2 |
| 4pcs | 7-628-254-40 | s | SCREW +PS 2.6X12 |
| 9pcs | 7-682-948-01 | s | SCREW +PSW 3X8 |
| 2pcs | 7-685-533-19 | s | SCREW +BTP 2.6X6 TYPE2 N-S |
| 1pc | 4-352-844-01 | o | PIN, LEAD, COATING |
| 2pcs | 7-682-648-09 | s | SCREW +PS 3X8 |
| 2pcs | 7-684-023-04 | s | N 3, TYPE 2 |
| C1 | 1-124-484-11 | s | ELECT 220 20% 35V |
| C2 | 1-161-055-00 | s | CERAMIC 0.022uF 10% 50V |
| C3 | 1-161-055-00 | s | CERAMIC 0.022uF 10% 50V |
| C4 | 1-124-484-11 | s | ELECT 220 20% 35V |
| C5 | 1-161-055-00 | s | CERAMIC 0.022uF 10% 50V |
| C6 | 1-124-484-11 | s | ELECT 220 20% 35V |
| C7 | 1-161-055-00 | s | CERAMIC 0.022uF 10% 50V |
| C8 | 1-161-055-00 | s | CERAMIC 0.022uF 10% 50V |
| C9 | 1-161-051-00 | s | CERAMIC 0.01uF 10% 50V |
| C10 | 1-161-051-00 | s | CERAMIC 0.01uF 10% 50V |
| C11 | 1-161-051-00 | s | CERAMIC 0.01uF 10% 50V |
| C12 | 1-161-051-00 | s | CERAMIC 0.01uF 10% 50V |
| C13 | 1-161-051-00 | s | CERAMIC 0.01uF 10% 50V |
| C14 | 1-161-051-00 | s | CERAMIC 0.01uF 10% 50V |
| C15 | 1-161-051-00 | s | CERAMIC 0.01uF 10% 50V |
| C16 | 1-161-051-00 | s | CERAMIC 0.01uF 10% 50V |
| C17 | 1-161-051-00 | s | CERAMIC 0.01uF 10% 50V |
| C18 | 1-161-051-00 | s | CERAMIC 0.01uF 10% 50V |
| C19 | 1-161-051-00 | s | CERAMIC 0.01uF 10% 50V |
| C20 | 1-161-051-00 | s | CERAMIC 0.01uF 10% 50V |
| C21 | 1-161-051-00 | s | CERAMIC 0.01uF 10% 50V |
| C22 | 1-161-055-00 | s | CERAMIC 0.022uF 10% 50V |
| C23 | 1-161-055-00 | s | CERAMIC 0.022uF 10% 50V |
| C24 | 1-124-484-11 | s | ELECT 220 20% 35V |
| C25 | 1-124-484-11 | s | ELECT 220 20% 35V |
| C26 | 1-161-051-00 | s | CERAMIC 0.01uF 10% 50V |
| C27 | 1-161-051-00 | s | CERAMIC 0.01uF 10% 50V |
| C28 | 1-131-351-00 | s | TANTALUM 4.7uF 10% 35V |
| C29 | 1-131-351-00 | s | TANTALUM 4.7uF 10% 35V |
| C30 | 1-131-351-00 | s | TANTALUM 4.7uF 10% 35V |
| C31 | 1-131-351-00 | s | TANTALUM 4.7uF 10% 35V |
| C32 | 1-161-051-00 | s | CERAMIC 0.01uF 10% 50V |
| C33 | 1-161-051-00 | s | CERAMIC 0.01uF 10% 50V |
| C34 | 1-131-587-11 | s | TANTALUM 0.68MF 5% 35V |
| C35 | 1-131-587-11 | s | TANTALUM 0.68MF 5% 35V |
| C36 | 1-161-051-00 | s | CERAMIC 0.01uF 10% 50V |
| C37 | 1-131-587-11 | s | TANTALUM 0.68MF 5% 35V |
| C38 | 1-131-587-11 | s | TANTALUM 0.68MF 5% 35V |
| C39 | 1-161-051-00 | s | CERAMIC 0.01uF 10% 50V |
| C40 | 1-161-051-00 | s | CERAMIC 0.01uF 10% 50V |
| C101 | 1-161-051-00 | s | CERAMIC 0.01uF 10% 50V |
| C102 | 1-161-051-00 | s | CERAMIC 0.01uF 10% 50V |
| C103 | 1-162-722-11 | s | CERAMIC 330PF 1% 50V |
| C104 | 1-162-722-11 | s | CERAMIC 330PF 1% 50V |
| C105 | 1-161-051-00 | s | CERAMIC 0.01uF 10% 50V |
| C106 | 1-162-714-11 | s | CERAMIC 150PF 1% 50V |

| Ref. No.<br>or Q'ty | Part No. | SP | Description |
|---|---|---|---|
| C107 | 1-161-051-00 | s | CERAMIC 0.01uF 10% 50V |
| C108 | 1-162-714-11 | s | CERAMIC 150PF 1% 50V |
| C109 | 1-161-485-00 | s | CERAMIC 0.1uF 50V |
| C110 | 1-124-598-11 | s | ELECT 22uF 20% 25V |
| C111 | 1-124-598-11 | s | ELECT 22uF 20% 25V |
| C112 | 1-161-485-00 | s | CERAMIC 0.1uF 50V |
| C113 | 1-161-485-00 | s | CERAMIC 0.1uF 50V |
| C114 | 1-161-051-00 | s | CERAMIC 0.01uF 10% 50V |
| C115 | 1-161-897-11 | s | CERAMIC 0.33uF 50V |
| C116 | 1-161-051-00 | s | CERAMIC 0.01uF 10% 50V |
| C117 | 1-161-485-00 | s | CERAMIC 0.1uF 50V |
| C118 | 1-161-051-00 | s | CERAMIC 0.01uF 10% 50V |
| C119 | 1-161-051-00 | s | CERAMIC 0.01uF 10% 50V |
| C120 | 1-161-051-00 | s | CERAMIC 0.01uF 10% 50V |
| C121 | 1-107-207-00 | s | MICA 16PF 5% 500V |
| C122 | 1-107-045-00 | s | MICA 3.9PF 500V |
| C123 | 1-161-051-00 | s | CERAMIC 0.01uF 10% 50V |
| C124 | 1-161-897-11 | s | CERAMIC 0.33uF 50V |
| C125 | 1-161-051-00 | s | CERAMIC 0.01uF 10% 50V |
| C126 | 1-107-047-00 | s | MICA 5.6PF 500V |
| C127 | 1-161-051-00 | s | CERAMIC 0.01uF 10% 50V |
| C128 | 1-161-051-00 | s | CERAMIC 0.01uF 10% 50V |
| C129 | 1-161-051-00 | s | CERAMIC 0.01uF 10% 50V |
| C130 | 1-161-051-00 | s | CERAMIC 0.01uF 10% 50V |
| C131 | 1-107-210-00 | s | MICA 22PF 5% 500V |
| C132 | 1-162-728-11 | s | CERAMIC 560PF 1% 50V |
| C133 | 1-161-051-00 | s | CERAMIC 0.01uF 10% 50V |
| C134 | 1-161-051-00 | s | CERAMIC 0.01uF 10% 50V |
| C135 | 1-107-159-00 | s | MICA 33PF 5% 500V |
| C136 | 1-102-074-00 | s | CERAMIC 0.001uF 10% 50V |
| C137 | 1-161-051-00 | s | CERAMIC 0.01uF 10% 50V |
| C138 | 1-161-051-00 | s | CERAMIC 0.01uF 10% 50V |
| C139 | 1-130-481-00 | s | MYLAR 0.0068uF 5% 50V |
| C140 | 1-161-051-00 | s | CERAMIC 0.01uF 10% 50V |
| C141 | 1-161-897-11 | s | CERAMIC 0.33uF 50V |
| C142 | 1-161-897-11 | s | CERAMIC 0.33uF 50V |
| C143 | 1-124-598-11 | s | ELECT 22uF 20% 25V |
| C144 | 1-161-051-00 | s | CERAMIC 0.01uF 10% 50V |
| C145 | 1-161-051-00 | s | CERAMIC 0.01uF 10% 50V |
| C146 | 1-107-046-00 | s | MICA 4.7PF 500V |
| C147 | 1-161-051-00 | s | CERAMIC 0.01uF 10% 50V |
| C148 | 1-161-051-00 | s | CERAMIC 0.01uF 10% 50V |
| C149 | 1-161-051-00 | s | CERAMIC 0.01uF 10% 50V |
| C150 | 1-161-485-00 | s | CERAMIC 0.1uF 50V |
| C151 | 1-161-051-00 | s | CERAMIC 0.01uF 10% 50V |
| C152 | 1-161-051-00 | s | CERAMIC 0.01uF 10% 50V |
| C153 | 1-161-051-00 | s | CERAMIC 0.01uF 10% 50V |
| C154 | 1-107-042-00 | s | MICA 2.2PF 500V |
| C156 | 1-161-051-00 | s | CERAMIC 0.01uF 10% 50V |
| C157 | 1-107-157-00 | s | MICA 27PF 5% 500V |
| C158 | 1-107-206-00 | s | MICA 15PF 5% 500V |
| C159 | 1-161-051-00 | s | CERAMIC 0.01uF 10% 50V |
| C160 | 1-161-051-00 | s | CERAMIC 0.01uF 10% 50V |
| C161 | 1-161-485-00 | s | CERAMIC 0.1uF 50V |
| C162 | 1-102-074-00 | s | CERAMIC 0.001uF 10% 50V |
| C163 | 1-102-074-00 | s | CERAMIC 0.001uF 10% 50V |
| C164 | 1-161-051-00 | s | CERAMIC 0.01uF 10% 50V |
| C165 | 1-161-051-00 | s | CERAMIC 0.01uF 10% 50V |
| C166 | 1-124-598-11 | s | ELECT 22uF 20% 25V |

| Ref. No.<br>or Q'ty | Part No. | SP | Description |
|---|---|---|---|
| C167 | 1-161-051-00 | s | CERAMIC 0.01uF 10% 50V |
| C168 | 1-161-051-00 | s | CERAMIC 0.01uF 10% 50V |
| C169 | 1-161-051-00 | s | CERAMIC 0.01uF 10% 50V |
| C170 | 1-124-598-11 | s | ELECT 22uF 20% 25V |
| C171 | 1-161-051-00 | s | CERAMIC 0.01uF 10% 50V |
| C172 | 1-161-051-00 | s | CERAMIC 0.01uF 10% 50V |
| C173 | 1-161-051-00 | s | CERAMIC 0.01uF 10% 50V |
| C174 | 1-161-051-00 | s | CERAMIC 0.01uF 10% 50V |
| C175 | 1-107-046-00 | s | MICA 4.7PF 500V |
| C176 | 1-161-051-00 | s | CERAMIC 0.01uF 10% 50V |
| C177 | 1-161-051-00 | s | CERAMIC 0.01uF 10% 50V |
| C201 | 1-161-051-00 | s | CERAMIC 0.01uF 10% 50V |
| C202 | 1-161-051-00 | s | CERAMIC 0.01uF 10% 50V |
| C203 | 1-162-722-11 | s | CERAMIC 330PF 1% 50V |
| C204 | 1-162-722-11 | s | CERAMIC 330PF 1% 50V |
| C205 | 1-161-051-00 | s | CERAMIC 0.01uF 10% 50V |
| C206 | 1-162-714-11 | s | CERAMIC 150PF 1% 50V |
| C207 | 1-161-051-00 | s | CERAMIC 0.01uF 10% 50V |
| C208 | 1-162-714-11 | s | CERAMIC 150PF 1% 50V |
| C209 | 1-161-485-00 | s | CERAMIC 0.1uF 50V |
| C210 | 1-124-598-11 | s | ELECT 22uF 20% 25V |
| C211 | 1-124-598-11 | s | ELECT 22uF 20% 25V |
| C212 | 1-161-485-00 | s | CERAMIC 0.1uF 50V |
| C213 | 1-161-485-00 | s | CERAMIC 0.1uF 50V |
| C214 | 1-161-051-00 | s | CERAMIC 0.01uF 10% 50V |
| C215 | 1-161-897-11 | s | CERAMIC 0.33uF 50V |
| C216 | 1-161-051-00 | s | CERAMIC 0.01uF 10% 50V |
| C217 | 1-161-485-00 | s | CERAMIC 0.1uF 50V |
| C218 | 1-161-051-00 | s | CERAMIC 0.01uF 10% 50V |
| C219 | 1-161-051-00 | s | CERAMIC 0.01uF 10% 50V |
| C220 | 1-161-051-00 | s | CERAMIC 0.01uF 10% 50V |
| C221 | 1-107-207-00 | s | MICA 16PF 5% 500V |
| C222 | 1-107-045-00 | s | MICA 3.9PF 500V |
| C223 | 1-161-051-00 | s | CERAMIC 0.01uF 10% 50V |
| C224 | 1-161-897-11 | s | CERAMIC 0.33uF 50V |
| C225 | 1-161-051-00 | s | CERAMIC 0.01uF 10% 50V |
| C226 | 1-107-047-00 | s | MICA 5.6PF 500V |
| C227 | 1-161-051-00 | s | CERAMIC 0.01uF 10% 50V |
| C228 | 1-161-051-00 | s | CERAMIC 0.01uF 10% 50V |
| C229 | 1-161-051-00 | s | CERAMIC 0.01uF 10% 50V |
| C230 | 1-161-051-00 | s | CERAMIC 0.01uF 10% 50V |
| C231 | 1-107-210-00 | s | MICA 22PF 5% 500V |
| C232 | 1-162-728-11 | s | CERAMIC 560PF 1% 50V |
| C233 | 1-161-051-00 | s | CERAMIC 0.01uF 10% 50V |
| C234 | 1-161-051-00 | s | CERAMIC 0.01uF 10% 50V |
| C235 | 1-107-159-00 | s | MICA 33PF 5% 500V |
| C236 | 1-102-074-00 | s | CERAMIC 0.001uF 10% 50V |
| C237 | 1-161-051-00 | s | CERAMIC 0.01uF 10% 50V |
| C238 | 1-161-051-00 | s | CERAMIC 0.01uF 10% 50V |
| C239 | 1-130-481-00 | s | MYLAR 0.0068uF 5% 50V |
| C240 | 1-161-051-00 | s | CERAMIC 0.01uF 10% 50V |
| C241 | 1-161-897-11 | s | CERAMIC 0.33uF 50V |
| C242 | 1-161-897-11 | s | CERAMIC 0.33uF 50V |
| C243 | 1-124-598-11 | s | ELECT 22uF 20% 25V |
| C244 | 1-161-051-00 | s | CERAMIC 0.01uF 10% 50V |
| C245 | 1-161-051-00 | s | CERAMIC 0.01uF 10% 50V |
| C246 | 1-107-046-00 | s | MICA 4.7PF 500V |
| C247 | 1-161-051-00 | s | CERAMIC 0.01uF 10% 50V |
| C248 | 1-161-051-00 | s | CERAMIC 0.01uF 10% 50V |

(DRC-1 BOARD)

| Ref. No. or Q'ty | Part No. | SP | Description |
|---|---|---|---|
| C249 | 1-161-051-00 | s | CERAMIC 0.01uF 10% 50V |
| C250 | 1-161-485-00 | s | CERAMIC 0.1uF 50V |
| C251 | 1-161-051-00 | s | CERAMIC 0.01uF 10% 50V |
| C252 | 1-161-051-00 | s | CERAMIC 0.01uF 10% 50V |
| C253 | 1-161-051-00 | s | CERAMIC 0.01uF 10% 50V |
| C254 | 1-107-042-00 | s | MICA 2.2PF 500V |
| C256 | 1-161-051-00 | s | CERAMIC 0.01uF 10% 50V |
| C257 | 1-107-157-00 | s | MICA 27PF 5% 500V |
| C258 | 1-107-206-00 | s | MICA 15PF 5% 500V |
| C259 | 1-161-051-00 | s | CERAMIC 0.01uF 10% 50V |
| C260 | 1-161-051-00 | s | CERAMIC 0.01uF 10% 50V |
| C261 | 1-161-485-00 | s | CERAMIC 0.1uF 50V |
| C262 | 1-102-074-00 | s | CERAMIC 0.001uF 10% 50V |
| C263 | 1-102-074-00 | s | CERAMIC 0.001uF 10% 50V |
| C264 | 1-161-051-00 | s | CERAMIC 0.01uF 10% 50V |
| C265 | 1-161-051-00 | s | CERAMIC 0.01uF 10% 50V |
| C266 | 1-124-598-11 | s | ELECT 22uF 20% 25V |
| C267 | 1-161-051-00 | s | CERAMIC 0.01uF 10% 50V |
| C268 | 1-161-051-00 | s | CERAMIC 0.01uF 10% 50V |
| C269 | 1-161-051-00 | s | CERAMIC 0.01uF 10% 50V |
| C270 | 1-124-598-11 | s | ELECT 22uF 20% 25V |
| C271 | 1-161-051-00 | s | CERAMIC 0.01uF 10% 50V |
| C272 | 1-161-051-00 | s | CERAMIC 0.01uF 10% 50V |
| C273 | 1-161-051-00 | s | CERAMIC 0.01uF 10% 50V |
| C274 | 1-161-051-00 | s | CERAMIC 0.01uF 10% 50V |
| C275 | 1-107-046-00 | s | MICA 4.7PF 500V |
| C301 | 1-161-051-00 | s | CERAMIC 0.01uF 10% 50V |
| C302 | 1-161-051-00 | s | CERAMIC 0.01uF 10% 50V |
| C303 | 1-162-722-11 | s | CERAMIC 330PF 1% 50V |
| C304 | 1-162-722-11 | s | CERAMIC 330PF 1% 50V |
| C305 | 1-161-051-00 | s | CERAMIC 0.01uF 10% 50V |
| C306 | 1-162-714-11 | s | CERAMIC 150PF 1% 50V |
| C307 | 1-161-051-00 | s | CERAMIC 0.01uF 10% 50V |
| C308 | 1-162-714-11 | s | CERAMIC 150PF 1% 50V |
| C309 | 1-161-485-00 | s | CERAMIC 0.1uF 50V |
| C310 | 1-124-598-11 | s | ELECT 22uF 20% 25V |
| C311 | 1-124-598-11 | s | ELECT 22uF 20% 25V |
| C312 | 1-161-485-00 | s | CERAMIC 0.1uF 50V |
| C313 | 1-161-485-00 | s | CERAMIC 0.1uF 50V |
| C314 | 1-161-051-00 | s | CERAMIC 0.01uF 10% 50V |
| C315 | 1-161-897-11 | s | CERAMIC 0.33uF 50V |
| C316 | 1-161-051-00 | s | CERAMIC 0.01uF 10% 50V |
| C317 | 1-161-485-00 | s | CERAMIC 0.1uF 50V |
| C318 | 1-161-051-00 | s | CERAMIC 0.01uF 10% 50V |
| C319 | 1-161-051-00 | s | CERAMIC 0.01uF 10% 50V |
| C320 | 1-161-051-00 | s | CERAMIC 0.01uF 10% 50V |
| C321 | 1-107-207-00 | s | MICA 16PF 5% 500V |
| C322 | 1-107-045-00 | s | MICA 3.9PF 500V |
| C323 | 1-161-051-00 | s | CERAMIC 0.01uF 10% 50V |
| C324 | 1-161-897-11 | s | CERAMIC 0.33uF 50V |
| C325 | 1-161-051-00 | s | CERAMIC 0.01uF 10% 50V |
| C326 | 1-107-047-00 | s | MICA 5.6PF 500V |
| C327 | 1-161-051-00 | s | CERAMIC 0.01uF 10% 50V |
| C328 | 1-161-051-00 | s | CERAMIC 0.01uF 10% 50V |
| C329 | 1-161-051-00 | s | CERAMIC 0.01uF 10% 50V |
| C330 | 1-161-051-00 | s | CERAMIC 0.01uF 10% 50V |
| C331 | 1-107-210-00 | s | MICA 22PF 5% 500V |
| C332 | 1-162-728-11 | s | CERAMIC 560PF 1% 50V |
| C333 | 1-161-051-00 | s | CERAMIC 0.01uF 10% 50V |

(DRC-1 BOARD)

| Ref. No. or Q'ty | Part No. | SP | Description |
|---|---|---|---|
| C334 | 1-161-051-00 | s | CERAMIC 0.01uF 10% 50V |
| C335 | 1-107-159-00 | s | MICA 33PF 5% 500V |
| C336 | 1-102-074-00 | s | CERAMIC 0.001uF 10% 50V |
| C337 | 1-161-051-00 | s | CERAMIC 0.01uF 10% 50V |
| C338 | 1-161-051-00 | s | CERAMIC 0.01uF 10% 50V |
| C339 | 1-130-481-00 | s | MYLAR 0.0068uF 5% 50V |
| C340 | 1-161-051-00 | s | CERAMIC 0.01uF 10% 50V |
| C341 | 1-161-897-11 | s | CERAMIC 0.33uF 50V |
| C342 | 1-161-897-11 | s | CERAMIC 0.33uF 50V |
| C343 | 1-124-598-11 | s | ELECT 22uF 20% 25V |
| C344 | 1-161-051-00 | s | CERAMIC 0.01uF 10% 50V |
| C345 | 1-161-051-00 | s | CERAMIC 0.01uF 10% 50V |
| C346 | 1-107-046-00 | s | MICA 4.7PF 500V |
| C347 | 1-161-051-00 | s | CERAMIC 0.01uF 10% 50V |
| C348 | 1-161-051-00 | s | CERAMIC 0.01uF 10% 50V |
| C349 | 1-161-051-00 | s | CERAMIC 0.01uF 10% 50V |
| C350 | 1-161-485-00 | s | CERAMIC 0.1uF 50V |
| C351 | 1-161-051-00 | s | CERAMIC 0.01uF 10% 50V |
| C352 | 1-161-051-00 | s | CERAMIC 0.01uF 10% 50V |
| C353 | 1-161-051-00 | s | CERAMIC 0.01uF 10% 50V |
| C354 | 1-107-042-00 | s | MICA 2.2PF 500V |
| C356 | 1-161-051-00 | s | CERAMIC 0.01uF 10% 50V |
| C357 | 1-107-157-00 | s | MICA 27PF 5% 500V |
| C358 | 1-107-206-00 | s | MICA 15PF 5% 500V |
| C359 | 1-161-051-00 | s | CERAMIC 0.01uF 10% 50V |
| C360 | 1-161-051-00 | s | CERAMIC 0.01uF 10% 50V |
| C361 | 1-161-485-00 | s | CERAMIC 0.1uF 50V |
| C362 | 1-102-074-00 | s | CERAMIC 0.001uF 10% 50V |
| C363 | 1-102-074-00 | s | CERAMIC 0.001uF 10% 50V |
| C364 | 1-161-051-00 | s | CERAMIC 0.01uF 10% 50V |
| C365 | 1-161-051-00 | s | CERAMIC 0.01uF 10% 50V |
| C366 | 1-124-598-11 | s | ELECT 22uF 20% 25V |
| C367 | 1-161-051-00 | s | CERAMIC 0.01uF 10% 50V |
| C368 | 1-161-051-00 | s | CERAMIC 0.01uF 10% 50V |
| C369 | 1-161-051-00 | s | CERAMIC 0.01uF 10% 50V |
| C370 | 1-124-598-11 | s | ELECT 22uF 20% 25V |
| C371 | 1-161-051-00 | s | CERAMIC 0.01uF 10% 50V |
| C372 | 1-161-051-00 | s | CERAMIC 0.01uF 10% 50V |
| C373 | 1-161-051-00 | s | CERAMIC 0.01uF 10% 50V |
| C374 | 1-161-051-00 | s | CERAMIC 0.01uF 10% 50V |
| C375 | 1-107-046-00 | s | MICA 4.7PF 500V |
| C401 | 1-161-051-00 | s | CERAMIC 0.01uF 10% 50V |
| C402 | 1-161-051-00 | s | CERAMIC 0.01uF 10% 50V |
| C403 | 1-162-722-11 | s | CERAMIC 330PF 1% 50V |
| C404 | 1-162-722-11 | s | CERAMIC 330PF 1% 50V |
| C405 | 1-161-051-00 | s | CERAMIC 0.01uF 10% 50V |
| C406 | 1-162-714-11 | s | CERAMIC 150PF 1% 50V |
| C407 | 1-161-051-00 | s | CERAMIC 0.01uF 10% 50V |
| C408 | 1-162-714-11 | s | CERAMIC 150PF 1% 50V |
| C409 | 1-161-485-00 | s | CERAMIC 0.1uF 50V |
| C410 | 1-124-598-11 | s | ELECT 22uF 20% 25V |
| C411 | 1-124-598-11 | s | ELECT 22uF 20% 25V |
| C412 | 1-161-485-00 | s | CERAMIC 0.1uF 50V |
| C413 | 1-161-485-00 | s | CERAMIC 0.1uF 50V |
| C414 | 1-161-051-00 | s | CERAMIC 0.01uF 10% 50V |
| C415 | 1-161-897-11 | s | CERAMIC 0.33uF 50V |
| C416 | 1-161-051-00 | s | CERAMIC 0.01uF 10% 50V |
| C417 | 1-161-485-00 | s | CERAMIC 0.1uF 50V |
| C418 | 1-161-051-00 | s | CERAMIC 0.01uF 10% 50V |

| Ref. No. or Q'ty | Part No. | SP | Description |
|---|---|---|---|
| C419 | 1-161-051-00 | s | CERAMIC 0.01uF 10% 50V |
| C420 | 1-161-051-00 | s | CERAMIC 0.01uF 10% 50V |
| C421 | 1-107-207-00 | s | MICA 16PF 5% 500V |
| C422 | 1-107-045-00 | s | MICA 3.9PF 500V |
| C423 | 1-161-051-00 | s | CERAMIC 0.01uF 10% 50V |
| C424 | 1-161-897-11 | s | CERAMIC 0.33uF 50V |
| C425 | 1-161-051-00 | s | CERAMIC 0.01uF 10% 50V |
| C426 | 1-107-047-00 | s | MICA 5.6PF 500V |
| C427 | 1-161-051-00 | s | CERAMIC 0.01uF 10% 50V |
| C428 | 1-161-051-00 | s | CERAMIC 0.01uF 10% 50V |
| C429 | 1-161-051-00 | s | CERAMIC 0.01uF 10% 50V |
| C430 | 1-161-051-00 | s | CERAMIC 0.01uF 10% 50V |
| C431 | 1-107-210-00 | s | MICA 22PF 5% 500V |
| C432 | 1-162-728-11 | s | CERAMIC 560PF 1% 50V |
| C433 | 1-161-051-00 | s | CERAMIC 0.01uF 10% 50V |
| C434 | 1-161-051-00 | s | CERAMIC 0.01uF 10% 50V |
| C435 | 1-107-159-00 | s | MICA 33PF 5% 500V |
| C436 | 1-102-074-00 | s | CERAMIC 0.001uF 10% 50V |
| C437 | 1-161-051-00 | s | CERAMIC 0.01uF 10% 50V |
| C438 | 1-161-051-00 | s | CERAMIC 0.01uF 10% 50V |
| C439 | 1-130-481-00 | s | MYLAR 0.0068uF 5% 50V |
| C440 | 1-161-051-00 | s | CERAMIC 0.01uF 10% 50V |
| C441 | 1-161-897-11 | s | CERAMIC 0.33uF 50V |
| C442 | 1-161-897-11 | s | CERAMIC 0.33uF 50V |
| C443 | 1-124-598-11 | s | ELECT 22uF 20% 25V |
| C444 | 1-161-051-00 | s | CERAMIC 0.01uF 10% 50V |
| C445 | 1-161-051-00 | s | CERAMIC 0.01uF 10% 50V |
| C446 | 1-107-046-00 | s | MICA 4.7PF 500V |
| C447 | 1-161-051-00 | s | CERAMIC 0.01uF 10% 50V |
| C448 | 1-161-051-00 | s | CERAMIC 0.01uF 10% 50V |
| C449 | 1-161-051-00 | s | CERAMIC 0.01uF 10% 50V |
| C450 | 1-161-485-00 | s | CERAMIC 0.1uF 50V |
| C451 | 1-161-051-00 | s | CERAMIC 0.01uF 10% 50V |
| C452 | 1-161-051-00 | s | CERAMIC 0.01uF 10% 50V |
| C453 | 1-161-051-00 | s | CERAMIC 0.01uF 10% 50V |
| C454 | 1-107-042-00 | s | MICA 2.2PF 500V |
| C456 | 1-161-051-00 | s | CERAMIC 0.01uF 10% 50V |
| C457 | 1-107-157-00 | s | MICA 27PF 5% 500V |
| C458 | 1-107-206-00 | s | MICA 15PF 5% 500V |
| C459 | 1-161-051-00 | s | CERAMIC 0.01uF 10% 50V |
| C460 | 1-161-051-00 | s | CERAMIC 0.01uF 10% 50V |
| C461 | 1-161-485-00 | s | CERAMIC 0.1uF 50V |
| C462 | 1-102-074-00 | s | CERAMIC 0.001uF 10% 50V |
| C463 | 1-102-074-00 | s | CERAMIC 0.001uF 10% 50V |
| C464 | 1-161-051-00 | s | CERAMIC 0.01uF 10% 50V |
| C465 | 1-161-051-00 | s | CERAMIC 0.01uF 10% 50V |
| C466 | 1-124-598-11 | s | ELECT 22uF 20% 25V |
| C467 | 1-161-051-00 | s | CERAMIC 0.01uF 10% 50V |
| C468 | 1-161-051-00 | s | CERAMIC 0.01uF 10% 50V |
| C469 | 1-161-051-00 | s | CERAMIC 0.01uF 10% 50V |
| C470 | 1-124-598-11 | s | ELECT 22uF 20% 25V |
| C471 | 1-161-051-00 | s | CERAMIC 0.01uF 10% 50V |
| C472 | 1-161-051-00 | s | CERAMIC 0.01uF 10% 50V |
| C473 | 1-161-051-00 | s | CERAMIC 0.01uF 10% 50V |
| C474 | 1-161-051-00 | s | CERAMIC 0.01uF 10% 50V |
| C475 | 1-107-046-00 | s | MICA 4.7PF 500V |
| C522 | 1-124-484-11 | s | ELECT 220 20% 35V |
| C523 | 1-161-055-00 | s | CERAMIC 0.022uF 10% 50V |
| C524 | 1-161-051-00 | s | CERAMIC 0.01uF 10% 50V |

| Ref. No. or Q'ty | Part No. | SP | Description |
|---|---|---|---|
| C526 | 1-161-051-00 | s | CERAMIC 0.01uF 10% 50V |
| C527 | 1-124-598-11 | s | ELECT 22uF 20% 25V |
| CN1 | 1-506-748-11 | s | CONNECTOR, DIN 96P, MALE |
| CN2 | 1-506-748-11 | s | CONNECTOR, DIN 96P, MALE |
| CN101 | 1-561-310-00 | s | CONNECTOR, COAXIAL, MALE |
| CN102 | 1-561-310-00 | s | CONNECTOR, COAXIAL, MALE |
| CN201 | 1-561-310-00 | s | CONNECTOR, COAXIAL, MALE |
| CN202 | 1-561-310-00 | s | CONNECTOR, COAXIAL, MALE |
| CN301 | 1-561-310-00 | s | CONNECTOR, COAXIAL, MALE |
| CN302 | 1-561-310-00 | s | CONNECTOR, COAXIAL, MALE |
| CN401 | 1-561-310-00 | s | CONNECTOR, COAXIAL, MALE |
| CN402 | 1-561-310-00 | s | CONNECTOR, COAXIAL, MALE |
| D1 | 8-719-911-19 | s | DIODE 1SS119 |
| D2 | 8-719-911-19 | s | DIODE 1SS119 |
| D3 | 8-719-800-60 | s | LED TLR214, RED |
| D4 | 8-719-800-60 | s | LED TLR214, RED |
| D5 | 8-719-800-60 | s | LED TLR214, RED |
| D6 | 8-719-800-60 | s | LED TLR214, RED |
| D101 | 8-719-101-98 | s | DIODE 1SS97-0 |
| D102 | 8-719-101-98 | s | DIODE 1SS97-0 |
| D103 | 8-719-101-98 | s | DIODE 1SS97-0 |
| D104 | 8-719-101-98 | s | DIODE 1SS97-0 |
| D105 | 8-719-101-98 | s | DIODE 1SS97-0 |
| D106 | 8-719-911-19 | s | DIODE 1SS119 |
| D107 | 8-719-915-43 | s | DIODE, VARICAP FC54M |
| D201 | 8-719-101-98 | s | DIODE 1SS97-0 |
| D202 | 8-719-101-98 | s | DIODE 1SS97-0 |
| D203 | 8-719-101-98 | s | DIODE 1SS97-0 |
| D204 | 8-719-101-98 | s | DIODE 1SS97-0 |
| D205 | 8-719-101-98 | s | DIODE 1SS97-0 |
| D206 | 8-719-911-19 | s | DIODE 1SS119 |
| D207 | 8-719-915-43 | s | DIODE, VARICAP FC54M |
| D301 | 8-719-101-98 | s | DIODE 1SS97-0 |
| D302 | 8-719-101-98 | s | DIODE 1SS97-0 |
| D303 | 8-719-101-98 | s | DIODE 1SS97-0 |
| D304 | 8-719-101-98 | s | DIODE 1SS97-0 |
| D305 | 8-719-101-98 | s | DIODE 1SS97-0 |
| D306 | 8-719-911-19 | s | DIODE 1SS119 |
| D307 | 8-719-915-43 | s | DIODE, VARICAP FC54M |
| D401 | 8-719-101-98 | s | DIODE 1SS97-0 |
| D402 | 8-719-101-98 | s | DIODE 1SS97-0 |
| D403 | 8-719-101-98 | s | DIODE 1SS97-0 |
| D404 | 8-719-101-98 | s | DIODE 1SS97-0 |
| D405 | 8-719-101-98 | s | DIODE 1SS97-0 |
| D406 | 8-719-911-19 | s | DIODE 1SS119 |
| D407 | 8-719-915-43 | s | DIODE, VARICAP FC54M |
| DL101 | 1-415-624-11 | s | DELAY LINE, 2.0nS |
| DL102 | 1-415-625-11 | s | DELAY LINE, 2.0nS |
| DL103 | 1-415-626-11 | s | DELAY LINE, 2.0nS |
| DL201 | 1-415-624-11 | s | DELAY LINE, 2.0nS |
| DL202 | 1-415-625-11 | s | DELAY LINE, 2.0nS |
| DL203 | 1-415-626-11 | s | DELAY LINE, 2.0nS |
| DL301 | 1-415-624-11 | s | DELAY LINE, 2.0nS |
| DL302 | 1-415-625-11 | s | DELAY LINE, 2.0nS |
| DL303 | 1-415-626-11 | s | DELAY LINE, 2.0nS |
| DL401 | 1-415-624-11 | s | DELAY LINE, 2.0nS |
| DL402 | 1-415-625-11 | s | DELAY LINE, 2.0nS |
| DL403 | 1-415-626-11 | s | DELAY LINE, 2.0nS |

1 (DRC-1 BOARD)

| Ref. No. or Q'ty | Part No. | SP | Description |
|---|---|---|---|
| IC1 | 8-759-002-73 | s | IC MC10H117L |
| IC2 | 8-759-002-73 | s | IC MC10H117L |
| IC3 | 8-759-113-12 | s | IC UPC4084C |
| IC4 | 8-759-007-19 | s | IC MC74HC4051N |
| IC5 | 8-759-916-14 | s | IC SN74HC04N |
| IC6 | 8-759-002-72 | s | IC MC10H116L |
| IC7 | 8-759-002-72 | s | IC MC10H116L |
| IC8 | 8-759-982-07 | s | IC NJM7808FA |
| IC9 | 8-759-701-76 | s | IC NJM7806FA |
| IC10 | 8-759-700-67 | s | IC NJM79L08A |
| IC11 | 8-759-103-19 | s | IC UPC319C |
| IC12 | 8-759-103-19 | s | IC UPC319C |
| IC13 | 8-759-901-23 | s | IC SN74LS123N |
| IC14 | 8-759-000-18 | s | IC MC14002BCP |
| IC15 | 8-759-901-23 | s | IC SN74LS123N |
| IC101 | 8-759-990-82 | s | IC TL082CP |
| IC102 | 8-759-990-82 | s | IC TL082CP |
| IC103 | 8-759-939-71 | s | IC AM6685DL |
| IC104 | 1-808-624-11 | s | IC HD-100A |
| IC105 | 8-759-112-13 | s | IC UPC1663C |
| IC106 | 8-759-002-72 | s | IC MC10H116L |
| IC107 | 8-759-030-96 | s | IC MC12090L |
| IC108 | 8-759-002-68 | s | IC MC10H107L |
| IC109 | 8-759-002-72 | s | IC MC10H116L |
| IC110 | 8-749-900-72 | s | IC MC5400 |
| IC111 | 8-759-930-80 | s | IC CA3080E |
| IC112 | 8-759-990-82 | s | IC TL082CP |
| IC201 | 8-759-990-82 | s | IC TL082CP |
| IC202 | 8-759-990-82 | s | IC TL082CP |
| IC203 | 8-759-939-71 | s | IC AM6685DL |
| IC204 | 1-808-624-11 | s | IC HD-100A |
| IC205 | 8-759-112-13 | s | IC UPC1663C |
| IC206 | 8-759-002-72 | s | IC MC10H116L |
| IC207 | 8-759-030-96 | s | IC MC12090L |
| IC208 | 8-759-002-68 | s | IC MC10H107L |
| IC209 | 8-759-002-72 | s | IC MC10H116L |
| IC210 | 8-749-900-72 | s | IC MC5400 |
| IC211 | 8-759-930-80 | s | IC CA3080E |
| IC212 | 8-759-990-82 | s | IC TL082CP |
| IC301 | 8-759-990-82 | s | IC TL082CP |
| IC302 | 8-759-990-82 | s | IC TL082CP |
| IC303 | 8-759-939-71 | s | IC AM6685DL |
| IC304 | 1-808-624-11 | s | IC HD-100A |
| IC305 | 8-759-112-13 | s | IC UPC1663C |
| IC306 | 8-759-002-72 | s | IC MC10H116L |
| IC307 | 8-759-030-96 | s | IC MC12090L |
| IC308 | 8-759-002-68 | s | IC MC10H107L |
| IC309 | 8-759-002-72 | s | IC MC10H116L |
| IC310 | 8-749-900-72 | s | IC MC5400 |
| IC311 | 8-759-930-80 | s | IC CA3080E |
| IC312 | 8-759-990-82 | s | IC TL082CP |
| IC401 | 8-759-990-82 | s | IC TL082CP |
| IC402 | 8-759-990-82 | s | IC TL082CP |
| IC403 | 8-759-939-71 | s | IC AM6685DL |
| IC404 | 1-808-624-11 | s | IC HD-100A |
| IC405 | 8-759-112-13 | s | IC UPC1663C |
| IC406 | 8-759-002-72 | s | IC MC10H116L |
| IC407 | 8-759-030-96 | s | IC MC12090L |
| IC408 | 8-759-002-68 | s | IC MC10H107L |

(DRC-1 BOARD)

| Ref. No. or Q'ty | Part No. | SP | Description |
|---|---|---|---|
| IC409 | 8-759-002-72 | s | IC MC10H116L |
| IC410 | 8-749-900-72 | s | IC MC5400 |
| IC411 | 8-759-930-80 | s | IC CA3080E |
| IC412 | 8-759-990-82 | s | IC TL082CP |
| L1 | 1-421-370-00 | s | COIL, CHOKE |
| L2 | 1-421-370-00 | s | COIL, CHOKE |
| L3 | 1-421-370-00 | s | COIL, CHOKE |
| L4 | 1-421-370-00 | s | COIL, CHOKE |
| L101 | 1-408-421-00 | s | INDUCTOR 100uH |
| L102 | 1-408-421-00 | s | INDUCTOR 100uH |
| L104 | 1-408-421-00 | s | INDUCTOR 100uH |
| L105 | 1-408-401-00 | s | INDUCTOR 2.2uH |
| L106 | 1-408-413-00 | s | INDUCTOR 22uH |
| L107 | 1-408-401-00 | s | INDUCTOR 2.2uH |
| L201 | 1-408-421-00 | s | INDUCTOR 100uH |
| L202 | 1-408-421-00 | s | INDUCTOR 100uH |
| L204 | 1-408-421-00 | s | INDUCTOR 100uH |
| L205 | 1-408-401-00 | s | INDUCTOR 2.2uH |
| L206 | 1-408-413-00 | s | INDUCTOR 22uH |
| L207 | 1-408-401-00 | s | INDUCTOR 2.2uH |
| L301 | 1-408-421-00 | s | INDUCTOR 100uH |
| L302 | 1-408-421-00 | s | INDUCTOR 100uH |
| L304 | 1-408-421-00 | s | INDUCTOR 100uH |
| L305 | 1-408-401-00 | s | INDUCTOR 2.2uH |
| L306 | 1-408-413-00 | s | INDUCTOR 22uH |
| L307 | 1-408-401-00 | s | INDUCTOR 2.2uH |
| L401 | 1-408-421-00 | s | INDUCTOR 100uH |
| L402 | 1-408-421-00 | s | INDUCTOR 100uH |
| L404 | 1-408-421-00 | s | INDUCTOR 100uH |
| L405 | 1-408-401-00 | s | INDUCTOR 2.2uH |
| L406 | 1-408-413-00 | s | INDUCTOR 22uH |
| L407 | 1-408-401-00 | s | INDUCTOR 2.2uH |
| LV101 | 1-459-928-11 | s | COIL 0.39uH |
| LV102 | 1-459-929-11 | s | COIL 0.68uH |
| LV103 | 1-459-928-11 | s | COIL 0.39uH |
| LV104 | 1-459-927-11 | s | COIL 0.12uH |
| LV201 | 1-459-928-11 | s | COIL 0.39uH |
| LV202 | 1-459-929-11 | s | COIL 0.68uH |
| LV203 | 1-459-928-11 | s | COIL 0.39uH |
| LV204 | 1-459-927-11 | s | COIL 0.12uH |
| LV301 | 1-459-928-11 | s | COIL 0.39uH |
| LV302 | 1-459-929-11 | s | COIL 0.68uH |
| LV303 | 1-459-928-11 | s | COIL 0.39uH |
| LV304 | 1-459-927-11 | s | COIL 0.12uH |
| LV401 | 1-459-928-11 | s | COIL 0.39uH |
| LV402 | 1-459-929-11 | s | COIL 0.68uH |
| LV403 | 1-459-928-11 | s | COIL 0.39uH |
| LV404 | 1-459-927-11 | s | COIL 0.12uH |
| Q1 | 8-729-672-43 | s | TRANSISTOR 2SC2724-D |
| Q2 | 8-729-672-43 | s | TRANSISTOR 2SC2724-D |
| Q3 | 8-729-672-43 | s | TRANSISTOR 2SC2724-D |
| Q4 | 8-729-672-43 | s | TRANSISTOR 2SC2724-D |
| Q5 | 8-729-672-43 | s | TRANSISTOR 2SC2724-D |
| Q6 | 8-729-672-43 | s | TRANSISTOR 2SC2724-D |
| Q7 | 8-729-620-02 | s | TRANSISTOR 2SA1115-EF |
| Q8 | 8-729-672-43 | s | TRANSISTOR 2SC2724-D |
| Q9 | 8-729-900-36 | s | TRANSISTOR DTC124ES |
| Q10 | 8-729-900-36 | s | TRANSISTOR DTC124ES |
| Q11 | 8-729-900-36 | s | TRANSISTOR DTC124ES |

(DRC-1 BOARD)

| Ref. No. or Q'ty | Part No. | SP | Description |
|---|---|---|---|
| Q12 | 8-729-900-36 | s | TRANSISTOR DTC124ES |
| Q13 | 8-729-900-61 | s | TRANSISTOR DTA114ES |
| Q14 | 8-729-620-02 | s | TRANSISTOR 2SA1115-EF |
| Q15 | 8-729-672-43 | s | TRANSISTOR 2SC2724-D |
| Q101 | 8-729-123-69 | s | TRANSISTOR 2SC2369 |
| Q102 | 8-729-123-69 | s | TRANSISTOR 2SC2369 |
| Q103 | 8-729-123-69 | s | TRANSISTOR 2SC2369 |
| Q104 | 8-729-123-69 | s | TRANSISTOR 2SC2369 |
| Q105 | 8-729-123-69 | s | TRANSISTOR 2SC2369 |
| Q106 | 8-729-123-69 | s | TRANSISTOR 2SC2369 |
| Q107 | 8-729-123-69 | s | TRANSISTOR 2SC2369 |
| Q108 | 8-729-123-69 | s | TRANSISTOR 2SC2369 |
| Q109 | 8-729-123-69 | s | TRANSISTOR 2SC2369 |
| Q110 | 8-729-620-02 | s | TRANSISTOR 2SA1115-EF |
| Q201 | 8-729-123-69 | s | TRANSISTOR 2SC2369 |
| Q202 | 8-729-123-69 | s | TRANSISTOR 2SC2369 |
| Q203 | 8-729-123-69 | s | TRANSISTOR 2SC2369 |
| Q204 | 8-729-123-69 | s | TRANSISTOR 2SC2369 |
| Q205 | 8-729-123-69 | s | TRANSISTOR 2SC2369 |
| Q206 | 8-729-123-69 | s | TRANSISTOR 2SC2369 |
| Q207 | 8-729-123-69 | s | TRANSISTOR 2SC2369 |
| Q208 | 8-729-123-69 | s | TRANSISTOR 2SC2369 |
| Q209 | 8-729-123-69 | s | TRANSISTOR 2SC2369 |
| Q210 | 8-729-620-02 | s | TRANSISTOR 2SA1115-EF |
| Q301 | 8-729-123-69 | s | TRANSISTOR 2SC2369 |
| Q302 | 8-729-123-69 | s | TRANSISTOR 2SC2369 |
| Q303 | 8-729-123-69 | s | TRANSISTOR 2SC2369 |
| Q304 | 8-729-123-69 | s | TRANSISTOR 2SC2369 |
| Q305 | 8-729-123-69 | s | TRANSISTOR 2SC2369 |
| Q306 | 8-729-123-69 | s | TRANSISTOR 2SC2369 |
| Q307 | 8-729-123-69 | s | TRANSISTOR 2SC2369 |
| Q308 | 8-729-123-69 | s | TRANSISTOR 2SC2369 |
| Q309 | 8-729-123-69 | s | TRANSISTOR 2SC2369 |
| Q310 | 8-729-620-02 | s | TRANSISTOR 2SA1115-EF |
| Q401 | 8-729-123-69 | s | TRANSISTOR 2SC2369 |
| Q402 | 8-729-123-69 | s | TRANSISTOR 2SC2369 |
| Q403 | 8-729-123-69 | s | TRANSISTOR 2SC2369 |
| Q404 | 8-729-123-69 | s | TRANSISTOR 2SC2369 |
| Q405 | 8-729-123-69 | s | TRANSISTOR 2SC2369 |
| Q406 | 8-729-123-69 | s | TRANSISTOR 2SC2369 |
| Q407 | 8-729-123-69 | s | TRANSISTOR 2SC2369 |
| Q408 | 8-729-123-69 | s | TRANSISTOR 2SC2369 |
| Q409 | 8-729-123-69 | s | TRANSISTOR 2SC2369 |
| Q410 | 8-729-620-02 | s | TRANSISTOR 2SA1115-EF |
| R1 | 1-214-557-00 | s | METAL 1K 1% 1/8W |
| R2 | 1-214-557-00 | s | METAL 1K 1% 1/8W |
| R3 | 1-215-481-00 | s | METAL 330K 1% 1/6W |
| R4 | 1-214-581-00 | s | METAL 10K 1% 1/8W |
| R5 | 1-215-821-11 | s | METAL 43K 1% 1/8W |
| R6 | 1-214-557-00 | s | METAL 1K 1% 1/8W |
| R7 | 1-214-533-00 | s | METAL 100 1% 1/8W |
| R8 | 1-214-565-00 | s | METAL 2.2K 1% 1/8W |
| R9 | 1-214-565-00 | s | METAL 2.2K 1% 1/8W |
| R10 | 1-214-565-00 | s | METAL 2.2K 1% 1/8W |
| R11 | 1-214-565-00 | s | METAL 2.2K 1% 1/8W |
| R12 | 1-214-557-00 | s | METAL 1K 1% 1/8W |
| R13 | 1-214-557-00 | s | METAL 1K 1% 1/8W |
| R14 | 1-214-533-00 | s | METAL 100 1% 1/8W |
| R15 | 1-214-533-00 | s | METAL 100 1% 1/8W |

(DRC-1 BOARD)

| Ref. No. or Q'ty | Part No. | SP | Description |
|---|---|---|---|
| R16 | 1-214-533-00 | s | METAL 100 1% 1/8W |
| R17 | 1-214-533-00 | s | METAL 100 1% 1/8W |
| R18 | 1-214-533-00 | s | METAL 100 1% 1/8W |
| R19 | 1-214-581-00 | s | METAL 10K 1% 1/8W |
| R20 | 1-214-557-00 | s | METAL 1K 1% 1/8W |
| R21 | 1-214-569-00 | s | METAL 3.3K 1% 1/8W |
| R22 | 1-214-569-00 | s | METAL 3.3K 1% 1/8W |
| R23 | 1-214-569-00 | s | METAL 3.3K 1% 1/8W |
| R24 | 1-214-569-00 | s | METAL 3.3K 1% 1/8W |
| R25 | 1-214-565-00 | s | METAL 2.2K 1% 1/8W |
| R26 | 1-214-565-00 | s | METAL 2.2K 1% 1/8W |
| R27 | 1-215-485-00 | s | METAL 470K 1% 1/6W |
| R28 | 1-214-575-00 | s | METAL 5.6K 1% 1/8W |
| R29 | 1-214-557-00 | s | METAL 1K 1% 1/8W |
| R30 | 1-214-585-00 | s | METAL 15K 1% 1/8W |
| R31 | 1-214-557-00 | s | METAL 1K 1% 1/8W |
| R32 | 1-215-485-00 | s | METAL 470K 1% 1/6W |
| R33 | 1-214-575-00 | s | METAL 5.6K 1% 1/8W |
| R34 | 1-214-585-00 | s | METAL 15K 1% 1/8W |
| R35 | 1-215-485-00 | s | METAL 470K 1% 1/6W |
| R36 | 1-214-575-00 | s | METAL 5.6K 1% 1/8W |
| R37 | 1-214-557-00 | s | METAL 1K 1% 1/8W |
| R38 | 1-214-585-00 | s | METAL 15K 1% 1/8W |
| R39 | 1-214-557-00 | s | METAL 1K 1% 1/8W |
| R40 | 1-215-485-00 | s | METAL 470K 1% 1/6W |
| R41 | 1-214-575-00 | s | METAL 5.6K 1% 1/8W |
| R42 | 1-214-585-00 | s | METAL 15K 1% 1/8W |
| R43 | 1-215-469-00 | s | METAL 100K 1% 1/6W |
| R44 | 1-215-469-00 | s | METAL 100K 1% 1/6W |
| R45 | 1-215-469-00 | s | METAL 100K 1% 1/6W |
| R46 | 1-215-469-00 | s | METAL 100K 1% 1/6W |
| R47 | 1-214-557-00 | s | METAL 1K 1% 1/8W |
| R48 | 1-214-557-00 | s | METAL 1K 1% 1/8W |
| R51 | 1-214-557-00 | s | METAL 1K 1% 1/8W |
| R52 | 1-214-557-00 | s | METAL 1K 1% 1/8W |
| R55 | 1-214-549-00 | s | METAL 470 1% 1/8W |
| R56 | 1-214-551-00 | s | METAL 560 1% 1/8W |
| R57 | 1-215-453-00 | s | METAL 22K 1% 1/6W |
| R58 | 1-215-453-00 | s | METAL 22K 1% 1/6W |
| R59 | 1-214-589-00 | s | METAL 22K 1% 1/8W |
| R60 | 1-214-581-00 | s | METAL 10K 1% 1/8W |
| R101 | 1-214-589-00 | s | METAL 22K 1% 1/8W |
| R102 | 1-214-589-00 | s | METAL 22K 1% 1/8W |
| R103 | 1-214-569-00 | s | METAL 3.3K 1% 1/8W |
| R104 | 1-214-569-00 | s | METAL 3.3K 1% 1/8W |
| R105 | 1-214-557-00 | s | METAL 1K 1% 1/8W |
| R106 | 1-214-557-00 | s | METAL 1K 1% 1/8W |
| R107 | 1-215-477-00 | s | METAL 220K 1% 1/6W |
| R108 | 1-215-477-00 | s | METAL 220K 1% 1/6W |
| R109 | 1-215-477-00 | s | METAL 220K 1% 1/6W |
| R110 | 1-215-477-00 | s | METAL 220K 1% 1/6W |
| R111 | 1-214-533-00 | s | METAL 100 1% 1/8W |
| R112 | 1-214-589-00 | s | METAL 22K 1% 1/8W |
| R113 | 1-214-549-00 | s | METAL 470 1% 1/8W |
| R114 | 1-214-533-00 | s | METAL 100 1% 1/8W |
| R115 | 1-214-589-00 | s | METAL 22K 1% 1/8W |
| R116 | 1-214-521-00 | s | METAL 33 1% 1/8W |
| R117 | 1-214-525-00 | s | METAL 47 1% 1/8W |
| R118 | 1-214-549-00 | s | METAL 470 1% 1/8W |

(DRC-1 BOARD)

| Ref. No. or Q'ty | Part No. | SP | Description |
|---|---|---|---|
| R119 | 1-214-533-00 | s | METAL 100 1% 1/8W |
| R120 | 1-214-533-00 | s | METAL 100 1% 1/8W |
| R121 | 1-214-549-00 | s | METAL 470 1% 1/8W |
| R122 | 1-214-521-00 | s | METAL 33 1% 1/8W |
| R123 | 1-214-521-00 | s | METAL 33 1% 1/8W |
| R124 | 1-214-547-00 | s | METAL 390 1% 1/8W |
| R125 | 1-214-521-00 | s | METAL 33 1% 1/8W |
| R126 | 1-214-565-00 | s | METAL 2.2K 1% 1/8W |
| R127 | 1-214-561-00 | s | METAL 1.5k 1% 1/8W |
| R128 | 1-214-557-00 | s | METAL 1K 1% 1/8W |
| R129 | 1-214-521-00 | s | METAL 33 1% 1/8W |
| R130 | 1-214-589-00 | s | METAL 22K 1% 1/8W |
| R131 | 1-214-521-00 | s | METAL 33 1% 1/8W |
| R132 | 1-214-525-00 | s | METAL 47 1% 1/8W |
| R133 | 1-214-521-00 | s | METAL 33 1% 1/8W |
| R134 | 1-214-557-00 | s | METAL 1K 1% 1/8W |
| R135 | 1-214-509-00 | s | METAL 10 1% 1/8W |
| R136 | 1-214-589-00 | s | METAL 22K 1% 1/8W |
| R137 | 1-214-557-00 | s | METAL 1K 1% 1/8W |
| R138 | 1-214-521-00 | s | METAL 33 1% 1/8W |
| R139 | 1-214-549-00 | s | METAL 470 1% 1/8W |
| R140 | 1-214-521-00 | s | METAL 33 1% 1/8W |
| R141 | 1-214-561-00 | s | METAL 1.5k 1% 1/8W |
| R142 | 1-214-533-00 | s | METAL 100 1% 1/8W |
| R143 | 1-214-561-00 | s | METAL 1.5k 1% 1/8W |
| R144 | 1-214-561-00 | s | METAL 1.5k 1% 1/8W |
| R145 | 1-214-521-00 | s | METAL 33 1% 1/8W |
| R146 | 1-214-521-00 | s | METAL 33 1% 1/8W |
| R147 | 1-214-533-00 | s | METAL 100 1% 1/8W |
| R148 | 1-214-533-00 | s | METAL 100 1% 1/8W |
| R149 | 1-214-553-00 | s | METAL 680 1% 1/8W |
| R150 | 1-214-521-00 | s | METAL 33 1% 1/8W |
| R151 | 1-214-551-00 | s | METAL 560 1% 1/8W |
| R152 | 1-214-551-00 | s | METAL 560 1% 1/8W |
| R153 | 1-214-521-00 | s | METAL 33 1% 1/8W |
| R154 | 1-214-533-00 | s | METAL 100 1% 1/8W |
| R155 | 1-214-533-00 | s | METAL 100 1% 1/8W |
| R156 | 1-214-555-00 | s | METAL 820 1% 1/8W |
| R157 | 1-214-557-00 | s | METAL 1K 1% 1/8W |
| R158 | 1-214-557-00 | s | METAL 1K 1% 1/8W |
| R159 | 1-214-555-00 | s | METAL 820 1% 1/8W |
| R160 | 1-214-529-00 | s | METAL 68 1% 1/8W |
| R161 | 1-214-569-00 | s | METAL 3.3K 1% 1/8W |
| R162 | 1-214-569-00 | s | METAL 3.3K 1% 1/8W |
| R163 | 1-214-533-00 | s | METAL 100 1% 1/8W |
| R164 | 1-214-557-00 | s | METAL 1K 1% 1/8W |
| R165 | 1-214-557-00 | s | METAL 1K 1% 1/8W |
| R166 | 1-214-533-00 | s | METAL 100 1% 1/8W |
| R167 | 1-214-523-00 | s | METAL 39 1% 1/8W |
| R168 | 1-214-523-00 | s | METAL 39 1% 1/8W |
| R169 | 1-214-549-00 | s | METAL 470 1% 1/8W |
| R170 | 1-214-530-00 | s | METAL 75 1% 1/8W |
| R171 | 1-214-537-00 | s | METAL 150 1% 1/8W |
| R172 | 1-214-549-00 | s | METAL 470 1% 1/8W |
| R174 | 1-214-581-00 | s | METAL 10K 1% 1/8W |
| R175 | 1-214-581-00 | s | METAL 10K 1% 1/8W |
| R176 | 1-214-537-00 | s | METAL 150 1% 1/8W |
| R177 | 1-214-557-00 | s | METAL 1K 1% 1/8W |
| R178 | 1-214-557-00 | s | METAL 1K 1% 1/8W |

(DRC-1 BOARD)

| Ref. No. or Q'ty | Part No. | SP | Description |
|---|---|---|---|
| R179 | 1-215-409-00 | s | METAL 330 1% 1/6W |
| R180 | 1-214-581-00 | s | METAL 10K 1% 1/8W |
| R181 | 1-214-569-00 | s | METAL 3.3K 1% 1/8W |
| R182 | 1-214-569-00 | s | METAL 3.3K 1% 1/8W |
| R183 | 1-215-481-00 | s | METAL 330K 1% 1/6W |
| R184 | 1-214-561-00 | s | METAL 1.5k 1% 1/8W |
| R185 | 1-214-557-00 | s | METAL 1K 1% 1/8W |
| R186 | 1-214-581-00 | s | METAL 10K 1% 1/8W |
| R187 | 1-214-583-00 | s | METAL 12K 1% 1/8W |
| R188 | 1-215-469-00 | s | METAL 100K 1% 1/6W |
| R189 | 1-214-593-00 | s | METAL 33K 1% 1/8W |
| R190 | 1-214-529-00 | s | METAL 68 1% 1/8W |
| R191 | 1-214-529-00 | s | METAL 68 1% 1/8W |
| R192 | 1-214-529-00 | s | METAL 68 1% 1/8W |
| R193 | 1-214-529-00 | s | METAL 68 1% 1/8W |
| R194 | 1-215-472-00 | s | METAL 130K 1% 1/6W |
| R195 | 1-215-481-00 | s | METAL 330K 1% 1/6W |
| R196 | 1-214-549-00 | s | METAL 470 1% 1/8W |
| R197 | 1-214-555-00 | s | METAL 820 1% 1/8W |
| R198 | 1-214-575-00 | s | METAL 5.6K 1% 1/8W |
| R201 | 1-214-589-00 | s | METAL 22K 1% 1/8W |
| R202 | 1-214-589-00 | s | METAL 22K 1% 1/8W |
| R203 | 1-214-569-00 | s | METAL 3.3K 1% 1/8W |
| R204 | 1-214-569-00 | s | METAL 3.3K 1% 1/8W |
| R205 | 1-214-557-00 | s | METAL 1K 1% 1/8W |
| R206 | 1-214-557-00 | s | METAL 1K 1% 1/8W |
| R207 | 1-215-477-00 | s | METAL 220K 1% 1/6W |
| R208 | 1-215-477-00 | s | METAL 220K 1% 1/6W |
| R209 | 1-215-477-00 | s | METAL 220K 1% 1/6W |
| R210 | 1-215-477-00 | s | METAL 220K 1% 1/6W |
| R211 | 1-214-533-00 | s | METAL 100 1% 1/8W |
| R212 | 1-214-589-00 | s | METAL 22K 1% 1/8W |
| R213 | 1-214-549-00 | s | METAL 470 1% 1/8W |
| R214 | 1-214-533-00 | s | METAL 100 1% 1/8W |
| R215 | 1-214-589-00 | s | METAL 22K 1% 1/8W |
| R216 | 1-214-521-00 | s | METAL 33 1% 1/8W |
| R217 | 1-214-525-00 | s | METAL 47 1% 1/8W |
| R218 | 1-214-549-00 | s | METAL 470 1% 1/8W |
| R219 | 1-214-533-00 | s | METAL 100 1% 1/8W |
| R220 | 1-214-533-00 | s | METAL 100 1% 1/8W |
| R221 | 1-214-549-00 | s | METAL 470 1% 1/8W |
| R222 | 1-214-521-00 | s | METAL 33 1% 1/8W |
| R223 | 1-214-521-00 | s | METAL 33 1% 1/8W |
| R224 | 1-214-547-00 | s | METAL 390 1% 1/8W |
| R225 | 1-214-521-00 | s | METAL 33 1% 1/8W |
| R226 | 1-214-565-00 | s | METAL 2.2K 1% 1/8W |
| R227 | 1-214-561-00 | s | METAL 1.5k 1% 1/8W |
| R228 | 1-214-557-00 | s | METAL 1K 1% 1/8W |
| R229 | 1-214-521-00 | s | METAL 33 1% 1/8W |
| R230 | 1-214-589-00 | s | METAL 22K 1% 1/8W |
| R231 | 1-214-521-00 | s | METAL 33 1% 1/8W |
| R232 | 1-214-525-00 | s | METAL 47 1% 1/8W |
| R233 | 1-214-521-00 | s | METAL 33 1% 1/8W |
| R234 | 1-214-557-00 | s | METAL 1K 1% 1/8W |
| R235 | 1-214-509-00 | s | METAL 10 1% 1/8W |
| R236 | 1-214-589-00 | s | METAL 22K 1% 1/8W |
| R237 | 1-214-557-00 | s | METAL 1K 1% 1/8W |
| R238 | 1-214-521-00 | s | METAL 33 1% 1/8W |
| R239 | 1-214-549-00 | s | METAL 470 1% 1/8W |

(DRC-1 BOARD)

| Ref. No. or Q'ty | Part No. | SP | Description |
|---|---|---|---|
| R240 | 1-214-521-00 | s | METAL 33 1% 1/8W |
| R241 | 1-214-561-00 | s | METAL 1.5k 1% 1/8W |
| R242 | 1-214-533-00 | s | METAL 100 1% 1/8W |
| R243 | 1-214-561-00 | s | METAL 1.5k 1% 1/8W |
| R244 | 1-214-561-00 | s | METAL 1.5k 1% 1/8W |
| R245 | 1-214-521-00 | s | METAL 33 1% 1/8W |
| R246 | 1-214-521-00 | s | METAL 33 1% 1/8W |
| R247 | 1-214-533-00 | s | METAL 100 1% 1/8W |
| R248 | 1-214-533-00 | s | METAL 100 1% 1/8W |
| R249 | 1-214-553-00 | s | METAL 680 1% 1/8W |
| R250 | 1-214-521-00 | s | METAL 33 1% 1/8W |
| R251 | 1-214-551-00 | s | METAL 560 1% 1/8W |
| R252 | 1-214-551-00 | s | METAL 560 1% 1/8W |
| R253 | 1-214-521-00 | s | METAL 33 1% 1/8W |
| R254 | 1-214-533-00 | s | METAL 100 1% 1/8W |
| R255 | 1-214-533-00 | s | METAL 100 1% 1/8W |
| R256 | 1-214-555-00 | s | METAL 820 1% 1/8W |
| R257 | 1-214-557-00 | s | METAL 1K 1% 1/8W |
| R258 | 1-214-557-00 | s | METAL 1K 1% 1/8W |
| R259 | 1-214-555-00 | s | METAL 820 1% 1/8W |
| R260 | 1-214-529-00 | s | METAL 68 1% 1/8W |
| R261 | 1-214-569-00 | s | METAL 3.3K 1% 1/8W |
| R262 | 1-214-569-00 | s | METAL 3.3K 1% 1/8W |
| R263 | 1-214-533-00 | s | METAL 100 1% 1/8W |
| R264 | 1-214-557-00 | s | METAL 1K 1% 1/8W |
| R265 | 1-214-557-00 | s | METAL 1K 1% 1/8W |
| R266 | 1-214-533-00 | s | METAL 100 1% 1/8W |
| R267 | 1-214-523-00 | s | METAL 39 1% 1/8W |
| R268 | 1-214-523-00 | s | METAL 39 1% 1/8W |
| R269 | 1-214-549-00 | s | METAL 470 1% 1/8W |
| R270 | 1-214-530-00 | s | METAL 75 1% 1/8W |
| R271 | 1-214-537-00 | s | METAL 150 1% 1/8W |
| R272 | 1-214-549-00 | s | METAL 470 1% 1/8W |
| R274 | 1-214-581-00 | s | METAL 10K 1% 1/8W |
| R275 | 1-214-581-00 | s | METAL 10K 1% 1/8W |
| R276 | 1-214-537-00 | s | METAL 150 1% 1/8W |
| R277 | 1-214-557-00 | s | METAL 1K 1% 1/8W |
| R278 | 1-214-557-00 | s | METAL 1K 1% 1/8W |
| R279 | 1-215-409-00 | s | METAL 330 1% 1/6W |
| R280 | 1-214-581-00 | s | METAL 10K 1% 1/8W |
| R281 | 1-214-569-00 | s | METAL 3.3K 1% 1/8W |
| R282 | 1-214-569-00 | s | METAL 3.3K 1% 1/8W |
| R283 | 1-215-481-00 | s | METAL 330K 1% 1/6W |
| R284 | 1-214-561-00 | s | METAL 1.5k 1% 1/8W |
| R285 | 1-214-557-00 | s | METAL 1K 1% 1/8W |
| R286 | 1-214-581-00 | s | METAL 10K 1% 1/8W |
| R287 | 1-214-583-00 | s | METAL 12K 1% 1/8W |
| R288 | 1-215-469-00 | s | METAL 100K 1% 1/6W |
| R289 | 1-214-593-00 | s | METAL 33K 1% 1/8W |
| R290 | 1-214-529-00 | s | METAL 68 1% 1/8W |
| R291 | 1-214-529-00 | s | METAL 68 1% 1/8W |
| R292 | 1-214-529-00 | s | METAL 68 1% 1/8W |
| R293 | 1-214-529-00 | s | METAL 68 1% 1/8W |
| R294 | 1-215-472-00 | s | METAL 130K 1% 1/6W |
| R295 | 1-215-481-00 | s | METAL 330K 1% 1/6W |
| R296 | 1-214-549-00 | s | METAL 470 1% 1/8W |
| R297 | 1-214-555-00 | s | METAL 820 1% 1/8W |
| R298 | 1-214-575-00 | s | METAL 5.6K 1% 1/8W |
| R301 | 1-214-589-00 | s | METAL 22K 1% 1/8W |

(DRC-1 BOARD)

| Ref. No. or Q'ty | Part No. | SP | Description |
|---|---|---|---|
| R302 | 1-214-589-00 | s | METAL 22K 1% 1/8W |
| R303 | 1-214-569-00 | s | METAL 3.3K 1% 1/8W |
| R304 | 1-214-569-00 | s | METAL 3.3K 1% 1/8W |
| R305 | 1-214-557-00 | s | METAL 1K 1% 1/8W |
| R306 | 1-214-557-00 | s | METAL 1K 1% 1/8W |
| R307 | 1-215-477-00 | s | METAL 220K 1% 1/6W |
| R308 | 1-215-477-00 | s | METAL 220K 1% 1/6W |
| R309 | 1-215-477-00 | s | METAL 220K 1% 1/6W |
| R310 | 1-215-477-00 | s | METAL 220K 1% 1/6W |
| R311 | 1-214-533-00 | s | METAL 100 1% 1/8W |
| R312 | 1-214-589-00 | s | METAL 22K 1% 1/8W |
| R313 | 1-214-549-00 | s | METAL 470 1% 1/8W |
| R314 | 1-214-533-00 | s | METAL 100 1% 1/8W |
| R315 | 1-214-589-00 | s | METAL 22K 1% 1/8W |
| R316 | 1-214-521-00 | s | METAL 33 1% 1/8W |
| R317 | 1-214-525-00 | s | METAL 47 1% 1/8W |
| R318 | 1-214-549-00 | s | METAL 470 1% 1/8W |
| R319 | 1-214-533-00 | s | METAL 100 1% 1/8W |
| R320 | 1-214-533-00 | s | METAL 100 1% 1/8W |
| R321 | 1-214-549-00 | s | METAL 470 1% 1/8W |
| R322 | 1-214-521-00 | s | METAL 33 1% 1/8W |
| R323 | 1-214-521-00 | s | METAL 33 1% 1/8W |
| R324 | 1-214-547-00 | s | METAL 390 1% 1/8W |
| R325 | 1-214-521-00 | s | METAL 33 1% 1/8W |
| R326 | 1-214-565-00 | s | METAL 2.2K 1% 1/8W |
| R327 | 1-214-561-00 | s | METAL 1.5k 1% 1/8W |
| R328 | 1-214-557-00 | s | METAL 1K 1% 1/8W |
| R329 | 1-214-521-00 | s | METAL 33 1% 1/8W |
| R330 | 1-214-589-00 | s | METAL 22K 1% 1/8W |
| R331 | 1-214-521-00 | s | METAL 33 1% 1/8W |
| R332 | 1-214-525-00 | s | METAL 47 1% 1/8W |
| R333 | 1-214-521-00 | s | METAL 33 1% 1/8W |
| R334 | 1-214-557-00 | s | METAL 1K 1% 1/8W |
| R335 | 1-214-509-00 | s | METAL 10 1% 1/8W |
| R336 | 1-214-589-00 | s | METAL 22K 1% 1/8W |
| R337 | 1-214-557-00 | s | METAL 1K 1% 1/8W |
| R338 | 1-214-521-00 | s | METAL 33 1% 1/8W |
| R339 | 1-214-549-00 | s | METAL 470 1% 1/8W |
| R340 | 1-214-521-00 | s | METAL 33 1% 1/8W |
| R341 | 1-214-561-00 | s | METAL 1.5k 1% 1/8W |
| R342 | 1-214-533-00 | s | METAL 100 1% 1/8W |
| R343 | 1-214-561-00 | s | METAL 1.5k 1% 1/8W |
| R344 | 1-214-561-00 | s | METAL 1.5k 1% 1/8W |
| R345 | 1-214-521-00 | s | METAL 33 1% 1/8W |
| R346 | 1-214-521-00 | s | METAL 33 1% 1/8W |
| R347 | 1-214-533-00 | s | METAL 100 1% 1/8W |
| R348 | 1-214-533-00 | s | METAL 100 1% 1/8W |
| R349 | 1-214-553-00 | s | METAL 680 1% 1/8W |
| R350 | 1-214-521-00 | s | METAL 33 1% 1/8W |
| R351 | 1-214-551-00 | s | METAL 560 1% 1/8W |
| R352 | 1-214-551-00 | s | METAL 560 1% 1/8W |
| R353 | 1-214-521-00 | s | METAL 33 1% 1/8W |
| R354 | 1-214-533-00 | s | METAL 100 1% 1/8W |
| R355 | 1-214-533-00 | s | METAL 100 1% 1/8W |
| R356 | 1-214-555-00 | s | METAL 820 1% 1/8W |
| R357 | 1-214-557-00 | s | METAL 1K 1% 1/8W |
| R358 | 1-214-557-00 | s | METAL 1K 1% 1/8W |
| R359 | 1-214-555-00 | s | METAL 820 1% 1/8W |
| R360 | 1-214-529-00 | s | METAL 68 1% 1/8W |

(DRC-1 BOARD)

| Ref. No. or Q'ty | Part No. | SP | Description |
|---|---|---|---|
| R361 | 1-214-569-00 | s | METAL 3.3K 1% 1/8W |
| R362 | 1-214-569-00 | s | METAL 3.3K 1% 1/8W |
| R363 | 1-214-533-00 | s | METAL 100 1% 1/8W |
| R364 | 1-214-557-00 | s | METAL 1K 1% 1/8W |
| R365 | 1-214-557-00 | s | METAL 1K 1% 1/8W |
| R366 | 1-214-533-00 | s | METAL 100 1% 1/8W |
| R367 | 1-214-523-00 | s | METAL 39 1% 1/8W |
| R368 | 1-214-523-00 | s | METAL 39 1% 1/8W |
| R369 | 1-214-549-00 | s | METAL 470 1% 1/8W |
| R370 | 1-214-530-00 | s | METAL 75 1% 1/8W |
| R371 | 1-214-537-00 | s | METAL 150 1% 1/8W |
| R372 | 1-214-549-00 | s | METAL 470 1% 1/8W |
| R374 | 1-214-581-00 | s | METAL 10K 1% 1/8W |
| R375 | 1-214-581-00 | s | METAL 10K 1% 1/8W |
| R376 | 1-214-537-00 | s | METAL 150 1% 1/8W |
| R377 | 1-214-557-00 | s | METAL 1K 1% 1/8W |
| R378 | 1-214-557-00 | s | METAL 1K 1% 1/8W |
| R379 | 1-215-409-00 | s | METAL 330 1% 1/6W |
| R380 | 1-214-581-00 | s | METAL 10K 1% 1/8W |
| R381 | 1-214-569-00 | s | METAL 3.3K 1% 1/8W |
| R382 | 1-214-569-00 | s | METAL 3.3K 1% 1/8W |
| R383 | 1-215-481-00 | s | METAL 330K 1% 1/6W |
| R384 | 1-214-561-00 | s | METAL 1.5k 1% 1/8W |
| R385 | 1-214-557-00 | s | METAL 1K 1% 1/8W |
| R386 | 1-214-581-00 | s | METAL 10K 1% 1/8W |
| R387 | 1-214-583-00 | s | METAL 12K 1% 1/8W |
| R388 | 1-215-469-00 | s | METAL 100K 1% 1/6W |
| R389 | 1-214-593-00 | s | METAL 33K 1% 1/8W |
| R390 | 1-214-529-00 | s | METAL 68 1% 1/8W |
| R391 | 1-214-529-00 | s | METAL 68 1% 1/8W |
| R392 | 1-214-529-00 | s | METAL 68 1% 1/8W |
| R393 | 1-214-529-00 | s | METAL 68 1% 1/8W |
| R394 | 1-215-472-00 | s | METAL 130K 1% 1/6W |
| R395 | 1-215-481-00 | s | METAL 330K 1% 1/6W |
| R396 | 1-214-549-00 | s | METAL 470 1% 1/8W |
| R397 | 1-214-555-00 | s | METAL 820 1% 1/8W |
| R398 | 1-214-575-00 | s | METAL 5.6K 1% 1/8W |
| R401 | 1-214-589-00 | s | METAL 22K 1% 1/8W |
| R402 | 1-214-589-00 | s | METAL 22K 1% 1/8W |
| R403 | 1-214-569-00 | s | METAL 3.3K 1% 1/8W |
| R404 | 1-214-569-00 | s | METAL 3.3K 1% 1/8W |
| R405 | 1-214-557-00 | s | METAL 1K 1% 1/8W |
| R406 | 1-214-557-00 | s | METAL 1K 1% 1/8W |
| R407 | 1-215-477-00 | s | METAL 220K 1% 1/6W |
| R408 | 1-215-477-00 | s | METAL 220K 1% 1/6W |
| R409 | 1-215-477-00 | s | METAL 220K 1% 1/6W |
| R410 | 1-215-477-00 | s | METAL 220K 1% 1/6W |
| R411 | 1-214-533-00 | s | METAL 100 1% 1/8W |
| R412 | 1-214-589-00 | s | METAL 22K 1% 1/8W |
| R413 | 1-214-549-00 | s | METAL 470 1% 1/8W |
| R414 | 1-214-533-00 | s | METAL 100 1% 1/8W |
| R415 | 1-214-589-00 | s | METAL 22K 1% 1/8W |
| R416 | 1-214-521-00 | s | METAL 33 1% 1/8W |
| R417 | 1-214-525-00 | s | METAL 47 1% 1/8W |
| R418 | 1-214-549-00 | s | METAL 470 1% 1/8W |
| R419 | 1-214-533-00 | s | METAL 100 1% 1/8W |
| R420 | 1-214-533-00 | s | METAL 100 1% 1/8W |
| R421 | 1-214-549-00 | s | METAL 470 1% 1/8W |
| R422 | 1-214-521-00 | s | METAL 33 1% 1/8W |

(DRC-1 BOARD)

| Ref. No. or Q'ty | Part No. | SP | Description |
|---|---|---|---|
| R423 | 1-214-521-00 | s | METAL 33 1% 1/8W |
| R424 | 1-214-547-00 | s | METAL 390 1% 1/8W |
| R425 | 1-214-521-00 | s | METAL 33 1% 1/8W |
| R426 | 1-214-565-00 | s | METAL 2.2K 1% 1/8W |
| R427 | 1-214-561-00 | s | METAL 1.5k 1% 1/8W |
| R428 | 1-214-557-00 | s | METAL 1K 1% 1/8W |
| R429 | 1-214-521-00 | s | METAL 33 1% 1/8W |
| R430 | 1-214-589-00 | s | METAL 22K 1% 1/8W |
| R431 | 1-214-521-00 | s | METAL 33 1% 1/8W |
| R432 | 1-214-525-00 | s | METAL 47 1% 1/8W |
| R433 | 1-214-521-00 | s | METAL 33 1% 1/8W |
| R434 | 1-214-557-00 | s | METAL 1K 1% 1/8W |
| R435 | 1-214-509-00 | s | METAL 10 1% 1/8W |
| R436 | 1-214-589-00 | s | METAL 22K 1% 1/8W |
| R437 | 1-214-557-00 | s | METAL 1K 1% 1/8W |
| R438 | 1-214-521-00 | s | METAL 33 1% 1/8W |
| R439 | 1-214-549-00 | s | METAL 470 1% 1/8W |
| R440 | 1-214-521-00 | s | METAL 33 1% 1/8W |
| R441 | 1-214-561-00 | s | METAL 1.5k 1% 1/8W |
| R442 | 1-214-533-00 | s | METAL 100 1% 1/8W |
| R443 | 1-214-561-00 | s | METAL 1.5k 1% 1/8W |
| R444 | 1-214-561-00 | s | METAL 1.5k 1% 1/8W |
| R445 | 1-214-521-00 | s | METAL 33 1% 1/8W |
| R446 | 1-214-521-00 | s | METAL 33 1% 1/8W |
| R447 | 1-214-533-00 | s | METAL 100 1% 1/8W |
| R448 | 1-214-533-00 | s | METAL 100 1% 1/8W |
| R449 | 1-214-553-00 | s | METAL 680 1% 1/8W |
| R450 | 1-214-521-00 | s | METAL 33 1% 1/8W |
| R451 | 1-214-551-00 | s | METAL 560 1% 1/8W |
| R452 | 1-214-551-00 | s | METAL 560 1% 1/8W |
| R453 | 1-214-521-00 | s | METAL 33 1% 1/8W |
| R454 | 1-214-533-00 | s | METAL 100 1% 1/8W |
| R455 | 1-214-533-00 | s | METAL 100 1% 1/8W |
| R456 | 1-214-555-00 | s | METAL 820 1% 1/8W |
| R457 | 1-214-557-00 | s | METAL 1K 1% 1/8W |
| R458 | 1-214-557-00 | s | METAL 1K 1% 1/8W |
| R459 | 1-214-555-00 | s | METAL 820 1% 1/8W |
| R460 | 1-214-529-00 | s | METAL 68 1% 1/8W |
| R461 | 1-214-569-00 | s | METAL 3.3K 1% 1/8W |
| R462 | 1-214-569-00 | s | METAL 3.3K 1% 1/8W |
| R463 | 1-214-533-00 | s | METAL 100 1% 1/8W |
| R464 | 1-214-557-00 | s | METAL 1K 1% 1/8W |
| R465 | 1-214-557-00 | s | METAL 1K 1% 1/8W |
| R466 | 1-214-533-00 | s | METAL 100 1% 1/8W |
| R467 | 1-214-523-00 | s | METAL 39 1% 1/8W |
| R468 | 1-214-523-00 | s | METAL 39 1% 1/8W |
| R469 | 1-214-549-00 | s | METAL 470 1% 1/8W |
| R470 | 1-214-530-00 | s | METAL 75 1% 1/8W |
| R471 | 1-214-537-00 | s | METAL 150 1% 1/8W |
| R472 | 1-214-549-00 | s | METAL 470 1% 1/8W |
| R474 | 1-214-581-00 | s | METAL 10K 1% 1/8W |
| R475 | 1-214-581-00 | s | METAL 10K 1% 1/8W |
| R476 | 1-214-537-00 | s | METAL 150 1% 1/8W |
| R477 | 1-214-557-00 | s | METAL 1K 1% 1/8W |
| R478 | 1-214-557-00 | s | METAL 1K 1% 1/8W |
| R479 | 1-215-409-00 | s | METAL 330 1% 1/6W |
| R480 | 1-214-581-00 | s | METAL 10K 1% 1/8W |
| R481 | 1-214-569-00 | s | METAL 3.3K 1% 1/8W |
| R482 | 1-214-569-00 | s | METAL 3.3K 1% 1/8W |

(DRC-1 BOARD)

| Ref. No. or Q'ty | Part No. | SP | Description |
|---|---|---|---|
| R483 | 1-215-481-00 | s | METAL 330K 1% 1/6W |
| R484 | 1-214-561-00 | s | METAL 1.5k 1% 1/8W |
| R485 | 1-214-557-00 | s | METAL 1K 1% 1/8W |
| R486 | 1-214-581-00 | s | METAL 10K 1% 1/8W |
| R487 | 1-214-583-00 | s | METAL 12K 1% 1/8W |
| R488 | 1-215-469-00 | s | METAL 100K 1% 1/6W |
| R489 | 1-214-593-00 | s | METAL 33K 1% 1/8W |
| R490 | 1-214-529-00 | s | METAL 68 1% 1/8W |
| R491 | 1-214-529-00 | s | METAL 68 1% 1/8W |
| R492 | 1-214-529-00 | s | METAL 68 1% 1/8W |
| R493 | 1-214-529-00 | s | METAL 68 1% 1/8W |
| R494 | 1-215-472-00 | s | METAL 130K 1% 1/6W |
| R495 | 1-215-481-00 | s | METAL 330K 1% 1/6W |
| R496 | 1-214-549-00 | s | METAL 470 1% 1/8W |
| R497 | 1-214-555-00 | s | METAL 820 1% 1/8W |
| R498 | 1-214-575-00 | s | METAL 5.6K 1% 1/8W |
| R511 | 1-215-463-00 | s | METAL 56K 1% 1/6W |
| R512 | 1-215-463-00 | s | METAL 56K 1% 1/6W |
| R513 | 1-215-409-00 | s | METAL 330 1% 1/6W |
| R521 | 1-215-463-00 | s | METAL 56K 1% 1/6W |
| R522 | 1-215-463-00 | s | METAL 56K 1% 1/6W |
| R523 | 1-215-409-00 | s | METAL 330 1% 1/6W |
| R531 | 1-215-463-00 | s | METAL 56K 1% 1/6W |
| R532 | 1-215-463-00 | s | METAL 56K 1% 1/6W |
| R533 | 1-215-409-00 | s | METAL 330 1% 1/6W |
| R541 | 1-215-463-00 | s | METAL 56K 1% 1/6W |
| R542 | 1-215-463-00 | s | METAL 56K 1% 1/6W |
| R543 | 1-215-409-00 | s | METAL 330 1% 1/6W |
| RB1 | 1-231-485-11 | s | RESISTOR BLOCK 100x4 |
| RB2 | 1-231-489-11 | s | RESISTOR BLOCK 150X4 |
| RB3 | 1-231-485-11 | s | RESISTOR BLOCK 100x4 |
| RB4 | 1-231-489-11 | s | RESISTOR BLOCK 150X4 |
| RB5 | 1-231-485-11 | s | RESISTOR BLOCK 100x4 |
| RB6 | 1-231-489-11 | s | RESISTOR BLOCK 150X4 |
| RB7 | 1-231-485-11 | s | RESISTOR BLOCK 100x4 |
| RB8 | 1-231-489-11 | s | RESISTOR BLOCK 150X4 |
| RB9 | 1-231-525-00 | s | RESISTOR BLOCK 4.7Kx4 |
| RB10 | 1-231-525-00 | s | RESISTOR BLOCK 4.7Kx4 |
| RB11 | 1-231-525-00 | s | RESISTOR BLOCK 4.7Kx4 |
| RB12 | 1-236-321-11 | s | RESISTOR BLOCK 68X4 |
| RB13 | 1-236-321-11 | s | RESISTOR BLOCK 68X4 |
| RB14 | 1-231-525-00 | s | RESISTOR BLOCK 4.7Kx4 |
| RB15 | 1-231-513-00 | s | RESISTOR BLOCK 1.5KX4 |
| RB16 | 1-231-501-00 | s | RESISTOR BLOCK 470x4 |
| RB101 | 1-231-485-11 | s | RESISTOR BLOCK 100x4 |
| RB102 | 1-231-489-11 | s | RESISTOR BLOCK 150X4 |
| RB103 | 1-231-485-11 | s | RESISTOR BLOCK 100x4 |
| RB104 | 1-231-489-11 | s | RESISTOR BLOCK 150X4 |
| RB105 | 1-236-326-11 | s | RESISTOR BLOCK 100X2 |
| RB106 | 1-236-327-11 | s | RESISTOR BLOCK 150X2 |
| RB107 | 1-231-501-00 | s | RESISTOR BLOCK 470x4 |
| RB108 | 1-236-326-11 | s | RESISTOR BLOCK 100X2 |
| RB109 | 1-236-327-11 | s | RESISTOR BLOCK 150X2 |
| RB201 | 1-231-485-11 | s | RESISTOR BLOCK 100x4 |
| RB202 | 1-231-489-11 | s | RESISTOR BLOCK 150X4 |
| RB203 | 1-231-485-11 | s | RESISTOR BLOCK 100x4 |
| RB204 | 1-231-489-11 | s | RESISTOR BLOCK 150X4 |
| RB205 | 1-236-326-11 | s | RESISTOR BLOCK 100X2 |
| RB206 | 1-236-327-11 | s | RESISTOR BLOCK 150X2 |

(DRC-1 BOARD)

| Ref. No. or Q'ty | Part No. | SP | Description |
|---|---|---|---|
| RB207 | 1-231-501-00 | s | RESISTOR BLOCK 470x4 |
| RB208 | 1-236-326-11 | s | RESISTOR BLOCK 100X2 |
| RB209 | 1-236-327-11 | s | RESISTOR BLOCK 150X2 |
| RB301 | 1-231-485-11 | s | RESISTOR BLOCK 100x4 |
| RB302 | 1-231-489-11 | s | RESISTOR BLOCK 150X4 |
| RB303 | 1-231-485-11 | s | RESISTOR BLOCK 100x4 |
| RB304 | 1-231-489-11 | s | RESISTOR BLOCK 150X4 |
| RB305 | 1-236-326-11 | s | RESISTOR BLOCK 100X2 |
| RB306 | 1-236-327-11 | s | RESISTOR BLOCK 150X2 |
| RB307 | 1-231-501-00 | s | RESISTOR BLOCK 470x4 |
| RB308 | 1-236-326-11 | s | RESISTOR BLOCK 100X2 |
| RB309 | 1-236-327-11 | s | RESISTOR BLOCK 150X2 |
| RB401 | 1-231-485-11 | s | RESISTOR BLOCK 100x4 |
| RB402 | 1-231-489-11 | s | RESISTOR BLOCK 150X4 |
| RB403 | 1-231-485-11 | s | RESISTOR BLOCK 100x4 |
| RB404 | 1-231-489-11 | s | RESISTOR BLOCK 150X4 |
| RB405 | 1-236-326-11 | s | RESISTOR BLOCK 100X2 |
| RB406 | 1-236-327-11 | s | RESISTOR BLOCK 150X2 |
| RB407 | 1-231-501-00 | s | RESISTOR BLOCK 470x4 |
| RB408 | 1-236-326-11 | s | RESISTOR BLOCK 100X2 |
| RB409 | 1-236-327-11 | s | RESISTOR BLOCK 150X2 |
| RV1 | 1-228-460-00 | s | RES, ADJ, METAL 20K |
| RV101 | 1-230-741-11 | s | RES, VAR, CARBON 10K |
| RV102 | 1-228-458-00 | s | RES, ADJ, METAL 5K |
| RV103 | 1-228-454-00 | s | RES, ADJ, CERMET 200 |
| RV104 | 1-228-459-00 | s | RES, ADJ, METAL 10K |
| RV105 | 1-228-453-00 | s | RES, ADJ, CERMET 100 |
| RV106 | 1-228-459-00 | s | RES, ADJ, METAL 10K |
| RV107 | 1-228-461-00 | s | RES, ADJ, CERMET 50K |
| RV108 | 1-228-456-00 | s | RES, ADJ, METAL 1K |
| RV109 | 1-228-461-00 | s | RES, ADJ, CERMET 50K |
| RV110 | 1-228-461-00 | s | RES, ADJ, CERMET 50K |
| RV111 | 1-228-460-00 | s | RES, ADJ, METAL 20K |
| RV201 | 1-230-741-11 | s | RES, VAR, CARBON 10K |
| RV202 | 1-228-458-00 | s | RES, ADJ, METAL 5K |
| RV203 | 1-228-454-00 | s | RES, ADJ, CERMET 200 |
| RV204 | 1-228-459-00 | s | RES, ADJ, METAL 10K |
| RV205 | 1-228-453-00 | s | RES, ADJ, CERMET 100 |
| RV206 | 1-228-459-00 | s | RES, ADJ, METAL 10K |
| RV207 | 1-228-461-00 | s | RES, ADJ, CERMET 50K |
| RV208 | 1-228-456-00 | s | RES, ADJ, METAL 1K |
| RV209 | 1-228-461-00 | s | RES, ADJ, CERMET 50K |
| RV210 | 1-228-461-00 | s | RES, ADJ, CERMET 50K |
| RV211 | 1-228-460-00 | s | RES, ADJ, METAL 20K |
| RV301 | 1-230-741-11 | s | RES, VAR, CARBON 10K |
| RV302 | 1-228-458-00 | s | RES, ADJ, METAL 5K |
| RV303 | 1-228-454-00 | s | RES, ADJ, CERMET 200 |
| RV304 | 1-228-459-00 | s | RES, ADJ, METAL 10K |
| RV305 | 1-228-453-00 | s | RES, ADJ, CERMET 100 |
| RV306 | 1-228-459-00 | s | RES, ADJ, METAL 10K |
| RV307 | 1-228-461-00 | s | RES, ADJ, CERMET 50K |
| RV308 | 1-228-456-00 | s | RES, ADJ, METAL 1K |
| RV309 | 1-228-461-00 | s | RES, ADJ, CERMET 50K |
| RV310 | 1-228-461-00 | s | RES, ADJ, CERMET 50K |
| RV311 | 1-228-460-00 | s | RES, ADJ, METAL 20K |
| RV401 | 1-230-741-11 | s | RES, VAR, CARBON 10K |
| RV402 | 1-228-458-00 | s | RES, ADJ, METAL 5K |
| RV403 | 1-228-454-00 | s | RES, ADJ, CERMET 200 |

(DRC-1 BOARD)

| Ref. No. or Q'ty | Part No. | SP | Description |
|---|---|---|---|
| RV404 | 1-228-459-00 | s | RES, ADJ, METAL 10K |
| RV405 | 1-228-453-00 | s | RES, ADJ, CERMET 100 |
| RV406 | 1-228-459-00 | s | RES, ADJ, METAL 10K |
| RV407 | 1-228-461-00 | s | RES, ADJ, CERMET 50K |
| RV408 | 1-228-456-00 | s | RES, ADJ, METAL 1K |
| RV409 | 1-228-461-00 | s | RES, ADJ, CERMET 50K |
| RV410 | 1-228-461-00 | s | RES, ADJ, CERMET 50K |
| RV411 | 1-228-460-00 | s | RES, ADJ, METAL 20K |

## DS-19 BOARD

| Ref. No. or Q'ty | Part No. | SP | Description |
|---|---|---|---|
| 1pc | A-6025-102-A | o | MOUNTED CIRCUIT BOARD, DS-19 |
| C1 | 1-161-055-00 | s | CERAMIC 0.022uF 10% 50V |
| C2 | 1-126-101-11 | s | ELECT 100uF 20% 16V |
| C3 | 1-124-943-11 | s | ELECT 39 20% 25V |
| C4 | 1-161-055-00 | s | CERAMIC 0.022uF 10% 50V |
| C5 | 1-161-055-00 | s | CERAMIC 0.022uF 10% 50V |
| C6 | 1-124-943-11 | s | ELECT 39 20% 25V |
| C7 | 1-161-055-00 | s | CERAMIC 0.022uF 10% 50V |
| C8 | 1-126-101-11 | s | ELECT 100uF 20% 16V |
| C9 | 1-161-055-00 | s | CERAMIC 0.022uF 10% 50V |
| C10 | 1-124-943-11 | s | ELECT 39 20% 25V |
| C11 | 1-161-055-00 | s | CERAMIC 0.022uF 10% 50V |
| C12 | 1-124-566-11 | s | ELECT 120uF 20% 6.3V |
| C13 | 1-161-055-00 | s | CERAMIC 0.022uF 10% 50V |
| C14 | 1-126-176-11 | s | ELECT 220uF 20% 10V |
| C15 | 1-161-055-00 | s | CERAMIC 0.022uF 10% 50V |
| C16 | 1-130-487-00 | s | MYLAR 0.022uF 5% 50V |
| C17 | 1-130-487-00 | s | MYLAR 0.022uF 5% 50V |
| C18 | 1-161-055-00 | s | CERAMIC 0.022uF 10% 50V |
| C19 | 1-130-487-00 | s | MYLAR 0.022uF 5% 50V |
| C20 | 1-130-487-00 | s | MYLAR 0.022uF 5% 50V |
| C21 | 1-130-487-00 | s | MYLAR 0.022uF 5% 50V |
| C22 | 1-161-055-00 | s | CERAMIC 0.022uF 10% 50V |
| C23 | 1-161-055-00 | s | CERAMIC 0.022uF 10% 50V |
| C24 | 1-130-483-00 | s | MYLAR 0.01uF 5% 50V |
| C25 | 1-130-483-00 | s | MYLAR 0.01uF 5% 50V |
| C26 | 1-130-483-00 | s | MYLAR 0.01uF 5% 50V |
| C27 | 1-130-483-00 | s | MYLAR 0.01uF 5% 50V |
| C28 | 1-130-495-00 | s | MYLAR 0.1uF 5% 50V |
| C29 | 1-130-495-00 | s | MYLAR 0.1uF 5% 50V |
| C30 | 1-130-495-00 | s | MYLAR 0.1uF 5% 50V |
| C31 | 1-130-495-00 | s | MYLAR 0.1uF 5% 50V |
| C32 | 1-126-233-11 | s | ELECT 22uF 20% 50V |
| C33 | 1-126-233-11 | s | ELECT 22uF 20% 50V |
| C34 | 1-126-233-11 | s | ELECT 22uF 20% 50V |
| CN001 | 1-560-300-00 | o | CONNECTOR, IL 3P, MALE |
| CN002 | 1-560-301-00 | o | CONNECTOR, IL 4P, MALE |
| CN003 | 1-560-302-00 | o | CONNECTOR, IL 5P, MALE |
| CN004 | 1-560-300-00 | o | CONNECTOR, IL 3P, MALE |
| CN005 | 1-560-301-00 | o | CONNECTOR, IL 4P, MALE |
| CN006 | 1-560-304-00 | o | CONNECTOR, IL 8P, MALE |
| CN007 | 1-560-301-00 | o | CONNECTOR, IL 4P, MALE |
| CN008 | 1-560-300-00 | o | CONNECTOR, IL 3P, MALE |
| CN009 | 1-560-300-00 | o | CONNECTOR, IL 3P, MALE |
| CN010 | 1-560-299-00 | o | CONNECTOR, IL 2P, MALE |
| CN011 | 1-560-300-00 | o | CONNECTOR, IL 3P, MALE |
| CN021 | 1-560-727-00 | o | CONNECTOR, 26P, MALE |
| CN022 | 1-560-303-00 | o | CONNECTOR, IL 6P, MALE |
| D1 | 8-719-200-02 | s | DIODE 10E2 |
| D2 | 8-719-200-02 | s | DIODE 10E2 |
| D3 | 8-719-200-02 | s | DIODE 10E2 |
| D4 | 8-719-200-02 | s | DIODE 10E2 |
| D5 | 8-719-911-19 | s | DIODE 1SS119 |
| D6 | 8-719-911-19 | s | DIODE 1SS119 |
| D7 | 8-719-911-19 | s | DIODE 1SS119 |
| D8 | 8-719-911-19 | s | DIODE 1SS119 |
| D9 | 8-719-911-19 | s | DIODE 1SS119 |
| D10 | 8-719-911-19 | s | DIODE 1SS119 |

(DS-19 BOARD)

| Ref. No. or Q'ty | Part No. | SP | Description |
|---|---|---|---|
| D11 | 8-719-911-19 | s | DIODE 1SS119 |
| D12 | 8-719-911-19 | s | DIODE 1SS119 |
| D13 | 8-719-911-19 | s | DIODE 1SS119 |
| D14 | 8-719-200-02 | s | DIODE 10E2 |
| D15 | 8-719-200-02 | s | DIODE 10E2 |
| D16 | 8-719-200-02 | s | DIODE 10E2 |
| D17 | 8-719-200-02 | s | DIODE 10E2 |
| D18 | 8-719-200-02 | s | DIODE 10E2 |
| D19 | 8-719-911-19 | s | DIODE 1SS119 |
| D20 | 8-719-911-19 | s | DIODE 1SS119 |
| D21 | 8-719-200-02 | s | DIODE 10E2 |
| IC1 | 8-759-135-80 | s | IC UPC358C |
| IC2 | 8-759-916-20 | s | IC SN74HC14N |
| IC3 | 8-759-133-90 | s | IC UPC339C |
| IC4 | 8-759-208-39 | s | IC MP4001 |
| IC5 | 8-759-645-16 | s | IC M54516P |
| L1 | 1-421-370-00 | s | COIL, CHOKE |
| L2 | 1-421-370-00 | s | COIL, CHOKE |
| L3 | 1-421-370-00 | s | COIL, CHOKE |
| L4 | 1-421-370-00 | s | COIL, CHOKE |
| Q1 | 8-729-119-78 | s | TRANSISTOR 2SC2785-HFE |
| Q2 | 8-729-119-78 | s | TRANSISTOR 2SC2785-HFE |
| Q3 | 8-729-900-61 | s | TRANSISTOR DTA114ES |
| Q4 | 8-729-119-78 | s | TRANSISTOR 2SC2785-HFE |
| Q7 | 8-729-378-84 | s | TRANSISTOR 2SD788 |
| Q8 | 8-729-140-93 | s | TRANSISTOR 2SB733-34 |
| Q9 | 8-729-119-78 | s | TRANSISTOR 2SC2785-HFE |
| Q10 | 8-729-900-80 | s | TRANSISTOR DTC114ES |
| Q11 | 8-729-119-76 | s | TRANSISTOR 2SA1115P |
| Q12 | 8-729-900-61 | s | TRANSISTOR DTA114ES |
| Q13 | 8-729-900-61 | s | TRANSISTOR DTA114ES |
| Q14 | 8-729-900-61 | s | TRANSISTOR DTA114ES |
| Q15 | 8-729-313-42 | s | TRANSISTOR 2SD1134 |
| Q16 | 8-729-900-61 | s | TRANSISTOR DTA114ES |
| Q17 | 8-729-378-84 | s | TRANSISTOR 2SD788 |
| R1 | 1-216-382-11 | s | METAL 0.27 5% 3W |
| R2 | 1-247-699-11 | s | CARBON 82 5% 1/4W |
| R3 | 1-249-417-11 | s | CARBON 1K 5% 1/4W |
| R4 | 1-249-429-11 | s | CARBON 10K 5% 1/4W |
| R5 | 1-249-429-11 | s | CARBON 10K 5% 1/4W |
| R8 | 1-216-359-00 | s | METAL 6.8 5% 1W |
| R9 | 1-249-409-11 | s | CARBON 220 5% 1/4W |
| R10 | 1-249-417-11 | s | CARBON 1K 5% 1/4W |
| R11 | 1-249-417-11 | s | CARBON 1K 5% 1/4W |
| R12 | 1-249-417-11 | s | CARBON 1K 5% 1/4W |
| R13 | 1-249-429-11 | s | CARBON 10K 5% 1/4W |
| R14 | 1-249-413-11 | s | CARBON 470 5% 1/4W |
| R15 | 1-249-429-11 | s | CARBON 10K 5% 1/4W |
| R16 | 1-249-421-11 | s | CARBON 2.2K 5% 1/4W |
| R17 | 1-249-421-11 | s | CARBON 2.2K 5% 1/4W |
| R18 | 1-249-417-11 | s | CARBON 1K 5% 1/4W |
| R19 | 1-249-429-11 | s | CARBON 10K 5% 1/4W |
| R20 | 1-249-423-11 | s | CARBON 3.3K 5% 1/4W |
| R21 | 1-249-417-11 | s | CARBON 1K 5% 1/4W |
| R22 | 1-249-429-11 | s | CARBON 10K 5% 1/4W |
| R23 | 1-249-423-11 | s | CARBON 3.3K 5% 1/4W |
| R24 | 1-249-433-11 | s | CARBON 22K 5% 1/4W |
| R25 | 1-215-436-00 | s | METAL 4.3K 1% 1/6W |

(DS-19 BOARD)

| Ref. No. or Q'ty | Part No. | SP | Description |
|---|---|---|---|
| R26 | 1-215-411-00 | s | METAL 390 1% 1/6W |
| R27 | 1-249-413-11 | s | CARBON 470 5% 1/4W |
| R28 | 1-215-390-00 | s | METAL 51 1% 1/6W |
| R29 | 1-249-437-11 | s | CARBON 47K 5% 1/4W |
| R30 | 1-215-445-00 | s | METAL 10K 1% 1/6W |
| R31 | 1-215-477-00 | s | METAL 220K 1% 1/6W |
| R32 | 1-215-449-00 | s | METAL 15K 1% 1/6W |
| R33 | 1-215-449-00 | s | METAL 15K 1% 1/6W |
| R34 | 1-215-485-00 | s | METAL 470K 1% 1/6W |
| R35 | 1-215-485-00 | s | METAL 470K 1% 1/6W |
| R36 | 1-249-429-11 | s | CARBON 10K 5% 1/4W |
| R37 | 1-249-437-11 | s | CARBON 47K 5% 1/4W |
| R38 | 1-247-891-00 | s | CARBON 330K 5% 1/4W |
| R39 | 1-249-417-11 | s | CARBON 1K 5% 1/4W |
| R40 | 1-249-429-11 | s | CARBON 10K 5% 1/4W |
| R41 | 1-249-437-11 | s | CARBON 47K 5% 1/4W |
| R42 | 1-247-891-00 | s | CARBON 330K 5% 1/4W |
| R43 | 1-249-417-11 | s | CARBON 1K 5% 1/4W |
| R44 | 1-249-429-11 | s | CARBON 10K 5% 1/4W |
| R45 | 1-249-437-11 | s | CARBON 47K 5% 1/4W |
| R46 | 1-247-891-00 | s | CARBON 330K 5% 1/4W |
| R47 | 1-249-417-11 | s | CARBON 1K 5% 1/4W |
| R48 | 1-249-429-11 | s | CARBON 10K 5% 1/4W |
| R49 | 1-249-437-11 | s | CARBON 47K 5% 1/4W |
| R50 | 1-247-891-00 | s | CARBON 330K 5% 1/4W |
| R51 | 1-249-417-11 | s | CARBON 1K 5% 1/4W |
| R52 | 1-249-439-11 | s | CARBON 68K 5% 1/4W |
| R53 | 1-249-421-11 | s | CARBON 2.2K 5% 1/4W |
| R54 | 1-249-429-11 | s | CARBON 10K 5% 1/4W |
| R55 | 1-247-901-11 | s | CARBON 820K 5% 1/4 |
| R56 | 1-249-417-11 | s | CARBON 1K 5% 1/4W |
| R57 | 1-249-423-11 | s | CARBON 3.3K 5% 1/4W |
| R58 | 1-249-421-11 | s | CARBON 2.2K 5% 1/4W |
| R59 | 1-249-429-11 | s | CARBON 10K 5% 1/4W |
| R60 | 1-247-901-11 | s | CARBON 820K 5% 1/4 |
| R61 | 1-249-417-11 | s | CARBON 1K 5% 1/4W |
| R62 | 1-249-423-11 | s | CARBON 3.3K 5% 1/4W |
| R63 | 1-249-421-11 | s | CARBON 2.2K 5% 1/4W |
| R64 | 1-249-429-11 | s | CARBON 10K 5% 1/4W |
| R65 | 1-247-901-11 | s | CARBON 820K 5% 1/4 |
| R66 | 1-249-417-11 | s | CARBON 1K 5% 1/4W |
| R67 | 1-249-423-11 | s | CARBON 3.3K 5% 1/4W |
| R68 | 1-249-421-11 | s | CARBON 2.2K 5% 1/4W |
| R69 | 1-249-429-11 | s | CARBON 10K 5% 1/4W |
| R70 | 1-247-901-11 | s | CARBON 820K 5% 1/4 |
| R71 | 1-249-417-11 | s | CARBON 1K 5% 1/4W |
| R72 | 1-249-433-11 | s | CARBON 22K 5% 1/4W |
| R73 | 1-249-409-11 | s | CARBON 220 5% 1/4W |
| R74 | 1-249-409-11 | s | CARBON 220 5% 1/4W |
| R75 | 1-249-409-11 | s | CARBON 220 5% 1/4W |
| R76 | 1-249-405-11 | s | CARBON 100 5% 1/4W |
| R77 | 1-249-423-11 | s | CARBON 3.3K 5% 1/4W |
| R78 | 1-249-413-11 | s | CARBON 470 5% 1/4W |
| R79 | 1-249-425-11 | s | CARBON 4.7K 5% 1/4W |

## EN-55 BOARD

| Ref. No. or Q'ty | Part No. | SP | Description |
|---|---|---|---|
| 2pcs | 1-563-088-11 | o | CONTACT, FEMALE, AWG24-30 |
| 1pc | 1-621-122-11 | o | PRINTED CIRCUIT BOARD, EN-55 |
| CN707 | 1-562-153-11 | o | HOUSING, 8P |
| CN708 | 1-562-155-11 | o | HOUSING, 10P |
| D1 | 8-719-911-19 | s | DIODE 1SS119 |
| D2 | 8-719-911-19 | s | DIODE 1SS119 |
| D3 | 8-719-911-19 | s | DIODE 1SS119 |
| D4 | 8-719-911-19 | s | DIODE 1SS119 |
| D5 | 8-719-911-19 | s | DIODE 1SS119 |
| D6 | 8-719-911-19 | s | DIODE 1SS119 |
| D7 | 8-719-911-19 | s | DIODE 1SS119 |
| D8 | 8-719-911-19 | s | DIODE 1SS119 |
| D9 | 8-719-911-19 | s | DIODE 1SS119 |
| D10 | 8-719-911-19 | s | DIODE 1SS119 |
| D11 | 8-719-911-19 | s | DIODE 1SS119 |
| D12 | 8-719-911-19 | s | DIODE 1SS119 |
| D13 | 8-719-911-19 | s | DIODE 1SS119 |
| D14 | 8-719-911-19 | s | DIODE 1SS119 |
| D15 | 8-719-911-19 | s | DIODE 1SS119 |
| D16 | 8-719-911-19 | s | DIODE 1SS119 |
| D17 | 8-719-911-19 | s | DIODE 1SS119 |
| D18 | 8-719-911-19 | s | DIODE 1SS119 |
| D19 | 8-719-911-19 | s | DIODE 1SS119 |
| D20 | 8-719-911-19 | s | DIODE 1SS119 |
| D21 | 8-719-911-19 | s | DIODE 1SS119 |
| D22 | 8-719-800-39 | s | LED TLY211, YEL |
| D23 | 8-719-800-39 | s | LED TLY211, YEL |
| D24 | 8-719-800-39 | s | LED TLY211, YEL |
| D25 | 8-719-800-39 | s | LED TLY211, YEL |
| D26 | 8-719-800-39 | s | LED TLY211, YEL |
| D27 | 8-719-800-39 | s | LED TLY211, YEL |
| D28 | 8-719-800-39 | s | LED TLY211, YEL |
| D29 | 8-719-800-39 | s | LED TLY211, YEL |
| D30 | 8-719-800-39 | s | LED TLY211, YEL |
| D31 | 8-719-800-39 | s | LED TLY211, YEL |
| D32 | 8-719-800-39 | s | LED TLY211, YEL |
| R1 | 1-249-411-11 | s | CARBON 330 5% 1/4W |
| R2 | 1-249-411-11 | s | CARBON 330 5% 1/4W |
| R3 | 1-249-411-11 | s | CARBON 330 5% 1/4W |
| R4 | 1-249-411-11 | s | CARBON 330 5% 1/4W |
| R5 | 1-249-411-11 | s | CARBON 330 5% 1/4W |

## ES BOARD

| Ref. No. or Q'ty | Part No. | SP | Description |
|---|---|---|---|
| 1pc | 1-560-298-00 | o | CONTACT, IL, FEMALE AWG22-28 |
| 2pcs | 1-621-118-11 | o | PRINTED CIRCUIT BOARD, PS-143 |
| 2pcs | 7-682-648-09 | s | SCREW +PS 3X8 |
| 2pcs | 3-714-609-01 | o | SHEET, SENSOR FITTING |
| CN007 | 1-509-985-00 | o | HOUSING, IL 4P |
| D1 | 8-719-123-69 | s | DIODE SE310 |
| Q1 | 8-729-116-45 | s | PHOTOTRANSISTOR PH110 |

## EX-136 BOARD

| Ref. No. or Q'ty | Part No. | SP | Description |
|---|---|---|---|
| 8pcs | 7-622-207-05 | s | N 2.6, TYPE 2 |
| 8pcs | 7-628-254-40 | s | SCREW +PS 2.6X12 |
| CNA1 | 1-563-341-11 | s | CONNECTOR, DIN 96P, FEMALE |
| CNA2 | 1-506-748-11 | s | CONNECTOR, DIN 96P, MALE |
| CNB1 | 1-563-341-11 | s | CONNECTOR, DIN 96P, FEMALE |
| CNB2 | 1-506-748-11 | s | CONNECTOR, DIN 96P, MALE |

## FE-05 BOARD

| Ref. No. or Q'ty | Part No. | SP | Description |
|---|---|---|---|
| 1pc | A-6011-128-A | o | MOUNTED CIRCUIT BOARD, FE-05 |
| C1 | 1-107-204-00 | s | MICA 12PF 5% 500V |
| C2 | 1-107-204-00 | s | MICA 12PF 5% 500V |
| C3 | 1-107-075-00 | s | MICA 39PF 5% 50V |
| C4 | 1-161-051-00 | s | CERAMIC 0.01uF 10% 50V |
| C5 | 1-161-051-00 | s | CERAMIC 0.01uF 10% 50V |
| C6 | 1-124-477-11 | s | ELECT 47uF 20% 25V |
| C7 | 1-161-051-00 | s | CERAMIC 0.01uF 10% 50V |
| C8 | 1-161-051-00 | s | CERAMIC 0.01uF 10% 50V |
| C9 | 1-124-477-11 | s | ELECT 47uF 20% 25V |
| C10 | 1-107-204-00 | s | MICA 12PF 5% 500V |
| C11 | 1-107-204-00 | s | MICA 12PF 5% 500V |
| C12 | 1-107-075-00 | s | MICA 39PF 5% 50V |
| C13 | 1-161-051-00 | s | CERAMIC 0.01uF 10% 50V |
| C14 | 1-161-051-00 | s | CERAMIC 0.01uF 10% 50V |
| C15 | 1-124-477-11 | s | ELECT 47uF 20% 25V |
| C16 | 1-161-051-00 | s | CERAMIC 0.01uF 10% 50V |
| C17 | 1-161-051-00 | s | CERAMIC 0.01uF 10% 50V |
| C18 | 1-124-477-11 | s | ELECT 47uF 20% 25V |
| C20 | 1-161-051-00 | s | CERAMIC 0.01uF 10% 50V |
| C24 | 1-124-477-11 | s | ELECT 47uF 20% 25V |
| C25 | 1-161-051-00 | s | CERAMIC 0.01uF 10% 50V |
| C26 | 1-161-051-00 | s | CERAMIC 0.01uF 10% 50V |
| C27 | 1-124-477-11 | s | ELECT 47uF 20% 25V |
| C28 | 1-161-051-00 | s | CERAMIC 0.01uF 10% 50V |
| C29 | 1-161-051-00 | s | CERAMIC 0.01uF 10% 50V |
| C39 | 1-161-051-00 | s | CERAMIC 0.01uF 10% 50V |
| C40 | 1-161-051-00 | s | CERAMIC 0.01uF 10% 50V |
| CN261 | 1-560-302-00 | o | CONNECTOR, IL 5P, MALE |
| CN262 | 1-560-301-00 | o | CONNECTOR, IL 4P, MALE |
| CN263 | 1-560-300-00 | o | CONNECTOR, IL 3P, MALE |
| CN264 | 1-560-300-00 | o | CONNECTOR, IL 3P, MALE |
| CV1 | 1-141-245-00 | s | CAP, TRIMMER 30PF |
| CV2 | 1-141-245-00 | s | CAP, TRIMMER 30PF |
| D3 | 8-719-911-19 | s | DIODE 1SS119 |
| L4 | 1-421-329-00 | s | COIL, CHOKE |
| L5 | 1-421-329-00 | s | COIL, CHOKE |
| NF1 | 1-162-617-11 | s | CERAMIC 0.022 50V |
| NF2 | 1-162-617-11 | s | CERAMIC 0.022 50V |
| NF3 | 1-162-617-11 | s | CERAMIC 0.022 50V |
| NF4 | 1-162-617-11 | s | CERAMIC 0.022 50V |
| Q1 | 8-729-125-20 | s | TRANSISTOR 2SC1252 |
| Q2 | 8-729-125-20 | s | TRANSISTOR 2SC1252 |
| Q3 | 8-729-140-96 | s | TRANSISTOR 2SD774-4 |
| Q4 | 8-729-125-20 | s | TRANSISTOR 2SC1252 |
| Q5 | 8-729-125-20 | s | TRANSISTOR 2SC1252 |
| Q6 | 8-729-140-96 | s | TRANSISTOR 2SD774-4 |
| Q9 | 8-729-900-61 | s | TRANSISTOR DTA114ES |
| Q10 | 8-729-900-61 | s | TRANSISTOR DTA114ES |
| Q11 | 8-729-900-61 | s | TRANSISTOR DTA114ES |
| Q12 | 8-729-110-52 | s | TRANSISTOR 2SA1005-L |
| R1 | 1-215-385-00 | s | METAL 33 1% 1/6W |
| R2 | 1-215-385-00 | s | METAL 33 1% 1/6W |
| R3 | 1-215-431-00 | s | METAL 2.7K 1% 1/6W |
| R4 | 1-215-431-00 | s | METAL 2.7K 1% 1/6W |
| R5 | 1-215-413-00 | s | METAL 470 1% 1/6W |

(FE-5 BOARD)

| Ref. No. or Q'ty | Part No. | SP | Description |
|---|---|---|---|
| R6 | 1-215-413-00 | s | METAL 470 1% 1/6W |
| R7 | 1-215-411-00 | s | METAL 390 1% 1/6W |
| R8 | 1-215-377-00 | s | METAL 15 1% 1/6W |
| R9 | 1-215-377-00 | s | METAL 15 1% 1/6W |
| R10 | 1-215-373-31 | s | METAL 10 1% 1/6W |
| R11 | 1-215-443-00 | s | METAL 8.2K 1% 1/6W |
| R12 | 1-215-417-00 | s | METAL 680 1% 1/6W |
| R13 | 1-215-385-00 | s | METAL 33 1% 1/6W |
| R14 | 1-215-385-00 | s | METAL 33 1% 1/6W |
| R15 | 1-215-431-00 | s | METAL 2.7K 1% 1/6W |
| R16 | 1-215-431-00 | s | METAL 2.7K 1% 1/6W |
| R17 | 1-215-413-00 | s | METAL 470 1% 1/6W |
| R18 | 1-215-413-00 | s | METAL 470 1% 1/6W |
| R19 | 1-215-411-00 | s | METAL 390 1% 1/6W |
| R20 | 1-215-377-00 | s | METAL 15 1% 1/6W |
| R21 | 1-215-377-00 | s | METAL 15 1% 1/6W |
| R22 | 1-215-373-31 | s | METAL 10 1% 1/6W |
| R23 | 1-215-443-00 | s | METAL 8.2K 1% 1/6W |
| R24 | 1-215-417-00 | s | METAL 680 1% 1/6W |
| R31 | 1-215-429-00 | s | METAL 2.2K 1% 1/6W |
| R32 | 1-215-445-00 | s | METAL 10K 1% 1/6W |
| RV1 | 1-224-978-00 | s | RES, ADJ, METAL 50 |
| RV2 | 1-224-978-00 | s | RES, ADJ, METAL 50 |
| RY1 | 1-515-614-11 | s | RELAY |
| T1 | 1-427-597-11 | s | TRANSFORMER, OUTPUT |
| T2 | 1-427-597-11 | s | TRANSFORMER, OUTPUT |

## HD-06 BOARD

| Ref. No. or Q'ty | Part No. | SP | Description |
|---|---|---|---|
| 1pc | 1-606-679-00 | o | PRINTED CIRCUIT BOARD, HD-06 |
| C1 | 1-107-204-00 | s | MICA 12PF 5% 500V |

## IF-207 BOARD

| Ref. No. or Q'ty | Part No. | SP | Description |
|---|---|---|---|
| 1pc | A-6021-008-A | o | MOUNTED CIRCUIT BOARD, IF-207 |
| 4pcs | 7-622-207-05 | s | N 2.6, TYPE 2 |
| 4pcs | 7-628-254-40 | s | SCREW +PS 2.6X12 |
| 6pcs | 7-682-948-01 | s | SCREW +PSW 3X8 |
| 2pcs | 3-576-921-00 | s | SPRING, COMPRESSION |
| 2pcs | 3-714-855-21 | o | SPACER, REAR PANEL |
| 2pcs | 3-845-334-11 | s | SCREW, ORNAMENTAL |
| 2pcs | 7-623-956-41 | s | WASHER 5.0, FIBER |
| 4pcs | 7-682-948-01 | s | SCREW +PSW 3X8 |
| 2pcs | 7-688-004-01 | s | W 4, SMALL |
| 6pcs | 7-623-953-41 | s | WASHER 2.6, FIBER |
| C1 | 1-161-485-00 | s | CERAMIC 0.1uF 50V |
| C2 | 1-161-485-00 | s | CERAMIC 0.1uF 50V |
| C3 | 1-161-485-00 | s | CERAMIC 0.1uF 50V |
| C4 | 1-124-566-11 | s | ELECT 120uF 20% 6.3V |
| C5 | 1-161-890-11 | s | CERAMIC 0.022uF 50V |
| C6 | 1-161-890-11 | s | CERAMIC 0.022uF 50V |
| C7 | 1-124-566-11 | s | ELECT 120uF 20% 6.3V |
| C8 | 1-161-485-00 | s | CERAMIC 0.1uF 50V |
| C9 | 1-161-485-00 | s | CERAMIC 0.1uF 50V |
| C10 | 1-161-485-00 | s | CERAMIC 0.1uF 50V |
| C11 | 1-161-485-00 | s | CERAMIC 0.1uF 50V |
| C12 | 1-161-485-00 | s | CERAMIC 0.1uF 50V |
| CN320 | 1-563-763-11 | o | CONNECTOR, 30P, MALE |
| CN321 | 1-563-455-11 | s | CONNECTOR, 44P, MALE |
| CN651 | 1-563-781-21 | s | CONNECTOR, D-SUB 50P, FEMALE |
| CN652 | 1-563-323-11 | s | CONNECTOR, D-SUB 9P, FEMALE |
| CN653 | 1-566-472-21 | s | CONNECTOR, D-SUB 50P, MALE |
| CP1 | 1-233-089-11 | s | COMPOSITION CIRCUIT BLOCK |
| CP2 | 1-233-089-11 | s | COMPOSITION CIRCUIT BLOCK |
| CP3 | 1-233-089-11 | s | COMPOSITION CIRCUIT BLOCK |
| CP4 | 1-233-089-11 | s | COMPOSITION CIRCUIT BLOCK |
| CP5 | 1-233-089-11 | s | COMPOSITION CIRCUIT BLOCK |
| CP6 | 1-233-089-11 | s | COMPOSITION CIRCUIT BLOCK |
| CP7 | 1-233-089-11 | s | COMPOSITION CIRCUIT BLOCK |
| CP8 | 1-233-089-11 | s | COMPOSITION CIRCUIT BLOCK |
| CP9 | 1-233-089-11 | s | COMPOSITION CIRCUIT BLOCK |
| CP10 | 1-233-089-11 | s | COMPOSITION CIRCUIT BLOCK |
| CP11 | 1-233-089-11 | s | COMPOSITION CIRCUIT BLOCK |
| CP12 | 1-233-089-11 | s | COMPOSITION CIRCUIT BLOCK |
| CR1 | 1-231-456-00 | s | ENCAPSULATED COMPONENTS, CR |
| CR2 | 1-231-456-00 | s | ENCAPSULATED COMPONENTS, CR |
| CR3 | 1-231-456-00 | s | ENCAPSULATED COMPONENTS, CR |
| CR4 | 1-231-456-00 | s | ENCAPSULATED COMPONENTS, CR |
| IC1 | 8-759-938-68 | s | IC CXD1095Q |
| IC2 | 8-759-645-16 | s | IC M54516P |
| IC3 | 8-759-645-16 | s | IC M54516P |
| IC4 | 8-759-645-16 | s | IC M54516P |
| IC5 | 8-759-502-77 | s | IC SN74LS139AN |
| IC6 | 8-759-938-68 | s | IC CXD1095Q |
| IC7 | 8-759-926-32 | s | IC AM26LS32PC |
| IC8 | 8-759-926-32 | s | IC AM26LS32PC |
| IC9 | 8-759-926-31 | s | IC AM26LS31PC |
| IC10 | 8-759-926-31 | s | IC AM26LS31PC |
| IC11 | 8-759-926-31 | s | IC AM26LS31PC |
| L1 | 1-421-329-00 | s | COIL, CHOKE |
| R1 | 1-215-445-00 | s | METAL 10K 1% 1/6W |
| R2 | 1-215-428-00 | s | METAL 2K 1% 1/6W |
| R3 | 1-215-428-00 | s | METAL 2K 1% 1/6W |
| R4 | 1-214-564-00 | s | METAL 2K 1% 1/8W |
| RB1 | 1-231-533-00 | s | RESISTOR BLOCK 10Kx4 |
| RB2 | 1-231-410-00 | s | RESISTOR BLOCK 10Kx8 |
| SW1 | 1-516-923-21 | s | SWITCH, DIP 4-CKT |

## KC-14 BOARD

| Ref. No. or Q'ty | Part No. | SP | Description |
|---|---|---|---|
| 1pc | A-6017-153-A | o | MOUNTED CIRCUIT BOARD, KC-14 |
| 2pcs | 7-682-947-01 | s | SCREW +PSW 3X6 |
| 1pc | 7-682-647-09 | s | SCREW +PS 3X6 |
| 1pc | 7-684-023-04 | s | N 3, TYPE 2 |
| BZ101 | 1-529-025-00 | s | BUZZER |
| C101 | 1-126-103-11 | s | ELECT 470uF 20% 16V |
| C102 | 1-126-103-11 | s | ELECT 470uF 20% 16V |
| C103 | 1-131-347-00 | s | TANTALUM 1uF 10% 35V |
| C104 | 1-130-487-00 | s | MYLAR 0.022uF 5% 50V |
| C105 | 1-102-106-00 | s | CERAMIC 100PF 10% 50V |
| C106 | 1-130-471-00 | s | MYLAR 0.001uF 5% 50V |
| C107 | 1-124-518-11 | s | ELECT 470uF 20% 6.3V |
| C108 | 1-124-918-11 | s | ELECT 47 20% 63V |
| C109 | 1-130-487-00 | s | MYLAR 0.022uF 5% 50V |
| C110 | 1-130-483-00 | s | MYLAR 0.01uF 5% 50V |
| C111 | 1-161-055-00 | s | CERAMIC 0.022uF 10% 50V |
| C112 | 1-130-483-00 | s | MYLAR 0.01uF 5% 50V |
| C113 | 1-102-074-00 | s | CERAMIC 0.001uF 10% 50V |
| C114 | 1-124-773-11 | s | ELECT 27 20% 63V |
| C115 | 1-124-773-11 | s | ELECT 27 20% 63V |
| C116 | 1-161-055-00 | s | CERAMIC 0.022uF 10% 50V |
| C117 | 1-131-347-00 | s | TANTALUM 1uF 10% 35V |
| C118 | 1-130-477-00 | s | MYLAR 0.0033uF 5% 50V |
| C119 | 1-102-114-00 | s | CERAMIC 470PF 10% 50V |
| C120 | 1-130-471-00 | s | MYLAR 0.001uF 5% 50V |
| C121 | 1-126-157-11 | s | ELECT 10uF 20% 16V |
| C122 | 1-161-055-00 | s | CERAMIC 0.022uF 10% 50V |
| C123 | 1-161-055-00 | s | CERAMIC 0.022uF 10% 50V |
| C124 | 1-130-470-00 | s | CAP, MYLAR 820pF 5% 50V |
| C125 | 1-130-477-00 | s | MYLAR 0.0033uF 5% 50V |
| C126 | 1-161-055-00 | s | CERAMIC 0.022uF 10% 50V |
| C127 | 1-161-055-00 | s | CERAMIC 0.022uF 10% 50V |
| C128 | 1-161-055-00 | s | CERAMIC 0.022uF 10% 50V |
| C129 | 1-161-055-00 | s | CERAMIC 0.022uF 10% 50V |
| C130 | 1-161-055-00 | s | CERAMIC 0.022uF 10% 50V |
| C131 | 1-161-055-00 | s | CERAMIC 0.022uF 10% 50V |
| C132 | 1-161-055-00 | s | CERAMIC 0.022uF 10% 50V |
| C133 | 1-161-055-00 | s | CERAMIC 0.022uF 10% 50V |
| C134 | 1-161-055-00 | s | CERAMIC 0.022uF 10% 50V |
| C135 | 1-161-055-00 | s | CERAMIC 0.022uF 10% 50V |
| C136 | 1-161-055-00 | s | CERAMIC 0.022uF 10% 50V |
| C137 | 1-161-055-00 | s | CERAMIC 0.022uF 10% 50V |
| C138 | 1-161-055-00 | s | CERAMIC 0.022uF 10% 50V |
| C139 | 1-161-055-00 | s | CERAMIC 0.022uF 10% 50V |
| C140 | 1-161-055-00 | s | CERAMIC 0.022uF 10% 50V |
| C141 | 1-161-055-00 | s | CERAMIC 0.022uF 10% 50V |
| C142 | 1-161-055-00 | s | CERAMIC 0.022uF 10% 50V |
| C143 | 1-161-055-00 | s | CERAMIC 0.022uF 10% 50V |
| C144 | 1-161-055-00 | s | CERAMIC 0.022uF 10% 50V |
| C145 | 1-161-055-00 | s | CERAMIC 0.022uF 10% 50V |
| C146 | 1-161-055-00 | s | CERAMIC 0.022uF 10% 50V |
| C147 | 1-161-055-00 | s | CERAMIC 0.022uF 10% 50V |
| C148 | 1-161-055-00 | s | CERAMIC 0.022uF 10% 50V |
| C149 | 1-161-055-00 | s | CERAMIC 0.022uF 10% 50V |
| CN701 | 1-563-769-11 | s | CONNECTOR, 8P, FEMALE |
| CN702 | 1-564-494-11 | o | CONNECTOR, 60P, MALE |
| CN703 | 1-564-493-11 | o | CONNECTOR, 40P, MALE |
| CN704 | 1-564-494-11 | o | CONNECTOR, 60P, MALE |

(KC-14 BOARD)

| Ref. No. or Q'ty | Part No. | SP | Description |
|---|---|---|---|
| D101 | 8-719-907-25 | s | DIODE ERA84-009 |
| D102 | 8-719-110-13 | s | DIODE RD9.1ES-B2 |
| D103 | 8-719-911-19 | s | DIODE 1SS119 |
| D104 | 8-719-911-19 | s | DIODE 1SS119 |
| D105 | 8-719-907-25 | s | DIODE ERA84-009 |
| D106 | 8-719-911-19 | s | DIODE 1SS119 |
| ICA4 | 8-759-904-94 | s | IC TL494CN |
| ICB3 | 8-759-904-94 | s | IC TL494CN |
| ICC2 | 8-759-909-15 | s | IC MSL915RS |
| ICC3 | 8-759-995-10 | s | IC MSL9510RS |
| ICC4 | 8-759-909-15 | s | IC MSL915RS |
| ICC5 | 8-759-202-61 | s | IC MSM4094RS |
| ICC7 | 8-759-008-57 | s | IC MC34051P |
| ICD2 | 8-759-909-15 | s | IC MSL915RS |
| ICD3 | 8-759-995-10 | s | IC MSL9510RS |
| ICD4 | 8-759-909-15 | s | IC MSL915RS |
| ICD5 | 8-759-202-61 | s | IC MSM4094RS |
| ICD6 | 8-759-916-16 | s | IC MC74HC08AN |
| ICE2 | 8-759-909-15 | s | IC MSL915RS |
| ICE3 | 8-759-202-61 | s | IC MSM4094RS |
| ICE4 | 8-759-909-15 | s | IC MSL915RS |
| ICE5 | 8-759-202-61 | s | IC MSM4094RS |
| ICE6 | 8-759-239-59 | s | IC TC74HC221AP |
| ICE7 | 8-759-916-29 | s | IC SN74HC74N |
| ICF2 | 8-759-909-15 | s | IC MSL915RS |
| ICF3 | 8-759-202-61 | s | IC MSM4094RS |
| ICF4 | 8-759-916-25 | s | IC SN74HC32N |
| ICF5 | 8-759-916-12 | s | IC SN74HC00N |
| ICF6 | 8-759-901-38 | s | IC SN74LS138N |
| ICF7 | 8-759-910-43 | s | IC CX23028 |
| ICG2 | 8-759-909-15 | s | IC MSL915RS |
| ICG3 | 8-759-202-61 | s | IC MSM4094RS |
| ICG5 | 8-759-148-56 | s | IC UPD78C10AGQ-36 |
| ICG7 | 8-759-917-11 | s | IC SN74HC393N |
| ICH1 | 8-759-995-10 | s | IC MSL9510RS |
| ICH2 | 8-759-909-15 | s | IC MSL915RS |
| ICH3 | 8-759-202-61 | s | IC MSM4094RS |
| ICH7 | 8-759-916-14 | s | IC SN74HC04N |
| ICJ1 | 8-759-909-15 | s | IC MSL915RS |
| ICJ2 | 8-759-909-15 | s | IC MSL915RS |
| ICJ3 | 8-759-202-61 | s | IC MSM4094RS |
| ICJ5 | 8-759-730-37 | s | IC 27C64-KCH1-0-0, EPROM |
| ICJ6 | 8-752-325-19 | s | IC CXK5816SP-15L |
| ICJ7 | 8-759-916-18 | s | IC SN74HC10N |
| ICK1 | 8-759-909-15 | s | IC MSL915RS |
| ICK2 | 8-759-909-15 | s | IC MSL915RS |
| ICK3 | 8-759-202-61 | s | IC MSM4094RS |
| ICK4 | 8-759-916-94 | s | IC SN74HC373N |
| ICK7 | 8-759-916-25 | s | IC SN74HC32N |
| ICM1 | 8-759-995-10 | s | IC MSL9510RS |
| ICM2 | 8-759-909-15 | s | IC MSL915RS |
| ICM3 | 8-759-995-10 | s | IC MSL9510RS |
| ICM4 | 8-759-909-15 | s | IC MSL915RS |
| ICM5 | 8-759-202-61 | s | IC MSM4094RS |

(KC-14 BOARD)

| Ref. No. or Q'ty | Part No. | SP | Description |
|---|---|---|---|
| L101 | 1-421-370-00 | s | COIL, CHOKE |
| L102 | 1-409-339-00 | s | COIL, CHOKE |
| L103 | 1-413-057-00 | s | TRANSFORMER |
| L104 | 1-421-370-00 | s | COIL, CHOKE |
| Q101 | 8-729-320-62 | s | TRANSISTOR 2SD789-34 |
| Q102 | 8-729-320-62 | s | TRANSISTOR 2SD789-34 |
| Q103 | 8-729-907-71 | s | TRANSISTOR 2SA1077 |
| Q104 | 8-729-900-36 | s | TRANSISTOR DTC124ES |
| R101 | 1-249-429-11 | s | CARBON 10K 5% 1/4W |
| R102 | 1-249-419-11 | s | CARBON 1.5K 5% 1/4W |
| R103 | 1-249-421-11 | s | CARBON 2.2K 5% 1/4W |
| R104 | 1-249-435-11 | s | CARBON 33K 5% 1/4W |
| R105 | 1-249-441-11 | s | CARBON 100K 5% 1/4W |
| R106 | 1-249-435-11 | s | CARBON 33K 5% 1/4W |
| R107 | 1-249-426-11 | s | CARBON 5.6K 5% 1/4W |
| R108 | 1-249-429-11 | s | CARBON 10K 5% 1/4W |
| R109 | 1-249-405-11 | s | CARBON 100 5% 1/4W |
| R111 | 1-249-405-11 | s | CARBON 100 5% 1/4W |
| R112 | 1-215-857-11 | s | METAL 10 5% 1W |
| R113 | 1-249-400-11 | s | CARBON 39 5% 1/4W |
| R114 | 1-249-411-11 | s | CARBON 330 5% 1/4W |
| R115 | 1-249-417-11 | s | CARBON 1K 5% 1/4W |
| R116 | 1-249-431-11 | s | CARBON 15K 5% 1/4W |
| R117 | 1-215-453-00 | s | METAL 22K 1% 1/6W |
| R118 | 1-215-429-00 | s | METAL 2.2K 1% 1/6W |
| R119 | 1-249-429-11 | s | CARBON 10K 5% 1/4W |
| R120 | 1-249-437-11 | s | CARBON 47K 5% 1/4W |
| R121 | 1-249-420-11 | s | CARBON 1.8K 5% 1/4W |
| R122 | 1-249-435-11 | s | CARBON 33K 5% 1/4W |
| R123 | 1-249-393-11 | s | CARBON 10 5% 1/4W |
| R126 | 1-249-393-11 | s | CARBON 10 5% 1/4W |
| R127 | 1-249-437-11 | s | CARBON 47K 5% 1/4W |
| R128 | 1-249-437-11 | s | CARBON 47K 5% 1/4W |
| R129 | 1-249-429-11 | s | CARBON 10K 5% 1/4W |
| R130 | 1-249-437-11 | s | CARBON 47K 5% 1/4W |
| R131 | 1-249-437-11 | s | CARBON 47K 5% 1/4W |
| R132 | 1-249-437-11 | s | CARBON 47K 5% 1/4W |
| R133 | 1-215-421-00 | s | METAL 1K 1% 1/6W |
| R134 | 1-249-433-11 | s | CARBON 22K 5% 1/4W |
| R135 | 1-249-433-11 | s | CARBON 22K 5% 1/4W |
| R136 | 1-249-405-11 | s | CARBON 100 5% 1/4W |
| R137 | 1-249-437-11 | s | CARBON 47K 5% 1/4W |
| RB101 | 1-231-410-00 | s | RESISTOR BLOCK 10Kx8 |
| RB102 | 1-235-005-00 | s | RESISTOR BLOCK 47Kx8 |
| RB103 | 1-231-411-00 | s | RESISTOR BLOCK 100Kx8 |
| RB104 | 1-231-411-00 | s | RESISTOR BLOCK 100Kx8 |
| RB105 | 1-231-411-00 | s | RESISTOR BLOCK 100Kx8 |
| RB106 | 1-231-411-00 | s | RESISTOR BLOCK 100Kx8 |
| RB107 | 1-231-411-00 | s | RESISTOR BLOCK 100Kx8 |
| RB108 | 1-231-411-00 | s | RESISTOR BLOCK 100Kx8 |
| RB109 | 1-231-411-00 | s | RESISTOR BLOCK 100Kx8 |
| RB110 | 1-231-411-00 | s | RESISTOR BLOCK 100Kx8 |
| RB111 | 1-231-411-00 | s | RESISTOR BLOCK 100Kx8 |
| RB112 | 1-231-411-00 | s | RESISTOR BLOCK 100Kx8 |
| RV101 | 1-237-515-21 | s | RES, ADJ, METAL 1K |
| S101 | 1-553-856-00 | s | SWITCH, TACTILE |
| S102 | 1-553-856-00 | s | SWITCH, TACTILE |

(KC-14 BOARD)

| Ref. No. or Q'ty | Part No. | SP | Description |
|---|---|---|---|
| T101 | 1-448-768-12 | s | TRANSFORMER, HEATER |
| X101 | 1-567-796-11 | s | OSCILLATOR, CRYSTAL 14.7456MHz |

## KY-139 BOARD

| Ref. No. or Q'ty | Part No. | SP | Description |
|---|---|---|---|
| 1pc | A-6017-152-A | o | MOUNTED CIRCUIT BOARD, KY-139 |
| 1pc | 1-563-088-11 | o | CONTACT, FEMALE, AWG24-30 |
| 3pcs | 3-670-095-00 | o | HOLDER, LED |
| 2pcs | 2-252-640-00 | s | KNOB, TACT SWITSH |
| 3pcs | 3-670-095-00 | o | HOLDER, LED |
| C1 | 1-161-055-00 | s | CERAMIC 0.022uF 10% 50V |
| C2 | 1-161-055-00 | s | CERAMIC 0.022uF 10% 50V |
| C3 | 1-161-055-00 | s | CERAMIC 0.022uF 10% 50V |
| C4 | 1-161-055-00 | s | CERAMIC 0.022uF 10% 50V |
| C5 | 1-161-055-00 | s | CERAMIC 0.022uF 10% 50V |
| C6 | 1-161-055-00 | s | CERAMIC 0.022uF 10% 50V |
| CN1 | 1-562-151-11 | o | HOUSING, 6P |
| CN702 | 1-562-485-11 | o | CONNECTOR, 60P, FEMALE |
| CN703 | 1-562-484-11 | o | CONNECTOR, 40P, FEMALE |
| CN704 | 1-562-485-11 | o | CONNECTOR, 60P, FEMALE |
| CN705 | 1-506-473-11 | o | CONNECTOR, 8P, MALE |
| CN706 | 1-506-475-11 | o | CONNECTOR, 10P, MALE |
| CN707 | 1-506-487-11 | o | CONNECTOR, 8P, MALE |
| CN708 | 1-506-489-11 | o | CONNECTOR, 10P, MALE |
| D1 | 8-719-911-19 | s | DIODE 1SS119 |
| D2 | 8-719-911-19 | s | DIODE 1SS119 |
| D3 | 8-719-911-19 | s | DIODE 1SS119 |
| D4 | 8-719-911-19 | s | DIODE 1SS119 |
| D5 | 8-719-911-19 | s | DIODE 1SS119 |
| D6 | 8-719-911-19 | s | DIODE 1SS119 |
| D7 | 8-719-911-19 | s | DIODE 1SS119 |
| D8 | 8-719-911-19 | s | DIODE 1SS119 |
| D9 | 8-719-911-19 | s | DIODE 1SS119 |
| D10 | 8-719-911-19 | s | DIODE 1SS119 |
| D11 | 8-719-911-19 | s | DIODE 1SS119 |
| D12 | 8-719-911-19 | s | DIODE 1SS119 |
| D13 | 8-719-911-19 | s | DIODE 1SS119 |
| D14 | 8-719-911-19 | s | DIODE 1SS119 |
| D15 | 8-719-911-19 | s | DIODE 1SS119 |
| D16 | 8-719-911-19 | s | DIODE 1SS119 |
| D17 | 8-719-911-19 | s | DIODE 1SS119 |
| D18 | 8-719-911-19 | s | DIODE 1SS119 |
| D19 | 8-719-911-19 | s | DIODE 1SS119 |
| D20 | 8-719-911-19 | s | DIODE 1SS119 |
| D21 | 8-719-911-19 | s | DIODE 1SS119 |
| D22 | 8-719-911-19 | s | DIODE 1SS119 |
| D23 | 8-719-911-19 | s | DIODE 1SS119 |
| D24 | 8-719-911-19 | s | DIODE 1SS119 |
| D25 | 8-719-911-19 | s | DIODE 1SS119 |
| D26 | 8-719-911-19 | s | DIODE 1SS119 |
| D27 | 8-719-911-19 | s | DIODE 1SS119 |
| D28 | 8-719-911-19 | s | DIODE 1SS119 |
| D29 | 8-719-911-19 | s | DIODE 1SS119 |
| D30 | 8-719-905-55 | s | LED EAA5504S, AMBER |
| D31 | 8-719-905-55 | s | LED EAA5504S, AMBER |
| D32 | 8-719-905-55 | s | LED EAA5504S, AMBER |
| D33 | 8-719-905-55 | s | LED EAA5504S, AMBER |
| D34 | 8-719-905-55 | s | LED EAA5504S, AMBER |
| D35 | 8-719-905-55 | s | LED EAA5504S, AMBER |
| D36 | 8-719-940-83 | s | LED LT9101N, YEL-GRN |
| D37 | 8-719-940-83 | s | LED LT9101N, YEL-GRN |
| D38 | 8-719-940-84 | s | LED LT9101D, RED |
| D39 | 8-719-940-84 | s | LED LT9101D, RED |

(KY-139 BOARD)

| Ref. No. or Q'ty | Part No. | SP | Description |
|---|---|---|---|
| D40 | 8-719-940-84 | s | LED LT9101D, RED |
| IC1 | 8-759-926-56 | s | IC SN74HC273NS |
| IC2 | 8-759-645-17 | s | IC M54517P |
| IC3 | 8-759-926-56 | s | IC SN74HC273NS |
| IC4 | 8-759-645-17 | s | IC M54517P |
| IC5 | 8-759-926-56 | s | IC SN74HC273NS |
| IC6 | 8-759-645-17 | s | IC M54517P |
| IC7 | 8-759-926-56 | s | IC SN74HC273NS |
| IC8 | 8-759-645-17 | s | IC M54517P |
| IC9 | 8-759-926-56 | s | IC SN74HC273NS |
| IC10 | 8-759-645-17 | s | IC M54517P |
| IC11 | 8-759-926-56 | s | IC SN74HC273NS |
| IC12 | 8-759-645-17 | s | IC M54517P |
| IC13 | 8-759-926-56 | s | IC SN74HC273NS |
| IC14 | 8-759-645-17 | s | IC M54517P |
| ND1 | 1-519-415-11 | s | INDICATOR TUBE, FLUORESCENT |
| Q1 | 8-729-238-32 | s | TRANSISTOR 2SC2383-Y |
| R1 | 1-249-414-11 | s | CARBON 560 5% 1/4W |
| R2 | 1-249-414-11 | s | CARBON 560 5% 1/4W |
| R3 | 1-249-414-11 | s | CARBON 560 5% 1/4W |
| R4 | 1-249-414-11 | s | CARBON 560 5% 1/4W |
| R5 | 1-249-414-11 | s | CARBON 560 5% 1/4W |
| R6 | 1-249-414-11 | s | CARBON 560 5% 1/4W |
| R7 | 1-249-414-11 | s | CARBON 560 5% 1/4W |
| R8 | 1-249-414-11 | s | CARBON 560 5% 1/4W |
| R9 | 1-249-414-11 | s | CARBON 560 5% 1/4W |
| R10 | 1-249-414-11 | s | CARBON 560 5% 1/4W |
| R11 | 1-249-414-11 | s | CARBON 560 5% 1/4W |
| R12 | 1-249-414-11 | s | CARBON 560 5% 1/4W |
| R13 | 1-249-414-11 | s | CARBON 560 5% 1/4W |
| R14 | 1-249-414-11 | s | CARBON 560 5% 1/4W |
| R15 | 1-249-414-11 | s | CARBON 560 5% 1/4W |
| R16 | 1-249-414-11 | s | CARBON 560 5% 1/4W |
| R17 | 1-249-414-11 | s | CARBON 560 5% 1/4W |
| R18 | 1-249-414-11 | s | CARBON 560 5% 1/4W |
| R19 | 1-249-414-11 | s | CARBON 560 5% 1/4W |
| R20 | 1-249-414-11 | s | CARBON 560 5% 1/4W |
| R21 | 1-249-414-11 | s | CARBON 560 5% 1/4W |
| R22 | 1-249-411-11 | s | CARBON 330 5% 1/4W |
| R23 | 1-249-411-11 | s | CARBON 330 5% 1/4W |
| R24 | 1-249-408-11 | s | CARBON 180 5% 1/4W |
| R25 | 1-249-408-11 | s | CARBON 180 5% 1/4W |
| R26 | 1-249-412-11 | s | CARBON 390 5% 1/4W |
| R27 | 1-249-412-11 | s | CARBON 390 5% 1/4W |
| R28 | 1-249-414-11 | s | CARBON 560 5% 1/4W |
| R29 | 1-249-414-11 | s | CARBON 560 5% 1/4W |
| R30 | 1-249-414-11 | s | CARBON 560 5% 1/4W |
| R31 | 1-249-414-11 | s | CARBON 560 5% 1/4W |
| R32 | 1-249-414-11 | s | CARBON 560 5% 1/4W |
| R33 | 1-249-414-11 | s | CARBON 560 5% 1/4W |
| R34 | 1-249-408-11 | s | CARBON 180 5% 1/4W |
| R35 | 1-249-408-11 | s | CARBON 180 5% 1/4W |
| R36 | 1-249-411-11 | s | CARBON 330 5% 1/4W |
| R37 | 1-249-411-11 | s | CARBON 330 5% 1/4W |
| R38 | 1-249-411-11 | s | CARBON 330 5% 1/4W |
| R39 | 1-249-417-11 | s | CARBON 1K 5% 1/4W |
| R40 | 1-249-429-11 | s | CARBON 10K 5% 1/4W |

(KY-139 BOARD)

| Ref. No. or Q'ty | Part No. | SP | Description |
|---|---|---|---|
| R41 | 1-249-429-11 | s | CARBON 10K 5% 1/4W |
| R42 | 1-249-429-11 | s | CARBON 10K 5% 1/4W |
| R43 | 1-249-429-11 | s | CARBON 10K 5% 1/4W |
| R44 | 1-249-429-11 | s | CARBON 10K 5% 1/4W |
| R45 | 1-249-429-11 | s | CARBON 10K 5% 1/4W |
| R46 | 1-249-429-11 | s | CARBON 10K 5% 1/4W |
| R47 | 1-249-414-11 | s | CARBON 560 5% 1/4W |
| S1 | 1-554-048-00 | s | SWITCH, PUSH, WITH LED |
| S2 | 1-554-048-00 | s | SWITCH, PUSH, WITH LED |
| S3 | 1-554-048-00 | s | SWITCH, PUSH, WITH LED |
| S4 | 1-554-048-00 | s | SWITCH, PUSH, WITH LED |
| S5 | 1-554-048-00 | s | SWITCH, PUSH, WITH LED |
| S6 | 1-554-048-00 | s | SWITCH, PUSH, WITH LED |
| S7 | 1-554-048-00 | s | SWITCH, PUSH, WITH LED |
| S8 | 1-554-048-00 | s | SWITCH, PUSH, WITH LED |
| S9 | 1-554-048-00 | s | SWITCH, PUSH, WITH LED |
| S10 | 1-554-048-00 | s | SWITCH, PUSH, WITH LED |
| S11 | 1-554-048-00 | s | SWITCH, PUSH, WITH LED |
| S12 | 1-571-280-11 | s | SWITCH, PUSH, WITH LED |
| S13 | 1-571-280-11 | s | SWITCH, PUSH, WITH LED |
| S14 | 1-571-280-11 | s | SWITCH, PUSH, WITH LED |
| S15 | 1-571-280-11 | s | SWITCH, PUSH, WITH LED |
| S16 | 1-554-048-00 | s | SWITCH, PUSH, WITH LED |
| S17 | 1-554-048-00 | s | SWITCH, PUSH, WITH LED |
| S18 | 1-554-048-00 | s | SWITCH, PUSH, WITH LED |
| S19 | 1-554-048-00 | s | SWITCH, PUSH, WITH LED |
| S20 | 1-554-048-00 | s | SWITCH, PUSH, WITH LED |
| S21 | 1-571-280-11 | s | SWITCH, PUSH, WITH LED |
| S22 | 1-554-044-12 | s | SWITCH, PUSH, WITH LED |
| S23 | 1-571-280-11 | s | SWITCH, PUSH, WITH LED |
| S24 | 1-552-412-00 | s | SWITCH, TACTILE |
| S25 | 1-552-412-00 | s | SWITCH, TACTILE |
| S26 | 1-554-045-22 | s | SWITCH, TACTILE, WITH LED |
| S27 | 1-554-039-21 | s | SWITCH, TACTILE, WITH LED |
| S28 | 1-554-040-21 | s | SWITCH, TACTILE, WITH LED |
| S29 | 1-554-041-41 | s | SWITCH, TACTILE, WITH LED |

## LDR-2 BOARD

| Ref. No. or Q'ty | Part No. | SP | Description |
|---|---|---|---|
| 1pc | 1-506-651-11 | s | CONTACT |
| C11 | 1-163-038-00 | s | CERAMIC, CHIP 0.1uF 25V |
| C21 | 1-163-038-00 | s | CERAMIC, CHIP 0.1uF 25V |
| C31 | 1-163-038-00 | s | CERAMIC, CHIP 0.1uF 25V |
| C41 | 1-163-038-00 | s | CERAMIC, CHIP 0.1uF 25V |
| C51 | 1-163-038-00 | s | CERAMIC, CHIP 0.1uF 25V |
| C61 | 1-163-038-00 | s | CERAMIC, CHIP 0.1uF 25V |
| C71 | 1-163-038-00 | s | CERAMIC, CHIP 0.1uF 25V |
| C81 | 1-163-038-00 | s | CERAMIC, CHIP 0.1uF 25V |
| C101 | 1-163-038-00 | s | CERAMIC, CHIP 0.1uF 25V |
| C102 | 1-163-038-00 | s | CERAMIC, CHIP 0.1uF 25V |
| C103 | 1-163-038-00 | s | CERAMIC, CHIP 0.1uF 25V |
| C104 | 1-163-038-00 | s | CERAMIC, CHIP 0.1uF 25V |
| C105 | 1-163-038-00 | s | CERAMIC, CHIP 0.1uF 25V |
| C106 | 1-163-038-00 | s | CERAMIC, CHIP 0.1uF 25V |
| C107 | 1-163-038-00 | s | CERAMIC, CHIP 0.1uF 25V |
| C108 | 1-163-038-00 | s | CERAMIC, CHIP 0.1uF 25V |
| C109 | 1-163-038-00 | s | CERAMIC, CHIP 0.1uF 25V |
| C110 | 1-163-038-00 | s | CERAMIC, CHIP 0.1uF 25V |
| C111 | 1-163-038-00 | s | CERAMIC, CHIP 0.1uF 25V |
| C112 | 1-163-038-00 | s | CERAMIC, CHIP 0.1uF 25V |
| FB101 | 1-543-256-11 | s | BEAD, FERRITE |
| FB102 | 1-543-256-11 | s | BEAD, FERRITE |
| Q11 | 8-729-119-30 | s | TRANSISTOR 2SA1424 |
| Q12 | 8-729-119-30 | s | TRANSISTOR 2SA1424 |
| Q21 | 8-729-119-30 | s | TRANSISTOR 2SA1424 |
| Q22 | 8-729-119-30 | s | TRANSISTOR 2SA1424 |
| Q31 | 8-729-119-30 | s | TRANSISTOR 2SA1424 |
| Q32 | 8-729-119-30 | s | TRANSISTOR 2SA1424 |
| Q41 | 8-729-119-30 | s | TRANSISTOR 2SA1424 |
| Q42 | 8-729-119-30 | s | TRANSISTOR 2SA1424 |
| Q51 | 8-729-119-30 | s | TRANSISTOR 2SA1424 |
| Q52 | 8-729-119-30 | s | TRANSISTOR 2SA1424 |
| Q61 | 8-729-119-30 | s | TRANSISTOR 2SA1424 |
| Q62 | 8-729-119-30 | s | TRANSISTOR 2SA1424 |
| Q71 | 8-729-119-30 | s | TRANSISTOR 2SA1424 |
| Q72 | 8-729-119-30 | s | TRANSISTOR 2SA1424 |
| Q81 | 8-729-119-30 | s | TRANSISTOR 2SA1424 |
| Q82 | 8-729-119-30 | s | TRANSISTOR 2SA1424 |
| R11 | 1-216-617-11 | s | METAL, CHIP 39 0.5% 1/10W |
| R12 | 1-216-615-11 | s | METAL, CHIP 33 0.5% 1/10W |
| R13 | 1-216-617-11 | s | METAL, CHIP 39 0.5% 1/10W |
| R14 | 1-216-615-11 | s | METAL, CHIP 33 0.5% 1/10W |
| R15 | 1-216-647-11 | s | METAL, CHIP 680 0.5% 1/10W |
| R16 | 1-216-647-11 | s | METAL, CHIP 680 0.5% 1/10W |
| R17 | 1-216-627-11 | S | METAL, CHIP 100 0.5% 1/10W |
| R18 | 1-216-619-11 | s | METAL, CHIP 47 0.5% 1/10W |
| R19 | 1-216-619-11 | s | METAL, CHIP 47 0.5% 1/10W |
| R21 | 1-216-617-11 | s | METAL, CHIP 39 0.5% 1/10W |
| R22 | 1-216-615-11 | s | METAL, CHIP 33 0.5% 1/10W |
| R23 | 1-216-617-11 | s | METAL, CHIP 39 0.5% 1/10W |
| R24 | 1-216-615-11 | s | METAL, CHIP 33 0.5% 1/10W |
| R25 | 1-216-647-11 | s | METAL, CHIP 680 0.5% 1/10W |
| R26 | 1-216-647-11 | s | METAL, CHIP 680 0.5% 1/10W |
| R27 | 1-216-627-11 | S | METAL, CHIP 100 0.5% 1/10W |
| R28 | 1-216-619-11 | s | METAL, CHIP 47 0.5% 1/10W |
| R29 | 1-216-619-11 | s | METAL, CHIP 47 0.5% 1/10W |

(LDR-2 BOARD)

| Ref. No. or Q'ty | Part No. | SP | Description |
|---|---|---|---|
| R31 | 1-216-617-11 | s | METAL, CHIP 39 0.5% 1/10W |
| R32 | 1-216-615-11 | s | METAL, CHIP 33 0.5% 1/10W |
| R33 | 1-216-617-11 | s | METAL, CHIP 39 0.5% 1/10W |
| R34 | 1-216-615-11 | s | METAL, CHIP 33 0.5% 1/10W |
| R35 | 1-216-647-11 | s | METAL, CHIP 680 0.5% 1/10W |
| R36 | 1-216-647-11 | s | METAL, CHIP 680 0.5% 1/10W |
| R37 | 1-216-627-11 | s | METAL, CHIP 100 0.5% 1/10W |
| R38 | 1-216-619-11 | s | METAL, CHIP 47 0.5% 1/10W |
| R39 | 1-216-619-11 | s | METAL, CHIP 47 0.5% 1/10W |
| R41 | 1-216-617-11 | s | METAL, CHIP 39 0.5% 1/10W |
| R42 | 1-216-615-11 | s | METAL, CHIP 33 0.5% 1/10W |
| R43 | 1-216-617-11 | s | METAL, CHIP 39 0.5% 1/10W |
| R44 | 1-216-615-11 | s | METAL, CHIP 33 0.5% 1/10W |
| R45 | 1-216-647-11 | s | METAL, CHIP 680 0.5% 1/10W |
| R46 | 1-216-647-11 | s | METAL, CHIP 680 0.5% 1/10W |
| R47 | 1-216-627-11 | s | METAL, CHIP 100 0.5% 1/10W |
| R48 | 1-216-619-11 | s | METAL, CHIP 47 0.5% 1/10W |
| R49 | 1-216-619-11 | s | METAL, CHIP 47 0.5% 1/10W |
| R51 | 1-216-617-11 | s | METAL, CHIP 39 0.5% 1/10W |
| R52 | 1-216-615-11 | s | METAL, CHIP 33 0.5% 1/10W |
| R53 | 1-216-617-11 | s | METAL, CHIP 39 0.5% 1/10W |
| R54 | 1-216-615-11 | s | METAL, CHIP 33 0.5% 1/10W |
| R55 | 1-216-647-11 | s | METAL, CHIP 680 0.5% 1/10W |
| R56 | 1-216-647-11 | s | METAL, CHIP 680 0.5% 1/10W |
| R57 | 1-216-627-11 | s | METAL, CHIP 100 0.5% 1/10W |
| R58 | 1-216-619-11 | s | METAL, CHIP 47 0.5% 1/10W |
| R59 | 1-216-619-11 | s | METAL, CHIP 47 0.5% 1/10W |
| R61 | 1-216-617-11 | s | METAL, CHIP 39 0.5% 1/10W |
| R62 | 1-216-615-11 | s | METAL, CHIP 33 0.5% 1/10W |
| R63 | 1-216-617-11 | s | METAL, CHIP 39 0.5% 1/10W |
| R64 | 1-216-615-11 | s | METAL, CHIP 33 0.5% 1/10W |
| R65 | 1-216-647-11 | s | METAL, CHIP 680 0.5% 1/10W |
| R66 | 1-216-647-11 | s | METAL, CHIP 680 0.5% 1/10W |
| R67 | 1-216-627-11 | s | METAL, CHIP 100 0.5% 1/10W |
| R68 | 1-216-619-11 | s | METAL, CHIP 47 0.5% 1/10W |
| R69 | 1-216-619-11 | s | METAL, CHIP 47 0.5% 1/10W |
| R71 | 1-216-617-11 | s | METAL, CHIP 39 0.5% 1/10W |
| R72 | 1-216-615-11 | s | METAL, CHIP 33 0.5% 1/10W |
| R73 | 1-216-617-11 | s | METAL, CHIP 39 0.5% 1/10W |
| R74 | 1-216-615-11 | s | METAL, CHIP 33 0.5% 1/10W |
| R75 | 1-216-647-11 | s | METAL, CHIP 680 0.5% 1/10W |
| R76 | 1-216-647-11 | s | METAL, CHIP 680 0.5% 1/10W |
| R77 | 1-216-627-11 | s | METAL, CHIP 100 0.5% 1/10W |
| R78 | 1-216-619-11 | s | METAL, CHIP 47 0.5% 1/10W |
| R79 | 1-216-619-11 | s | METAL, CHIP 47 0.5% 1/10W |
| R81 | 1-216-617-11 | s | METAL, CHIP 39 0.5% 1/10W |
| R82 | 1-216-615-11 | s | METAL, CHIP 33 0.5% 1/10W |
| R83 | 1-216-617-11 | s | METAL, CHIP 39 0.5% 1/10W |
| R84 | 1-216-615-11 | s | METAL, CHIP 33 0.5% 1/10W |
| R85 | 1-216-647-11 | s | METAL, CHIP 680 0.5% 1/10W |
| R86 | 1-216-647-11 | s | METAL, CHIP 680 0.5% 1/10W |
| R87 | 1-216-627-11 | s | METAL, CHIP 100 0.5% 1/10W |
| R88 | 1-216-619-11 | s | METAL, CHIP 47 0.5% 1/10W |
| R89 | 1-216-619-11 | s | METAL, CHIP 47 0.5% 1/10W |

## LO-06 BOARD

| Ref. No. or Q'ty | Part No. | SP | Description |
|---|---|---|---|
| 1pc | A-6013-095-A | o | MOUNTED CIRCUIT BOARD, LO-06 |
| 4pcs | 7-622-207-05 | s | N 2.6, TYPE 2 |
| 4pcs | 7-628-254-40 | s | SCREW +PS 2.6X12 |
| 2pcs | 3-576-921-00 | s | SPRING, COMPRESSION |
| 2pcs | 3-714-855-21 | o | SPACER, REAR PANEL |
| 2pcs | 3-845-334-11 | s | SCREW, ORNAMENTAL |
| 2pcs | 7-623-956-41 | s | WASHER 5.0, FIBER |
| 3pcs | 7-682-947-01 | s | SCREW +PSW 3X6 |
| 2pcs | 7-688-004-01 | s | W 4, SMALL |
| 12pcs | 7-621-284-00 | s | SCREW +P 2.6X4 |
| C1 | 1-124-477-11 | s | ELECT 47uF 20% 25V |
| C2 | 1-124-477-11 | s | ELECT 47uF 20% 25V |
| C3 | 1-161-485-00 | s | CERAMIC 0.1uF 50V |
| C4 | 1-161-485-00 | s | CERAMIC 0.1uF 50V |
| C5 | 1-124-477-11 | s | ELECT 47uF 20% 25V |
| C6 | 1-124-477-11 | s | ELECT 47uF 20% 25V |
| C7 | 1-161-485-00 | s | CERAMIC 0.1uF 50V |
| C8 | 1-161-485-00 | s | CERAMIC 0.1uF 50V |
| C9 | 1-161-485-00 | s | CERAMIC 0.1uF 50V |
| C10 | 1-161-485-00 | s | CERAMIC 0.1uF 50V |
| C11 | 1-126-101-11 | s | ELECT 100uF 20% 16V |
| C12 | 1-126-101-11 | s | ELECT 100uF 20% 16V |
| C13 | 1-131-367-00 | s | TANTALUM 22uF 10% 20V |
| C14 | 1-124-510-11 | s | ELECT 220uF 20% 25V |
| C15 | 1-124-510-11 | s | ELECT 220uF 20% 25V |
| C16 | 1-161-485-00 | s | CERAMIC 0.1uF 50V |
| C17 | 1-161-485-00 | s | CERAMIC 0.1uF 50V |
| C18 | 1-124-510-11 | s | ELECT 220uF 20% 25V |
| C19 | 1-124-510-11 | s | ELECT 220uF 20% 25V |
| C20 | 1-161-485-00 | s | CERAMIC 0.1uF 50V |
| C21 | 1-161-485-00 | s | CERAMIC 0.1uF 50V |
| C22 | 1-131-367-00 | s | TANTALUM 22uF 10% 20V |
| C23 | 1-161-485-00 | s | CERAMIC 0.1uF 50V |
| C24 | 1-161-485-00 | s | CERAMIC 0.1uF 50V |
| C25 | 1-126-101-11 | s | ELECT 100uF 20% 16V |
| C26 | 1-126-101-11 | s | ELECT 100uF 20% 16V |
| C27 | 1-131-367-00 | s | TANTALUM 22uF 10% 20V |
| C28 | 1-161-485-00 | s | CERAMIC 0.1uF 50V |
| C29 | 1-161-485-00 | s | CERAMIC 0.1uF 50V |
| C30 | 1-126-101-11 | s | ELECT 100uF 20% 16V |
| C31 | 1-126-101-11 | s | ELECT 100uF 20% 16V |
| C32 | 1-161-485-00 | s | CERAMIC 0.1uF 50V |
| C33 | 1-161-485-00 | s | CERAMIC 0.1uF 50V |
| C34 | 1-131-367-00 | s | TANTALUM 22uF 10% 20V |
| C35 | 1-126-101-11 | s | ELECT 100uF 20% 16V |
| C36 | 1-126-101-11 | s | ELECT 100uF 20% 16V |
| C37 | 1-124-657-00 | s | ELECT, NONPOLAR 10uF 20% 50V |
| C38 | 1-124-657-00 | s | ELECT, NONPOLAR 10uF 20% 50V |
| C39 | 1-124-657-00 | s | ELECT, NONPOLAR 10uF 20% 50V |
| C40 | 1-124-657-00 | s | ELECT, NONPOLAR 10uF 20% 50V |
| C41 | 1-161-890-11 | s | CERAMIC 0.022uF 50V |
| C42 | 1-161-890-11 | s | CERAMIC 0.022uF 50V |
| C43 | 1-161-890-11 | s | CERAMIC 0.022uF 50V |
| C44 | 1-161-890-11 | s | CERAMIC 0.022uF 50V |
| C45 | 1-161-890-11 | s | CERAMIC 0.022uF 50V |
| C46 | 1-161-890-11 | s | CERAMIC 0.022uF 50V |
| CN318 | 1-563-762-11 | o | CONNECTOR, 20P, MALE |
| CN319 | 1-563-455-11 | s | CONNECTOR, 44P, MALE |

| Ref. No. or Q'ty | Part No. | SP | Description |
|---|---|---|---|
| CN601 | 1-568-006-11 | s | CONNECTOR, XLR 3P, FEMALE |
| CN602 | 1-568-006-11 | s | CONNECTOR, XLR 3P, FEMALE |
| CN603 | 1-568-005-11 | s | CONNECTOR, XLR 3P, MALE |
| CN604 | 1-568-005-11 | s | CONNECTOR, XLR 3P, MALE |
| CN605 | 1-568-005-11 | s | CONNECTOR, XLR 3P, MALE |
| CN606 | 1-568-005-11 | s | CONNECTOR, XLR 3P, MALE |
| D1 | 8-719-224-12 | s | DIODE 10YD1.3A |
| D2 | 8-719-224-12 | s | DIODE 10YD1.3A |
| D3 | 8-719-224-12 | s | DIODE 10YD1.3A |
| D4 | 8-719-224-12 | s | DIODE 10YD1.3A |
| D5 | 8-719-224-12 | s | DIODE 10YD1.3A |
| D6 | 8-719-224-12 | s | DIODE 10YD1.3A |
| D7 | 8-719-224-12 | s | DIODE 10YD1.3A |
| D8 | 8-719-224-12 | s | DIODE 10YD1.3A |
| D9 | 8-719-224-12 | s | DIODE 10YD1.3A |
| D10 | 8-719-224-12 | s | DIODE 10YD1.3A |
| D11 | 8-719-224-12 | s | DIODE 10YD1.3A |
| D12 | 8-719-224-12 | s | DIODE 10YD1.3A |
| D13 | 8-719-224-12 | s | DIODE 10YD1.3A |
| D14 | 8-719-224-12 | s | DIODE 10YD1.3A |
| D15 | 8-719-224-12 | s | DIODE 10YD1.3A |
| D16 | 8-719-224-12 | s | DIODE 10YD1.3A |
| IC1 | 8-759-700-40 | s | IC NJM4560S |
| IC2 | 8-759-982-27 | s | IC RC78L15A |
| IC3 | 8-759-982-49 | s | IC RC79L15A |
| IC4 | 8-759-700-40 | s | IC NJM4560S |
| IC5 | 8-759-982-27 | s | IC RC78L15A |
| IC6 | 8-759-982-49 | s | IC RC79L15A |
| IC7 | 8-759-112-10 | s | IC UPC78N15H |
| IC8 | 8-759-141-85 | s | IC UPC79N15H |
| IC9 | 8-759-981-89 | s | IC RC4556S |
| IC10 | 8-759-112-10 | s | IC UPC78N15H |
| IC11 | 8-759-141-85 | s | IC UPC79N15H |
| IC12 | 8-759-981-89 | s | IC RC4556S |
| IC13 | 8-759-981-89 | s | IC RC4556S |
| IC14 | 8-759-112-10 | s | IC UPC78N15H |
| IC15 | 8-759-141-85 | s | IC UPC79N15H |
| IC16 | 8-759-112-10 | s | IC UPC78N15H |
| IC17 | 8-759-141-85 | s | IC UPC79N15H |
| IC18 | 8-759-981-89 | s | IC RC4556S |
| J1 | 1-566-388-11 | s | CONNECTOR, 8P, MALE |
| J2 | 1-566-388-11 | s | CONNECTOR, 8P, MALE |
| J27 | 1-566-388-11 | s | CONNECTOR, 8P, MALE |
| J28 | 1-566-388-11 | s | CONNECTOR, 8P, MALE |
| J29 | 1-566-388-11 | s | CONNECTOR, 8P, MALE |
| J30 | 1-566-388-11 | s | CONNECTOR, 8P, MALE |
| J31 | 1-566-388-11 | s | CONNECTOR, 8P, MALE |
| J32 | 1-566-388-11 | s | CONNECTOR, 8P, MALE |
| JS1 | 1-563-859-11 | s | PLUG, SHORTING |
| JS2 | 1-563-859-11 | s | PLUG, SHORTING |
| JS3 | 1-563-859-11 | s | PLUG, SHORTING |
| JS4 | 1-563-859-11 | s | PLUG, SHORTING |
| L1 | 1-421-459-00 | s | COIL, CHOKE |
| L2 | 1-421-459-00 | s | COIL, CHOKE |
| Q1 | 8-729-203-49 | s | TRANSISTOR 2SC3327-B |
| Q2 | 8-729-203-49 | s | TRANSISTOR 2SC3327-B |

| Ref. No. or Q'ty | Part No. | SP | Description |
|---|---|---|---|
| Q3 | 8-729-203-49 | s | TRANSISTOR 2SC3327-B |
| Q4 | 8-729-203-49 | s | TRANSISTOR 2SC3327-B |
| Q5 | 8-729-620-02 | s | TRANSISTOR 2SA1115-EF |
| Q6 | 8-729-203-49 | s | TRANSISTOR 2SC3327-B |
| Q7 | 8-729-203-49 | s | TRANSISTOR 2SC3327-B |
| Q8 | 8-729-203-49 | s | TRANSISTOR 2SC3327-B |
| Q9 | 8-729-203-49 | s | TRANSISTOR 2SC3327-B |
| Q10 | 8-729-203-49 | s | TRANSISTOR 2SC3327-B |
| Q11 | 8-729-203-49 | s | TRANSISTOR 2SC3327-B |
| Q12 | 8-729-203-49 | s | TRANSISTOR 2SC3327-B |
| Q13 | 8-729-203-49 | s | TRANSISTOR 2SC3327-B |
| Q14 | 8-729-203-49 | s | TRANSISTOR 2SC3327-B |
| Q15 | 8-729-203-49 | s | TRANSISTOR 2SC3327-B |
| Q16 | 8-729-203-49 | s | TRANSISTOR 2SC3327-B |
| Q17 | 8-729-203-49 | s | TRANSISTOR 2SC3327-B |
| R1 | 1-215-467-00 | s | METAL 82K 1% 1/6W |
| R2 | 1-215-474-00 | s | METAL 160K 1% 1/6W |
| R3 | 1-215-467-00 | s | METAL 82K 1% 1/6W |
| R4 | 1-215-430-00 | s | METAL 2.4K 1% 1/6W |
| R5 | 1-215-430-00 | s | METAL 2.4K 1% 1/6W |
| R6 | 1-215-474-00 | s | METAL 160K 1% 1/6W |
| R7 | 1-215-437-00 | s | METAL 4.7K 1% 1/6W |
| R8 | 1-215-437-00 | s | METAL 4.7K 1% 1/6W |
| R9 | 1-215-444-00 | s | METAL 9.1K 1% 1/6W |
| R10 | 1-215-430-00 | s | METAL 2.4K 1% 1/6W |
| R11 | 1-215-430-00 | s | METAL 2.4K 1% 1/6W |
| R12 | 1-215-444-00 | s | METAL 9.1K 1% 1/6W |
| R13 | 1-215-437-00 | s | METAL 4.7K 1% 1/6W |
| R14 | 1-215-446-00 | s | METAL 11K 1% 1/6W |
| R15 | 1-215-448-00 | s | METAL 13K 1% 1/6W |
| R16 | 1-247-735-11 | s | CARBON 47 5% 1/2W |
| R17 | 1-247-735-11 | s | CARBON 47 5% 1/2W |
| R18 | 1-215-437-00 | s | METAL 4.7K 1% 1/6W |
| R19 | 1-215-437-00 | s | METAL 4.7K 1% 1/6W |
| R20 | 1-215-469-00 | s | METAL 100K 1% 1/6W |
| R21 | 1-247-735-11 | s | CARBON 47 5% 1/2W |
| R22 | 1-247-735-11 | s | CARBON 47 5% 1/2W |
| R23 | 1-215-446-00 | s | METAL 11K 1% 1/6W |
| R24 | 1-215-448-00 | s | METAL 13K 1% 1/6W |
| R25 | 1-215-437-00 | s | METAL 4.7K 1% 1/6W |
| R26 | 1-215-430-00 | s | METAL 2.4K 1% 1/6W |
| R27 | 1-215-446-00 | s | METAL 11K 1% 1/6W |
| R28 | 1-215-448-00 | s | METAL 13K 1% 1/6W |
| R29 | 1-247-735-11 | s | CARBON 47 5% 1/2W |
| R30 | 1-247-735-11 | s | CARBON 47 5% 1/2W |
| R31 | 1-215-437-00 | s | METAL 4.7K 1% 1/6W |
| R32 | 1-215-446-00 | s | METAL 11K 1% 1/6W |
| R33 | 1-215-448-00 | s | METAL 13K 1% 1/6W |
| R34 | 1-247-735-11 | s | CARBON 47 5% 1/2W |
| R35 | 1-247-735-11 | s | CARBON 47 5% 1/2W |
| R36 | 1-215-430-00 | s | METAL 2.4K 1% 1/6W |
| R37 | 1-215-430-00 | s | METAL 2.4K 1% 1/6W |
| R38 | 1-215-430-00 | s | METAL 2.4K 1% 1/6W |
| R39 | 1-215-431-00 | s | METAL 2.7K 1% 1/6W |
| R40 | 1-215-385-00 | s | METAL 33 1% 1/6W |
| R41 | 1-215-385-00 | s | METAL 33 1% 1/6W |
| R42 | 1-215-385-00 | s | METAL 33 1% 1/6W |
| R43 | 1-215-385-00 | s | METAL 33 1% 1/6W |
| R44 | 1-215-428-00 | s | METAL 2K 1% 1/6W |

(LO-06 BOARD)

| Ref. No. or Q'ty | Part No. | SP | Description |
|---|---|---|---|
| R45 | 1-215-432-00 | s | METAL 3K 1% 1/6W |
| R46 | 1-215-432-00 | s | METAL 3K 1% 1/6W |
| R47 | 1-215-428-00 | s | METAL 2K 1% 1/6W |
| R48 | 1-215-432-00 | s | METAL 3K 1% 1/6W |
| R49 | 1-215-432-00 | s | METAL 3K 1% 1/6W |
| R50 | 1-215-428-00 | s | METAL 2K 1% 1/6W |
| R51 | 1-215-432-00 | s | METAL 3K 1% 1/6W |
| R52 | 1-215-432-00 | s | METAL 3K 1% 1/6W |
| R53 | 1-215-428-00 | s | METAL 2K 1% 1/6W |
| R54 | 1-215-432-00 | s | METAL 3K 1% 1/6W |
| R55 | 1-215-432-00 | s | METAL 3K 1% 1/6W |
| R56 | 1-215-408-00 | s | METAL 300 1% 1/6W |
| R57 | 1-215-408-00 | s | METAL 300 1% 1/6W |

## MB-199 BOARD

| Ref. No. or Q'ty | Part No. | SP | Description |
|---|---|---|---|
| 48pcs | 7-622-207-05 | s | N 2.6, TYPE 2 |
| 48pcs | 7-628-254-20 | s | SCREW +PS 2.6X8 |
| 2pcs | 7-682-947-01 | s | SCREW +PSW 3X6 |
| C1 | 1-126-132-11 | s | ELECT 1200 20% 16V |
| C2 | 1-126-105-11 | s | ELECT 1000 20% 35V |
| C3 | 1-126-105-11 | s | ELECT 1000 20% 35V |
| C4 | 1-124-534-11 | s | ELECT 680uF 20% 16V |
| C5 | 1-124-534-11 | s | ELECT 680uF 20% 16V |
| C6 | 1-126-131-11 | s | ELECT 1200 20% 6.3V |
| C7 | 1-126-131-11 | s | ELECT 1200 20% 6.3V |
| C8 | 1-126-131-11 | s | ELECT 1200 20% 6.3V |
| CN301 | 1-563-337-11 | s | CONNECTOR, DIN 96P, FEMALE |
| CN302 | 1-563-337-11 | s | CONNECTOR, DIN 96P, FEMALE |
| CN303 | 1-563-337-11 | s | CONNECTOR, DIN 96P, FEMALE |
| CN304 | 1-563-337-11 | s | CONNECTOR, DIN 96P, FEMALE |
| CN305 | 1-563-337-11 | s | CONNECTOR, DIN 96P, FEMALE |
| CN306 | 1-563-337-11 | s | CONNECTOR, DIN 96P, FEMALE |
| CN307 | 1-563-337-11 | s | CONNECTOR, DIN 96P, FEMALE |
| CN308 | 1-563-337-11 | s | CONNECTOR, DIN 96P, FEMALE |
| CN309 | 1-563-337-11 | s | CONNECTOR, DIN 96P, FEMALE |
| CN310 | 1-563-337-11 | s | CONNECTOR, DIN 96P, FEMALE |
| CN311 | 1-563-337-11 | s | CONNECTOR, DIN 96P, FEMALE |
| CN312 | 1-563-337-11 | s | CONNECTOR, DIN 96P, FEMALE |
| CN313 | 1-563-337-11 | s | CONNECTOR, DIN 96P, FEMALE |
| CN314 | 1-563-337-11 | s | CONNECTOR, DIN 96P, FEMALE |
| CN315 | 1-563-337-11 | s | CONNECTOR, DIN 96P, FEMALE |
| CN316 | 1-563-337-11 | s | CONNECTOR, DIN 96P, FEMALE |
| CN317 | 1-563-337-11 | s | CONNECTOR, DIN 96P, FEMALE |
| CN318 | 1-563-765-11 | o | CONNECTOR, DIN 20P, FEMALE |
| CN319 | 1-563-459-11 | s | CONNECTOR, DIN 44P, FEMALE |
| CN320 | 1-563-766-11 | o | CONNECTOR, DIN 30P, FEMALE |
| CN321 | 1-563-459-11 | s | CONNECTOR, DIN 44P, FEMALE |
| CN322 | 1-563-459-11 | s | CONNECTOR, DIN 44P, FEMALE |
| CN323 | 1-563-459-11 | s | CONNECTOR, DIN 44P, FEMALE |
| CN324 | 1-563-766-11 | o | CONNECTOR, DIN 30P, FEMALE |
| CN325 | 1-563-768-11 | o | CONNECTOR, 17P, FEMALE |
| CN326 | 1-560-303-00 | o | CONNECTOR, IL 6P, MALE |
| CN327 | 1-560-300-00 | o | CONNECTOR, IL 3P, MALE |
| CN328 | 1-563-767-11 | o | CONNECTOR, 13P, FEMALE |
| CN329 | 1-563-769-11 | s | CONNECTOR, 8P, FEMALE |
| CN330 | 1-506-637-11 | o | CONNECTOR, PS 16P, MALE |
| CN331 | 1-560-730-00 | o | CONNECTOR, 40P, MALE |
| CN332 | 1-560-728-00 | o | CONNECTOR, 30P, MALE |
| CN333 | 1-560-729-00 | o | CONNECTOR, 34P, MALE |
| CN334 | 1-506-635-11 | o | CONNECTOR, PS 12P MALE |
| CN335 | 1-506-635-11 | o | CONNECTOR, PS 12P MALE |
| CN336 | 1-506-635-11 | o | CONNECTOR, PS 12P MALE |
| CN337 | 1-506-635-11 | o | CONNECTOR, PS 12P MALE |
| CN338 | 1-560-304-00 | o | CONNECTOR, IL 8P, MALE |
| CN339 | 1-568-003-11 | o | CONNECTOR, 5P, MALE |
| CN340 | 1-560-301-00 | o | CONNECTOR, IL 4P, MALE |
| CN11 | 1-526-655-00 | s | SOCKET, IC (DP) 18P |
| CP1 | 1-162-617-11 | s | CERAMIC 0.022 50V |
| IC1 | 8-759-914-41 | s | IC X2212P |
| RB1 | 1-235-359-11 | s | RESISTOR BLOCK 47Kx4 |

## MC-29 BOARD

| Ref. No. or Q'ty | Part No. | SP | Description |
|---|---|---|---|
| 1pc | 1-560-298-00 | o | CONTACT, IL, FEMALE AWG22-28 |
| 1pc | 1-621-129-11 | o | PRINTED CIRCUIT BOARD, MC-29 |
| CN006 | 1-509-988-00 | o | HOUSING, IL 8P |
| PH1 | 8-719-915-46 | s | PHOTOINTERRUPTER GP-1S05 |
| PH2 | 8-719-915-46 | s | PHOTOINTERRUPTER GP-1S05 |

## PC BOARD

| Ref. No. or Q'ty | Part No. | SP | Description |
|---|---|---|---|
| 1pc | 1-560-298-00 | o | CONTACT, IL, FEMALE AWG22-28 |
| 1pc | 1-621-118-11 | o | PRINTED CIRCUIT BOARD, PS-143 |
| CN004 | 1-509-984-00 | o | HOUSING, IL 3P |
| PH1 | 8-719-915-46 | s | PHOTOINTERRUPTER GP-1S05 |

## PRD-1 BOARD

| Ref. No. or Q'ty | Part No. | SP | Description |
|---|---|---|---|
| 1pc | A-6011-130-A | o | MOUNTED CIRCUIT BOARD, PRD-1 |
| 2pcs | 3-714-634-01 | o | LEVER, PC BOARD |
| 2pcs | 3-714-691-01 | o | PIN, SPRING |
| 4pcs | 7-622-207-05 | s | N 2.6, TYPE 2 |
| 4pcs | 7-628-254-40 | s | SCREW +PS 2.6X12 |
| 9pcs | 7-682-948-01 | s | SCREW +PSW 3X8 |
| 2pcs | 7-685-533-19 | s | SCREW +BTP 2.6X6 TYPE2 N-S |
| C1 | 1-161-055-00 | s | CERAMIC 0.022uF 10% 50V |
| C2 | 1-161-055-00 | s | CERAMIC 0.022uF 10% 50V |
| C3 | 1-161-055-00 | s | CERAMIC 0.022uF 10% 50V |
| C4 | 1-161-055-00 | s | CERAMIC 0.022uF 10% 50V |
| C5 | 1-161-055-00 | s | CERAMIC 0.022uF 10% 50V |
| C6 | 1-124-484-11 | s | ELECT 220 20% 35V |
| C7 | 1-124-484-11 | s | ELECT 220 20% 35V |
| C8 | 1-161-055-00 | s | CERAMIC 0.022uF 10% 50V |
| C9 | 1-161-055-00 | s | CERAMIC 0.022uF 10% 50V |
| C10 | 1-124-484-11 | s | ELECT 220 20% 35V |
| C11 | 1-124-484-11 | s | ELECT 220 20% 35V |
| C12 | 1-161-055-00 | s | CERAMIC 0.022uF 10% 50V |
| C13 | 1-161-051-00 | s | CERAMIC 0.01uF 10% 50V |
| C14 | 1-161-051-00 | s | CERAMIC 0.01uF 10% 50V |
| C16 | 1-161-051-00 | s | CERAMIC 0.01uF 10% 50V |
| C17 | 1-161-051-00 | s | CERAMIC 0.01uF 10% 50V |
| C18 | 1-161-051-00 | s | CERAMIC 0.01uF 10% 50V |
| C19 | 1-161-051-00 | s | CERAMIC 0.01uF 10% 50V |
| C20 | 1-161-051-00 | s | CERAMIC 0.01uF 10% 50V |
| C21 | 1-161-051-00 | s | CERAMIC 0.01uF 10% 50V |
| C22 | 1-161-051-00 | s | CERAMIC 0.01uF 10% 50V |
| C23 | 1-161-051-00 | s | CERAMIC 0.01uF 10% 50V |
| C24 | 1-161-051-00 | s | CERAMIC 0.01uF 10% 50V |
| C25 | 1-161-051-00 | s | CERAMIC 0.01uF 10% 50V |
| C26 | 1-161-051-00 | s | CERAMIC 0.01uF 10% 50V |
| C27 | 1-161-051-00 | s | CERAMIC 0.01uF 10% 50V |
| C28 | 1-161-051-00 | s | CERAMIC 0.01uF 10% 50V |
| C29 | 1-161-051-00 | s | CERAMIC 0.01uF 10% 50V |
| C30 | 1-161-051-00 | s | CERAMIC 0.01uF 10% 50V |
| C31 | 1-161-051-00 | s | CERAMIC 0.01uF 10% 50V |
| C32 | 1-161-051-00 | s | CERAMIC 0.01uF 10% 50V |
| C33 | 1-161-051-00 | s | CERAMIC 0.01uF 10% 50V |
| C34 | 1-161-051-00 | s | CERAMIC 0.01uF 10% 50V |
| C35 | 1-161-051-00 | s | CERAMIC 0.01uF 10% 50V |
| C36 | 1-161-051-00 | s | CERAMIC 0.01uF 10% 50V |
| C37 | 1-161-051-00 | s | CERAMIC 0.01uF 10% 50V |
| C38 | 1-161-051-00 | s | CERAMIC 0.01uF 10% 50V |
| C39 | 1-161-051-00 | s | CERAMIC 0.01uF 10% 50V |
| C40 | 1-161-051-00 | s | CERAMIC 0.01uF 10% 50V |
| C41 | 1-161-051-00 | s | CERAMIC 0.01uF 10% 50V |
| C42 | 1-161-051-00 | s | CERAMIC 0.01uF 10% 50V |
| C43 | 1-161-051-00 | s | CERAMIC 0.01uF 10% 50V |
| C44 | 1-161-051-00 | s | CERAMIC 0.01uF 10% 50V |
| C45 | 1-162-765-11 | s | CERAMIC 0.001uF 5% 50V |
| C46 | 1-161-051-00 | s | CERAMIC 0.01uF 10% 50V |
| C47 | 1-161-051-00 | s | CERAMIC 0.01uF 10% 50V |
| C48 | 1-161-051-00 | s | CERAMIC 0.01uF 10% 50V |
| C49 | 1-162-710-11 | s | CERAMIC 100PF 1% 50V |
| C50 | 1-162-814-11 | s | CERAMIC 0.47uF 10% 50V |
| C51 | 1-162-765-11 | s | CERAMIC 0.001uF 5% 50V |
| C52 | 1-161-051-00 | s | CERAMIC 0.01uF 10% 50V |

(PRD-1 BOARD)

| Ref. No. or Q'ty | Part No. | SP | Description |
|---|---|---|---|
| C53 | 1-161-051-00 | s | CERAMIC 0.01uF 10% 50V |
| C54 | 1-161-051-00 | s | CERAMIC 0.01uF 10% 50V |
| C55 | 1-161-051-00 | s | CERAMIC 0.01uF 10% 50V |
| C56 | 1-161-051-00 | s | CERAMIC 0.01uF 10% 50V |
| C57 | 1-161-051-00 | s | CERAMIC 0.01uF 10% 50V |
| C58 | 1-161-051-00 | s | CERAMIC 0.01uF 10% 50V |
| C59 | 1-161-051-00 | s | CERAMIC 0.01uF 10% 50V |
| C101 | 1-161-051-00 | s | CERAMIC 0.01uF 10% 50V |
| C102 | 1-161-051-00 | s | CERAMIC 0.01uF 10% 50V |
| C103 | 1-161-051-00 | s | CERAMIC 0.01uF 10% 50V |
| C104 | 1-126-233-11 | s | ELECT 22uF 20% 50V |
| C105 | 1-162-718-11 | s | CERAMIC 220PF 1% 50V |
| C106 | 1-161-051-00 | s | CERAMIC 0.01uF 10% 50V |
| C107 | 1-161-051-00 | s | CERAMIC 0.01uF 10% 50V |
| C108 | 1-161-051-00 | s | CERAMIC 0.01uF 10% 50V |
| C110 | 1-162-722-11 | s | CERAMIC 330PF 1% 50V |
| C111 | 1-126-233-11 | s | ELECT 22uF 20% 50V |
| C112 | 1-161-051-00 | s | CERAMIC 0.01uF 10% 50V |
| C113 | 1-161-051-00 | s | CERAMIC 0.01uF 10% 50V |
| C114 | 1-161-051-00 | s | CERAMIC 0.01uF 10% 50V |
| C115 | 1-161-051-00 | s | CERAMIC 0.01uF 10% 50V |
| C116 | 1-161-051-00 | s | CERAMIC 0.01uF 10% 50V |
| C117 | 1-161-051-00 | s | CERAMIC 0.01uF 10% 50V |
| C201 | 1-161-051-00 | s | CERAMIC 0.01uF 10% 50V |
| C202 | 1-161-051-00 | s | CERAMIC 0.01uF 10% 50V |
| C203 | 1-161-051-00 | s | CERAMIC 0.01uF 10% 50V |
| C204 | 1-126-233-11 | s | ELECT 22uF 20% 50V |
| C205 | 1-162-718-11 | s | CERAMIC 220PF 1% 50V |
| C206 | 1-161-051-00 | s | CERAMIC 0.01uF 10% 50V |
| C207 | 1-161-051-00 | s | CERAMIC 0.01uF 10% 50V |
| C208 | 1-161-051-00 | s | CERAMIC 0.01uF 10% 50V |
| C210 | 1-162-722-11 | s | CERAMIC 330PF 1% 50V |
| C211 | 1-126-233-11 | s | ELECT 22uF 20% 50V |
| C212 | 1-161-051-00 | s | CERAMIC 0.01uF 10% 50V |
| C213 | 1-161-051-00 | s | CERAMIC 0.01uF 10% 50V |
| C214 | 1-161-051-00 | s | CERAMIC 0.01uF 10% 50V |
| C215 | 1-161-051-00 | s | CERAMIC 0.01uF 10% 50V |
| C216 | 1-161-051-00 | s | CERAMIC 0.01uF 10% 50V |
| C217 | 1-161-051-00 | s | CERAMIC 0.01uF 10% 50V |
| C301 | 1-161-051-00 | s | CERAMIC 0.01uF 10% 50V |
| C302 | 1-161-051-00 | s | CERAMIC 0.01uF 10% 50V |
| C303 | 1-161-051-00 | s | CERAMIC 0.01uF 10% 50V |
| C304 | 1-126-233-11 | s | ELECT 22uF 20% 50V |
| C305 | 1-162-718-11 | s | CERAMIC 220PF 1% 50V |
| C306 | 1-161-051-00 | s | CERAMIC 0.01uF 10% 50V |
| C307 | 1-161-051-00 | s | CERAMIC 0.01uF 10% 50V |
| C308 | 1-161-051-00 | s | CERAMIC 0.01uF 10% 50V |
| C310 | 1-162-722-11 | s | CERAMIC 330PF 1% 50V |
| C311 | 1-126-233-11 | s | ELECT 22uF 20% 50V |
| C312 | 1-161-051-00 | s | CERAMIC 0.01uF 10% 50V |
| C313 | 1-161-051-00 | s | CERAMIC 0.01uF 10% 50V |
| C314 | 1-161-051-00 | s | CERAMIC 0.01uF 10% 50V |
| C315 | 1-161-051-00 | s | CERAMIC 0.01uF 10% 50V |
| C316 | 1-161-051-00 | s | CERAMIC 0.01uF 10% 50V |
| C317 | 1-161-051-00 | s | CERAMIC 0.01uF 10% 50V |
| C401 | 1-161-051-00 | s | CERAMIC 0.01uF 10% 50V |
| C402 | 1-161-051-00 | s | CERAMIC 0.01uF 10% 50V |
| C403 | 1-161-051-00 | s | CERAMIC 0.01uF 10% 50V |
| C404 | 1-126-233-11 | s | ELECT 22uF 20% 50V |
| C405 | 1-162-718-11 | s | CERAMIC 220PF 1% 50V |
| C406 | 1-161-051-00 | s | CERAMIC 0.01uF 10% 50V |
| C407 | 1-161-051-00 | s | CERAMIC 0.01uF 10% 50V |
| C408 | 1-161-051-00 | s | CERAMIC 0.01uF 10% 50V |
| C410 | 1-162-722-11 | s | CERAMIC 330PF 1% 50V |
| C411 | 1-126-233-11 | s | ELECT 22uF 20% 50V |
| C412 | 1-161-051-00 | s | CERAMIC 0.01uF 10% 50V |
| C413 | 1-161-051-00 | s | CERAMIC 0.01uF 10% 50V |
| C414 | 1-161-051-00 | s | CERAMIC 0.01uF 10% 50V |
| C415 | 1-161-051-00 | s | CERAMIC 0.01uF 10% 50V |
| C416 | 1-161-051-00 | s | CERAMIC 0.01uF 10% 50V |
| C417 | 1-161-051-00 | s | CERAMIC 0.01uF 10% 50V |
| C501 | 1-161-051-00 | s | CERAMIC 0.01uF 10% 50V |
| C502 | 1-161-051-00 | s | CERAMIC 0.01uF 10% 50V |
| C503 | 1-161-051-00 | s | CERAMIC 0.01uF 10% 50V |
| C504 | 1-126-233-11 | s | ELECT 22uF 20% 50V |
| C505 | 1-162-718-11 | s | CERAMIC 220PF 1% 50V |
| C506 | 1-161-051-00 | s | CERAMIC 0.01uF 10% 50V |
| C507 | 1-161-051-00 | s | CERAMIC 0.01uF 10% 50V |
| C508 | 1-161-051-00 | s | CERAMIC 0.01uF 10% 50V |
| C510 | 1-162-722-11 | s | CERAMIC 330PF 1% 50V |
| C511 | 1-126-233-11 | s | ELECT 22uF 20% 50V |
| C512 | 1-161-051-00 | s | CERAMIC 0.01uF 10% 50V |
| C513 | 1-161-051-00 | s | CERAMIC 0.01uF 10% 50V |
| C514 | 1-161-051-00 | s | CERAMIC 0.01uF 10% 50V |
| C515 | 1-161-051-00 | s | CERAMIC 0.01uF 10% 50V |
| C516 | 1-161-051-00 | s | CERAMIC 0.01uF 10% 50V |
| C517 | 1-161-051-00 | s | CERAMIC 0.01uF 10% 50V |
| C601 | 1-161-051-00 | s | CERAMIC 0.01uF 10% 50V |
| C602 | 1-161-051-00 | s | CERAMIC 0.01uF 10% 50V |
| C603 | 1-161-051-00 | s | CERAMIC 0.01uF 10% 50V |
| C604 | 1-126-233-11 | s | ELECT 22uF 20% 50V |
| C605 | 1-162-718-11 | s | CERAMIC 220PF 1% 50V |
| C606 | 1-161-051-00 | s | CERAMIC 0.01uF 10% 50V |
| C607 | 1-161-051-00 | s | CERAMIC 0.01uF 10% 50V |
| C608 | 1-161-051-00 | s | CERAMIC 0.01uF 10% 50V |
| C610 | 1-162-722-11 | s | CERAMIC 330PF 1% 50V |
| C611 | 1-126-233-11 | s | ELECT 22uF 20% 50V |
| C612 | 1-161-051-00 | s | CERAMIC 0.01uF 10% 50V |
| C613 | 1-161-051-00 | s | CERAMIC 0.01uF 10% 50V |
| C614 | 1-161-051-00 | s | CERAMIC 0.01uF 10% 50V |
| C615 | 1-161-051-00 | s | CERAMIC 0.01uF 10% 50V |
| C616 | 1-161-051-00 | s | CERAMIC 0.01uF 10% 50V |
| C617 | 1-161-051-00 | s | CERAMIC 0.01uF 10% 50V |
| C701 | 1-161-051-00 | s | CERAMIC 0.01uF 10% 50V |
| C702 | 1-161-051-00 | s | CERAMIC 0.01uF 10% 50V |
| C703 | 1-161-051-00 | s | CERAMIC 0.01uF 10% 50V |
| C704 | 1-126-233-11 | s | ELECT 22uF 20% 50V |
| C705 | 1-162-718-11 | s | CERAMIC 220PF 1% 50V |
| C706 | 1-161-051-00 | s | CERAMIC 0.01uF 10% 50V |
| C707 | 1-161-051-00 | s | CERAMIC 0.01uF 10% 50V |
| C708 | 1-161-051-00 | s | CERAMIC 0.01uF 10% 50V |
| C710 | 1-162-722-11 | s | CERAMIC 330PF 1% 50V |
| C711 | 1-126-233-11 | s | ELECT 22uF 20% 50V |
| C712 | 1-161-051-00 | s | CERAMIC 0.01uF 10% 50V |
| C713 | 1-161-051-00 | s | CERAMIC 0.01uF 10% 50V |
| C714 | 1-161-051-00 | s | CERAMIC 0.01uF 10% 50V |
| C715 | 1-161-051-00 | s | CERAMIC 0.01uF 10% 50V |
| C716 | 1-161-051-00 | s | CERAMIC 0.01uF 10% 50V |

(PRD-1 BOARD)

| Ref. No.<br>or Q'ty | Part No. | SP | Description |
|---|---|---|---|
| C717 | 1-161-051-00 | s | CERAMIC 0.01uF 10% 50V |
| C801 | 1-161-051-00 | s | CERAMIC 0.01uF 10% 50V |
| C802 | 1-161-051-00 | s | CERAMIC 0.01uF 10% 50V |
| C803 | 1-161-051-00 | s | CERAMIC 0.01uF 10% 50V |
| C804 | 1-126-233-11 | s | ELECT 22uF 20% 50V |
| C805 | 1-162-718-11 | s | CERAMIC 220PF 1% 50V |
| C806 | 1-161-051-00 | s | CERAMIC 0.01uF 10% 50V |
| C807 | 1-161-051-00 | s | CERAMIC 0.01uF 10% 50V |
| C808 | 1-161-051-00 | s | CERAMIC 0.01uF 10% 50V |
| C810 | 1-162-722-11 | s | CERAMIC 330PF 1% 50V |
| C811 | 1-126-233-11 | s | ELECT 22uF 20% 50V |
| C812 | 1-161-051-00 | s | CERAMIC 0.01uF 10% 50V |
| C813 | 1-161-051-00 | s | CERAMIC 0.01uF 10% 50V |
| C814 | 1-161-051-00 | s | CERAMIC 0.01uF 10% 50V |
| C815 | 1-161-051-00 | s | CERAMIC 0.01uF 10% 50V |
| C816 | 1-161-051-00 | s | CERAMIC 0.01uF 10% 50V |
| C817 | 1-161-051-00 | s | CERAMIC 0.01uF 10% 50V |
| CN1 | 1-506-748-11 | s | CONNECTOR, DIN 96P, MALE |
| CN2 | 1-506-748-11 | s | CONNECTOR, DIN 96P, MALE |
| D1 | 8-719-800-60 | s | LED TLR214, RED |
| D2 | 8-719-800-60 | s | LED TLR214, RED |
| D3 | 8-719-800-60 | s | LED TLR214, RED |
| D4 | 8-719-800-60 | s | LED TLR214, RED |
| D5 | 8-719-800-60 | s | LED TLR214, RED |
| D6 | 8-719-800-60 | s | LED TLR214, RED |
| D7 | 8-719-800-60 | s | LED TLR214, RED |
| D8 | 8-719-800-60 | s | LED TLR214, RED |
| D9 | 8-719-911-19 | s | DIODE 1SS119 |
| D10 | 8-719-911-19 | s | DIODE 1SS119 |
| IC1 | 8-759-906-07 | s | IC TL607CP |
| IC2 | 8-759-113-12 | s | IC UPC4084C |
| IC3 | 8-759-002-72 | s | IC MC10H116L |
| IC4 | 8-759-917-05 | s | IC SN74HC541N |
| IC5 | 8-759-917-05 | s | IC SN74HC541N |
| IC6 | 8-759-921-08 | s | IC SN74HC02N |
| IC7 | 8-759-938-68 | s | IC CXD1095Q |
| IC8 | 8-759-002-72 | s | IC MC10H116L |
| IC9 | 8-759-301-01 | s | IC HD10101 |
| IC10 | 8-759-002-80 | s | IC MC10H131L |
| IC11 | 8-759-002-71 | s | IC MC10H115L |
| IC12 | 8-759-914-03 | s | IC SN74LS06N |
| IC13 | 8-759-916-14 | s | IC SN74HC04N |
| IC14 | 8-759-002-72 | s | IC MC10H116L |
| IC15 | 8-759-002-80 | s | IC MC10H131L |
| IC16 | 8-759-002-71 | s | IC MC10H115L |
| IC17 | 8-759-301-01 | s | IC HD10101 |
| IC18 | 8-759-002-80 | s | IC MC10H131L |
| IC19 | 8-759-916-12 | s | IC SN74HC00N |
| IC20 | 8-759-916-96 | s | IC SN74HC374N |
| IC21 | 8-759-002-80 | s | IC MC10H131L |
| IC22 | 8-759-916-29 | s | IC SN74HC74N |
| IC23 | 8-759-799-88 | s | IC PALCE22V10-PRD1-01-1 |
| IC24 | 8-759-916-29 | s | IC SN74HC74N |
| IC25 | 8-759-917-38 | s | IC SN74HC4040N |
| IC26 | 8-759-002-72 | s | IC MC10H116L |
| IC27 | 8-759-001-37 | s | IC TC74HC162AP |
| IC28 | 8-759-916-54 | s | IC SN74HC174N |
| IC29 | 8-759-001-37 | s | IC TC74HC162AP |

(PRD-1 BOARD)

| Ref. No.<br>or Q'ty | Part No. | SP | Description |
|---|---|---|---|
| IC30 | 8-759-901-12 | s | IC SN74LS112AN |
| IC31 | 8-759-916-12 | s | IC SN74HC00N |
| IC32 | 8-759-002-72 | s | IC MC10H116L |
| IC33 | 8-759-916-12 | s | IC SN74HC00N |
| IC34 | 8-759-916-55 | s | IC SN74HC175N |
| IC35 | 8-752-306-51 | s | IC CX23065A |
| IC36 | 8-759-916-12 | s | IC SN74HC00N |
| IC37 | 8-759-902-21 | s | IC SN74LS221N |
| IC38 | 8-759-916-12 | s | IC SN74HC00N |
| IC39 | 8-759-914-03 | s | IC SN74LS06N |
| IC40 | 8-759-916-29 | s | IC SN74HC74N |
| JP1 | 1-564-947-21 | o | PIN, SHORTING, 2P |
| JS1 | 1-562-579-21 | s | PLUG, SHORTING |
| L1 | 1-421-370-00 | s | COIL, CHOKE |
| L2 | 1-421-370-00 | s | COIL, CHOKE |
| L3 | 1-421-370-00 | s | COIL, CHOKE |
| L4 | 1-421-370-00 | s | COIL, CHOKE |
| LPF101 | 1-236-315-11 | s | FILTER, LOW-PASS |
| LPF201 | 1-236-315-11 | s | FILTER, LOW-PASS |
| LPF301 | 1-236-315-11 | s | FILTER, LOW-PASS |
| LPF401 | 1-236-315-11 | s | FILTER, LOW-PASS |
| LPF501 | 1-236-315-11 | s | FILTER, LOW-PASS |
| LPF601 | 1-236-315-11 | s | FILTER, LOW-PASS |
| LPF701 | 1-236-315-11 | s | FILTER, LOW-PASS |
| LPF801 | 1-236-315-11 | s | FILTER, LOW-PASS |
| Q1 | 8-729-672-43 | s | TRANSISTOR 2SC2724-D |
| Q2 | 8-729-110-52 | s | TRANSISTOR 2SA1005-L |
| Q3 | 8-729-900-61 | s | TRANSISTOR DTA114ES |
| Q4 | 8-729-900-61 | s | TRANSISTOR DTA114ES |
| Q5 | 8-729-119-78 | s | TRANSISTOR 2SC2785-HFE |
| Q6 | 8-729-900-61 | s | TRANSISTOR DTA114ES |
| Q7 | 8-729-900-61 | s | TRANSISTOR DTA114ES |
| Q8 | 8-729-900-61 | s | TRANSISTOR DTA114ES |
| Q9 | 8-729-900-61 | s | TRANSISTOR DTA114ES |
| Q10 | 8-729-900-61 | s | TRANSISTOR DTA114ES |
| Q11 | 8-729-900-61 | s | TRANSISTOR DTA114ES |
| Q12 | 8-729-900-61 | s | TRANSISTOR DTA114ES |
| Q13 | 8-729-900-61 | s | TRANSISTOR DTA114ES |
| Q101 | 8-729-123-69 | s | TRANSISTOR 2SC2369 |
| Q102 | 8-729-123-69 | s | TRANSISTOR 2SC2369 |
| Q103 | 8-729-123-69 | s | TRANSISTOR 2SC2369 |
| Q104 | 8-729-123-69 | s | TRANSISTOR 2SC2369 |
| Q105 | 8-729-123-69 | s | TRANSISTOR 2SC2369 |
| Q106 | 8-729-123-69 | s | TRANSISTOR 2SC2369 |
| Q107 | 8-729-123-69 | s | TRANSISTOR 2SC2369 |
| Q108 | 8-729-123-69 | s | TRANSISTOR 2SC2369 |
| Q109 | 8-729-123-69 | s | TRANSISTOR 2SC2369 |
| Q110 | 8-729-123-69 | s | TRANSISTOR 2SC2369 |
| Q111 | 8-729-123-69 | s | TRANSISTOR 2SC2369 |
| Q112 | 8-729-820-99 | s | TRANSISTOR 2SC4071 |
| Q113 | 8-729-123-69 | s | TRANSISTOR 2SC2369 |
| Q114 | 8-729-123-69 | s | TRANSISTOR 2SC2369 |
| Q201 | 8-729-123-69 | s | TRANSISTOR 2SC2369 |
| Q202 | 8-729-123-69 | s | TRANSISTOR 2SC2369 |
| Q203 | 8-729-123-69 | s | TRANSISTOR 2SC2369 |
| Q204 | 8-729-123-69 | s | TRANSISTOR 2SC2369 |

(PRD-1 BOARD)

| Ref. No. or Q'ty | Part No. | SP | Description |
|---|---|---|---|
| Q205 | 8-729-123-69 | s | TRANSISTOR 2SC2369 |
| Q206 | 8-729-123-69 | s | TRANSISTOR 2SC2369 |
| Q207 | 8-729-123-69 | s | TRANSISTOR 2SC2369 |
| Q208 | 8-729-123-69 | s | TRANSISTOR 2SC2369 |
| Q209 | 8-729-123-69 | s | TRANSISTOR 2SC2369 |
| Q210 | 8-729-123-69 | s | TRANSISTOR 2SC2369 |
| Q211 | 8-729-123-69 | s | TRANSISTOR 2SC2369 |
| Q212 | 8-729-820-99 | s | TRANSISTOR 2SC4071 |
| Q213 | 8-729-123-69 | s | TRANSISTOR 2SC2369 |
| Q214 | 8-729-123-69 | s | TRANSISTOR 2SC2369 |
| Q301 | 8-729-123-69 | s | TRANSISTOR 2SC2369 |
| Q302 | 8-729-123-69 | s | TRANSISTOR 2SC2369 |
| Q303 | 8-729-123-69 | s | TRANSISTOR 2SC2369 |
| Q304 | 8-729-123-69 | s | TRANSISTOR 2SC2369 |
| Q305 | 8-729-123-69 | s | TRANSISTOR 2SC2369 |
| Q306 | 8-729-123-69 | s | TRANSISTOR 2SC2369 |
| Q307 | 8-729-123-69 | s | TRANSISTOR 2SC2369 |
| Q308 | 8-729-123-69 | s | TRANSISTOR 2SC2369 |
| Q309 | 8-729-123-69 | s | TRANSISTOR 2SC2369 |
| Q310 | 8-729-123-69 | s | TRANSISTOR 2SC2369 |
| Q311 | 8-729-123-69 | s | TRANSISTOR 2SC2369 |
| Q312 | 8-729-820-99 | s | TRANSISTOR 2SC4071 |
| Q313 | 8-729-123-69 | s | TRANSISTOR 2SC2369 |
| Q314 | 8-729-123-69 | s | TRANSISTOR 2SC2369 |
| Q401 | 8-729-123-69 | s | TRANSISTOR 2SC2369 |
| Q402 | 8-729-123-69 | s | TRANSISTOR 2SC2369 |
| Q403 | 8-729-123-69 | s | TRANSISTOR 2SC2369 |
| Q404 | 8-729-123-69 | s | TRANSISTOR 2SC2369 |
| Q405 | 8-729-123-69 | s | TRANSISTOR 2SC2369 |
| Q406 | 8-729-123-69 | s | TRANSISTOR 2SC2369 |
| Q407 | 8-729-123-69 | s | TRANSISTOR 2SC2369 |
| Q408 | 8-729-123-69 | s | TRANSISTOR 2SC2369 |
| Q409 | 8-729-123-69 | s | TRANSISTOR 2SC2369 |
| Q410 | 8-729-123-69 | s | TRANSISTOR 2SC2369 |
| Q411 | 8-729-123-69 | s | TRANSISTOR 2SC2369 |
| Q412 | 8-729-820-99 | s | TRANSISTOR 2SC4071 |
| Q413 | 8-729-123-69 | s | TRANSISTOR 2SC2369 |
| Q414 | 8-729-123-69 | s | TRANSISTOR 2SC2369 |
| Q501 | 8-729-123-69 | s | TRANSISTOR 2SC2369 |
| Q502 | 8-729-123-69 | s | TRANSISTOR 2SC2369 |
| Q503 | 8-729-123-69 | s | TRANSISTOR 2SC2369 |
| Q504 | 8-729-123-69 | s | TRANSISTOR 2SC2369 |
| Q505 | 8-729-123-69 | s | TRANSISTOR 2SC2369 |
| Q506 | 8-729-123-69 | s | TRANSISTOR 2SC2369 |
| Q507 | 8-729-123-69 | s | TRANSISTOR 2SC2369 |
| Q508 | 8-729-123-69 | s | TRANSISTOR 2SC2369 |
| Q509 | 8-729-123-69 | s | TRANSISTOR 2SC2369 |
| Q510 | 8-729-123-69 | s | TRANSISTOR 2SC2369 |
| Q511 | 8-729-123-69 | s | TRANSISTOR 2SC2369 |
| Q512 | 8-729-820-99 | s | TRANSISTOR 2SC4071 |
| Q513 | 8-729-123-69 | s | TRANSISTOR 2SC2369 |
| Q514 | 8-729-123-69 | s | TRANSISTOR 2SC2369 |
| Q601 | 8-729-123-69 | s | TRANSISTOR 2SC2369 |
| Q602 | 8-729-123-69 | s | TRANSISTOR 2SC2369 |
| Q603 | 8-729-123-69 | s | TRANSISTOR 2SC2369 |
| Q604 | 8-729-123-69 | s | TRANSISTOR 2SC2369 |
| Q605 | 8-729-123-69 | s | TRANSISTOR 2SC2369 |
| Q606 | 8-729-123-69 | s | TRANSISTOR 2SC2369 |
| Q607 | 8-729-123-69 | s | TRANSISTOR 2SC2369 |

(PRD-1 BOARD)

| Ref. No. or Q'ty | Part No. | SP | Description |
|---|---|---|---|
| Q608 | 8-729-123-69 | s | TRANSISTOR 2SC2369 |
| Q609 | 8-729-123-69 | s | TRANSISTOR 2SC2369 |
| Q610 | 8-729-123-69 | s | TRANSISTOR 2SC2369 |
| Q611 | 8-729-123-69 | s | TRANSISTOR 2SC2369 |
| Q612 | 8-729-820-99 | s | TRANSISTOR 2SC4071 |
| Q613 | 8-729-123-69 | s | TRANSISTOR 2SC2369 |
| Q614 | 8-729-123-69 | s | TRANSISTOR 2SC2369 |
| Q701 | 8-729-123-69 | s | TRANSISTOR 2SC2369 |
| Q702 | 8-729-123-69 | s | TRANSISTOR 2SC2369 |
| Q703 | 8-729-123-69 | s | TRANSISTOR 2SC2369 |
| Q704 | 8-729-123-69 | s | TRANSISTOR 2SC2369 |
| Q705 | 8-729-123-69 | s | TRANSISTOR 2SC2369 |
| Q706 | 8-729-123-69 | s | TRANSISTOR 2SC2369 |
| Q707 | 8-729-123-69 | s | TRANSISTOR 2SC2369 |
| Q708 | 8-729-123-69 | s | TRANSISTOR 2SC2369 |
| Q709 | 8-729-123-69 | s | TRANSISTOR 2SC2369 |
| Q710 | 8-729-123-69 | s | TRANSISTOR 2SC2369 |
| Q711 | 8-729-123-69 | s | TRANSISTOR 2SC2369 |
| Q712 | 8-729-820-99 | s | TRANSISTOR 2SC4071 |
| Q713 | 8-729-123-69 | s | TRANSISTOR 2SC2369 |
| Q714 | 8-729-123-69 | s | TRANSISTOR 2SC2369 |
| Q801 | 8-729-123-69 | s | TRANSISTOR 2SC2369 |
| Q802 | 8-729-123-69 | s | TRANSISTOR 2SC2369 |
| Q803 | 8-729-123-69 | s | TRANSISTOR 2SC2369 |
| Q804 | 8-729-123-69 | s | TRANSISTOR 2SC2369 |
| Q805 | 8-729-123-69 | s | TRANSISTOR 2SC2369 |
| Q806 | 8-729-123-69 | s | TRANSISTOR 2SC2369 |
| Q807 | 8-729-123-69 | s | TRANSISTOR 2SC2369 |
| Q808 | 8-729-123-69 | s | TRANSISTOR 2SC2369 |
| Q809 | 8-729-123-69 | s | TRANSISTOR 2SC2369 |
| Q810 | 8-729-123-69 | s | TRANSISTOR 2SC2369 |
| Q811 | 8-729-123-69 | s | TRANSISTOR 2SC2369 |
| Q812 | 8-729-820-99 | s | TRANSISTOR 2SC4071 |
| Q813 | 8-729-123-69 | s | TRANSISTOR 2SC2369 |
| Q814 | 8-729-123-69 | s | TRANSISTOR 2SC2369 |
| R1 | 1-215-373-31 | s | METAL 10 1% 1/6W |
| R3 | 1-215-397-00 | s | METAL 100 1% 1/6W |
| R4 | 1-215-397-00 | s | METAL 100 1% 1/6W |
| R5 | 1-215-389-00 | s | METAL 47 1% 1/6W |
| R6 | 1-215-389-00 | s | METAL 47 1% 1/6W |
| R7 | 1-215-421-00 | s | METAL 1K 1% 1/6W |
| R8 | 1-215-421-00 | s | METAL 1K 1% 1/6W |
| R9 | 1-215-421-00 | s | METAL 1K 1% 1/6W |
| R10 | 1-215-421-00 | s | METAL 1K 1% 1/6W |
| R11 | 1-215-417-00 | s | METAL 680 1% 1/6W |
| R12 | 1-215-445-00 | s | METAL 10K 1% 1/6W |
| R13 | 1-215-421-00 | s | METAL 1K 1% 1/6W |
| R14 | 1-215-429-00 | s | METAL 2.2K 1% 1/6W |
| R15 | 1-215-429-00 | s | METAL 2.2K 1% 1/6W |
| R16 | 1-215-393-00 | s | METAL 68 1% 1/6W |
| R17 | 1-215-393-00 | s | METAL 68 1% 1/6W |
| R18 | 1-215-445-00 | s | METAL 10K 1% 1/6W |
| R19 | 1-215-445-00 | s | METAL 10K 1% 1/6W |
| R20 | 1-215-437-00 | s | METAL 4.7K 1% 1/6W |
| R21 | 1-215-437-00 | s | METAL 4.7K 1% 1/6W |
| R22 | 1-215-389-00 | s | METAL 47 1% 1/6W |
| R23 | 1-215-389-00 | s | METAL 47 1% 1/6W |
| R24 | 1-215-389-00 | s | METAL 47 1% 1/6W |
| R25 | 1-215-389-00 | s | METAL 47 1% 1/6W |

(PRD-1 BOARD)

| Ref. No. or Q'ty | Part No. | SP | Description |
|---|---|---|---|
| R26 | 1-215-389-00 | s | METAL 47 1% 1/6W |
| R27 | 1-215-389-00 | s | METAL 47 1% 1/6W |
| R28 | 1-215-389-00 | s | METAL 47 1% 1/6W |
| R29 | 1-215-389-00 | s | METAL 47 1% 1/6W |
| R30 | 1-215-393-00 | s | METAL 68 1% 1/6W |
| R31 | 1-215-393-00 | s | METAL 68 1% 1/6W |
| R32 | 1-215-393-00 | s | METAL 68 1% 1/6W |
| R33 | 1-215-393-00 | s | METAL 68 1% 1/6W |
| R34 | 1-215-393-00 | s | METAL 68 1% 1/6W |
| R35 | 1-215-393-00 | s | METAL 68 1% 1/6W |
| R36 | 1-215-393-00 | s | METAL 68 1% 1/6W |
| R37 | 1-215-393-00 | s | METAL 68 1% 1/6W |
| R38 | 1-215-393-00 | s | METAL 68 1% 1/6W |
| R39 | 1-215-393-00 | s | METAL 68 1% 1/6W |
| R40 | 1-215-393-00 | s | METAL 68 1% 1/6W |
| R41 | 1-215-393-00 | s | METAL 68 1% 1/6W |
| R42 | 1-215-393-00 | s | METAL 68 1% 1/6W |
| R43 | 1-215-393-00 | s | METAL 68 1% 1/6W |
| R44 | 1-215-393-00 | s | METAL 68 1% 1/6W |
| R45 | 1-215-393-00 | s | METAL 68 1% 1/6W |
| R46 | 1-215-421-00 | s | METAL 1K 1% 1/6W |
| R47 | 1-215-433-00 | s | METAL 3.3K 1% 1/6W |
| R48 | 1-215-433-00 | s | METAL 3.3K 1% 1/6W |
| R49 | 1-215-433-00 | s | METAL 3.3K 1% 1/6W |
| R50 | 1-215-421-00 | s | METAL 1K 1% 1/6W |
| R51 | 1-215-433-00 | s | METAL 3.3K 1% 1/6W |
| R52 | 1-215-421-00 | s | METAL 1K 1% 1/6W |
| R53 | 1-215-445-00 | s | METAL 10K 1% 1/6W |
| R54 | 1-215-445-00 | s | METAL 10K 1% 1/6W |
| R55 | 1-215-397-00 | s | METAL 100 1% 1/6W |
| R56 | 1-215-401-11 | s | METAL 150 1% 1/6W |
| R57 | 1-215-445-00 | s | METAL 10K 1% 1/6W |
| R58 | 1-215-421-00 | s | METAL 1K 1% 1/6W |
| R59 | 1-215-485-00 | s | METAL 470K 1% 1/6W |
| R60 | 1-215-493-00 | s | METAL 1M 1% 1/6W |
| R61 | 1-215-428-00 | s | METAL 2K 1% 1/6W |
| R62 | 1-215-431-00 | s | METAL 2.7K 1% 1/6W |
| R63 | 1-215-455-00 | s | METAL 27K 1% 1/6W |
| R64 | 1-215-445-00 | s | METAL 10K 1% 1/6W |
| R65 | 1-215-397-00 | s | METAL 100 1% 1/6W |
| R66 | 1-215-405-00 | s | METAL 220 1% 1/6W |
| R67 | 1-215-405-00 | s | METAL 220 1% 1/6W |
| R68 | 1-215-405-00 | s | METAL 220 1% 1/6W |
| R69 | 1-215-405-00 | s | METAL 220 1% 1/6W |
| R70 | 1-215-405-00 | s | METAL 220 1% 1/6W |
| R71 | 1-215-405-00 | s | METAL 220 1% 1/6W |
| R72 | 1-215-405-00 | s | METAL 220 1% 1/6W |
| R73 | 1-215-405-00 | s | METAL 220 1% 1/6W |
| R74 | 1-215-441-00 | s | METAL 6.8K 1% 1/6W |
| R75 | 1-215-429-00 | s | METAL 2.2K 1% 1/6W |
| R76 | 1-215-421-00 | s | METAL 1K 1% 1/6W |
| R77 | 1-215-445-00 | s | METAL 10K 1% 1/6W |
| R78 | 1-215-445-00 | s | METAL 10K 1% 1/6W |
| R79 | 1-215-445-00 | s | METAL 10K 1% 1/6W |
| R80 | 1-215-445-00 | s | METAL 10K 1% 1/6W |
| R82 | 1-215-397-00 | s | METAL 100 1% 1/6W |
| R83 | 1-215-401-11 | s | METAL 150 1% 1/6W |
| R101 | 1-214-543-00 | s | METAL 270 1% 1/8W |
| R102 | 1-214-523-00 | s | METAL 39 1% 1/8W |

(PRD-1 BOARD)

| Ref. No. or Q'ty | Part No. | SP | Description |
|---|---|---|---|
| R103 | 1-214-523-00 | s | METAL 39 1% 1/8W |
| R104 | 1-214-543-00 | s | METAL 270 1% 1/8W |
| R105 | 1-214-559-00 | s | METAL 1.2K 1% 1/8W |
| R106 | 1-214-561-00 | s | METAL 1.5k 1% 1/8W |
| R107 | 1-214-541-00 | s | METAL 220 1% 1/8W |
| R108 | 1-214-541-00 | s | METAL 220 1% 1/8W |
| R109 | 1-214-533-00 | s | METAL 100 1% 1/8W |
| R110 | 1-214-525-00 | s | METAL 47 1% 1/8W |
| R111 | 1-214-533-00 | s | METAL 100 1% 1/8W |
| R112 | 1-214-521-00 | s | METAL 33 1% 1/8W |
| R113 | 1-214-521-00 | s | METAL 33 1% 1/8W |
| R114 | 1-214-533-00 | s | METAL 100 1% 1/8W |
| R115 | 1-214-525-00 | s | METAL 47 1% 1/8W |
| R116 | 1-214-533-00 | s | METAL 100 1% 1/8W |
| R117 | 1-214-525-00 | s | METAL 47 1% 1/8W |
| R118 | 1-214-525-00 | s | METAL 47 1% 1/8W |
| R119 | 1-214-559-00 | s | METAL 1.2K 1% 1/8W |
| R120 | 1-214-559-00 | s | METAL 1.2K 1% 1/8W |
| R121 | 1-214-525-00 | s | METAL 47 1% 1/8W |
| R122 | 1-214-525-00 | s | METAL 47 1% 1/8W |
| R123 | 1-214-525-00 | s | METAL 47 1% 1/8W |
| R124 | 1-214-525-00 | s | METAL 47 1% 1/8W |
| R125 | 1-214-533-00 | s | METAL 100 1% 1/8W |
| R126 | 1-214-553-00 | s | METAL 680 1% 1/8W |
| R127 | 1-214-553-00 | s | METAL 680 1% 1/8W |
| R128 | 1-214-533-00 | s | METAL 100 1% 1/8W |
| R129 | 1-214-533-00 | s | METAL 100 1% 1/8W |
| R130 | 1-214-525-00 | s | METAL 47 1% 1/8W |
| R131 | 1-214-513-00 | s | METAL 15 1% 1/8W |
| R132 | 1-214-513-00 | s | METAL 15 1% 1/8W |
| R133 | 1-214-525-00 | s | METAL 47 1% 1/8W |
| R134 | 1-214-561-00 | s | METAL 1.5k 1% 1/8W |
| R135 | 1-214-549-00 | s | METAL 470 1% 1/8W |
| R136 | 1-214-525-00 | s | METAL 47 1% 1/8W |
| R137 | 1-214-549-00 | s | METAL 470 1% 1/8W |
| R138 | 1-214-561-00 | s | METAL 1.5k 1% 1/8W |
| R140 | 1-214-525-00 | s | METAL 47 1% 1/8W |
| R141 | 1-214-529-00 | s | METAL 68 1% 1/8W |
| R142 | 1-214-525-00 | s | METAL 47 1% 1/8W |
| R143 | 1-214-525-00 | s | METAL 47 1% 1/8W |
| R144 | 1-214-529-00 | s | METAL 68 1% 1/8W |
| R145 | 1-214-525-00 | s | METAL 47 1% 1/8W |
| R146 | 1-215-389-00 | s | METAL 47 1% 1/6W |
| R147 | 1-214-533-00 | s | METAL 100 1% 1/8W |
| R148 | 1-214-557-00 | s | METAL 1K 1% 1/8W |
| R149 | 1-214-553-00 | s | METAL 680 1% 1/8W |
| R150 | 1-214-545-00 | s | METAL 330 1% 1/8W |
| R151 | 1-214-533-00 | s | METAL 100 1% 1/8W |
| R152 | 1-214-545-00 | s | METAL 330 1% 1/8W |
| R153 | 1-214-535-00 | s | METAL 120 1% 1/8W |
| R154 | 1-214-535-00 | s | METAL 120 1% 1/8W |
| R155 | 1-214-545-00 | s | METAL 330 1% 1/8W |
| R156 | 1-214-527-00 | s | METAL 56 1% 1/8W |
| R201 | 1-214-543-00 | s | METAL 270 1% 1/8W |
| R202 | 1-214-523-00 | s | METAL 39 1% 1/8W |
| R203 | 1-214-523-00 | s | METAL 39 1% 1/8W |
| R204 | 1-214-543-00 | s | METAL 270 1% 1/8W |
| R205 | 1-214-559-00 | s | METAL 1.2K 1% 1/8W |
| R206 | 1-214-561-00 | s | METAL 1.5k 1% 1/8W |

(PRD-1 BOARD)

| Ref. No. or Q'ty | Part No. | SP | Description |
|---|---|---|---|
| R207 | 1-214-541-00 | s | METAL 220 1% 1/8W |
| R208 | 1-214-541-00 | s | METAL 220 1% 1/8W |
| R209 | 1-214-533-00 | s | METAL 100 1% 1/8W |
| R210 | 1-214-525-00 | s | METAL 47 1% 1/8W |
| R211 | 1-214-533-00 | s | METAL 100 1% 1/8W |
| R212 | 1-214-521-00 | s | METAL 33 1% 1/8W |
| R213 | 1-214-521-00 | s | METAL 33 1% 1/8W |
| R214 | 1-214-533-00 | s | METAL 100 1% 1/8W |
| R215 | 1-214-525-00 | s | METAL 47 1% 1/8W |
| R216 | 1-214-533-00 | s | METAL 100 1% 1/8W |
| R217 | 1-214-525-00 | s | METAL 47 1% 1/8W |
| R218 | 1-214-525-00 | s | METAL 47 1% 1/8W |
| R219 | 1-214-559-00 | s | METAL 1.2K 1% 1/8W |
| R220 | 1-214-559-00 | s | METAL 1.2K 1% 1/8W |
| R221 | 1-214-525-00 | s | METAL 47 1% 1/8W |
| R222 | 1-214-525-00 | s | METAL 47 1% 1/8W |
| R223 | 1-214-525-00 | s | METAL 47 1% 1/8W |
| R224 | 1-214-525-00 | s | METAL 47 1% 1/8W |
| R225 | 1-214-533-00 | s | METAL 100 1% 1/8W |
| R226 | 1-214-553-00 | s | METAL 680 1% 1/8W |
| R227 | 1-214-553-00 | s | METAL 680 1% 1/8W |
| R228 | 1-214-533-00 | s | METAL 100 1% 1/8W |
| R229 | 1-214-533-00 | s | METAL 100 1% 1/8W |
| R230 | 1-214-525-00 | s | METAL 47 1% 1/8W |
| R231 | 1-214-513-00 | s | METAL 15 1% 1/8W |
| R232 | 1-214-513-00 | s | METAL 15 1% 1/8W |
| R233 | 1-214-525-00 | s | METAL 47 1% 1/8W |
| R234 | 1-214-561-00 | s | METAL 1.5k 1% 1/8W |
| R235 | 1-214-549-00 | s | METAL 470 1% 1/8W |
| R236 | 1-214-525-00 | s | METAL 47 1% 1/8W |
| R237 | 1-214-549-00 | s | METAL 470 1% 1/8W |
| R238 | 1-214-561-00 | s | METAL 1.5k 1% 1/8W |
| R240 | 1-214-525-00 | s | METAL 47 1% 1/8W |
| R241 | 1-214-529-00 | s | METAL 68 1% 1/8W |
| R242 | 1-214-525-00 | s | METAL 47 1% 1/8W |
| R243 | 1-214-525-00 | s | METAL 47 1% 1/8W |
| R244 | 1-214-529-00 | s | METAL 68 1% 1/8W |
| R245 | 1-214-525-00 | s | METAL 47 1% 1/8W |
| R246 | 1-215-389-00 | s | METAL 47 1% 1/6W |
| R247 | 1-214-533-00 | s | METAL 100 1% 1/8W |
| R248 | 1-214-557-00 | s | METAL 1K 1% 1/8W |
| R249 | 1-214-553-00 | s | METAL 680 1% 1/8W |
| R250 | 1-214-545-00 | s | METAL 330 1% 1/8W |
| R251 | 1-214-533-00 | s | METAL 100 1% 1/8W |
| R252 | 1-214-545-00 | s | METAL 330 1% 1/8W |
| R253 | 1-214-535-00 | s | METAL 120 1% 1/8W |
| R254 | 1-214-535-00 | s | METAL 120 1% 1/8W |
| R255 | 1-214-545-00 | s | METAL 330 1% 1/8W |
| R256 | 1-214-527-00 | s | METAL 56 1% 1/8W |
| R301 | 1-214-543-00 | s | METAL 270 1% 1/8W |
| R302 | 1-214-523-00 | s | METAL 39 1% 1/8W |
| R303 | 1-214-523-00 | s | METAL 39 1% 1/8W |
| R304 | 1-214-543-00 | s | METAL 270 1% 1/8W |
| R305 | 1-214-559-00 | s | METAL 1.2K 1% 1/8W |
| R306 | 1-214-561-00 | s | METAL 1.5k 1% 1/8W |
| R307 | 1-214-541-00 | s | METAL 220 1% 1/8W |
| R308 | 1-214-541-00 | s | METAL 220 1% 1/8W |
| R309 | 1-214-533-00 | s | METAL 100 1% 1/8W |
| R310 | 1-214-525-00 | s | METAL 47 1% 1/8W |
| R311 | 1-214-533-00 | s | METAL 100 1% 1/8W |
| R312 | 1-214-521-00 | s | METAL 33 1% 1/8W |
| R313 | 1-214-521-00 | s | METAL 33 1% 1/8W |
| R314 | 1-214-533-00 | s | METAL 100 1% 1/8W |
| R315 | 1-214-525-00 | s | METAL 47 1% 1/8W |
| R316 | 1-214-533-00 | s | METAL 100 1% 1/8W |
| R317 | 1-214-525-00 | s | METAL 47 1% 1/8W |
| R318 | 1-214-525-00 | s | METAL 47 1% 1/8W |
| R319 | 1-214-559-00 | s | METAL 1.2K 1% 1/8W |
| R320 | 1-214-559-00 | s | METAL 1.2K 1% 1/8W |
| R321 | 1-214-525-00 | s | METAL 47 1% 1/8W |
| R322 | 1-214-525-00 | s | METAL 47 1% 1/8W |
| R323 | 1-214-525-00 | s | METAL 47 1% 1/8W |
| R324 | 1-214-525-00 | s | METAL 47 1% 1/8W |
| R325 | 1-214-533-00 | s | METAL 100 1% 1/8W |
| R326 | 1-214-553-00 | s | METAL 680 1% 1/8W |
| R327 | 1-214-553-00 | s | METAL 680 1% 1/8W |
| R328 | 1-214-533-00 | s | METAL 100 1% 1/8W |
| R329 | 1-214-533-00 | s | METAL 100 1% 1/8W |
| R330 | 1-214-525-00 | s | METAL 47 1% 1/8W |
| R331 | 1-214-513-00 | s | METAL 15 1% 1/8W |
| R332 | 1-214-513-00 | s | METAL 15 1% 1/8W |
| R333 | 1-214-525-00 | s | METAL 47 1% 1/8W |
| R334 | 1-214-561-00 | s | METAL 1.5k 1% 1/8W |
| R335 | 1-214-549-00 | s | METAL 470 1% 1/8W |
| R336 | 1-214-525-00 | s | METAL 47 1% 1/8W |
| R337 | 1-214-549-00 | s | METAL 470 1% 1/8W |
| R338 | 1-214-561-00 | s | METAL 1.5k 1% 1/8W |
| R340 | 1-214-525-00 | s | METAL 47 1% 1/8W |
| R341 | 1-214-529-00 | s | METAL 68 1% 1/8W |
| R342 | 1-214-525-00 | s | METAL 47 1% 1/8W |
| R343 | 1-214-525-00 | s | METAL 47 1% 1/8W |
| R344 | 1-214-529-00 | s | METAL 68 1% 1/8W |
| R345 | 1-214-525-00 | s | METAL 47 1% 1/8W |
| R346 | 1-215-389-00 | s | METAL 47 1% 1/6W |
| R347 | 1-214-533-00 | s | METAL 100 1% 1/8W |
| R348 | 1-214-557-00 | s | METAL 1K 1% 1/8W |
| R349 | 1-214-553-00 | s | METAL 680 1% 1/8W |
| R350 | 1-214-545-00 | s | METAL 330 1% 1/8W |
| R351 | 1-214-533-00 | s | METAL 100 1% 1/8W |
| R352 | 1-214-545-00 | s | METAL 330 1% 1/8W |
| R353 | 1-214-535-00 | s | METAL 120 1% 1/8W |
| R354 | 1-214-535-00 | s | METAL 120 1% 1/8W |
| R355 | 1-214-545-00 | s | METAL 330 1% 1/8W |
| R356 | 1-214-527-00 | s | METAL 56 1% 1/8W |
| R401 | 1-214-543-00 | s | METAL 270 1% 1/8W |
| R402 | 1-214-523-00 | s | METAL 39 1% 1/8W |
| R403 | 1-214-523-00 | s | METAL 39 1% 1/8W |
| R404 | 1-214-543-00 | s | METAL 270 1% 1/8W |
| R405 | 1-214-559-00 | s | METAL 1.2K 1% 1/8W |
| R406 | 1-214-561-00 | s | METAL 1.5k 1% 1/8W |
| R407 | 1-214-541-00 | s | METAL 220 1% 1/8W |
| R408 | 1-214-541-00 | s | METAL 220 1% 1/8W |
| R409 | 1-214-533-00 | s | METAL 100 1% 1/8W |
| R410 | 1-214-525-00 | s | METAL 47 1% 1/8W |
| R411 | 1-214-533-00 | s | METAL 100 1% 1/8W |
| R412 | 1-214-521-00 | s | METAL 33 1% 1/8W |
| R413 | 1-214-521-00 | s | METAL 33 1% 1/8W |
| R414 | 1-214-533-00 | s | METAL 100 1% 1/8W |

(PRD-1 BOARD)

| Ref. No. or Q'ty | Part No. | SP | Description |
|---|---|---|---|
| R415 | 1-214-525-00 | s | METAL 47 1% 1/8W |
| R416 | 1-214-533-00 | s | METAL 100 1% 1/8W |
| R417 | 1-214-525-00 | s | METAL 47 1% 1/8W |
| R418 | 1-214-525-00 | s | METAL 47 1% 1/8W |
| R419 | 1-214-559-00 | s | METAL 1.2K 1% 1/8W |
| R420 | 1-214-559-00 | s | METAL 1.2K 1% 1/8W |
| R421 | 1-214-525-00 | s | METAL 47 1% 1/8W |
| R422 | 1-214-525-00 | s | METAL 47 1% 1/8W |
| R423 | 1-214-525-00 | s | METAL 47 1% 1/8W |
| R424 | 1-214-525-00 | s | METAL 47 1% 1/8W |
| R425 | 1-214-533-00 | s | METAL 100 1% 1/8W |
| R426 | 1-214-553-00 | s | METAL 680 1% 1/8W |
| R427 | 1-214-553-00 | s | METAL 680 1% 1/8W |
| R428 | 1-214-533-00 | s | METAL 100 1% 1/8W |
| R429 | 1-214-533-00 | s | METAL 100 1% 1/8W |
| R430 | 1-214-525-00 | s | METAL 47 1% 1/8W |
| R431 | 1-214-513-00 | s | METAL 15 1% 1/8W |
| R432 | 1-214-513-00 | s | METAL 15 1% 1/8W |
| R433 | 1-214-525-00 | s | METAL 47 1% 1/8W |
| R434 | 1-214-561-00 | s | METAL 1.5k 1% 1/8W |
| R435 | 1-214-549-00 | s | METAL 470 1% 1/8W |
| R436 | 1-214-525-00 | s | METAL 47 1% 1/8W |
| R437 | 1-214-549-00 | s | METAL 470 1% 1/8W |
| R438 | 1-214-561-00 | s | METAL 1.5k 1% 1/8W |
| R440 | 1-214-525-00 | s | METAL 47 1% 1/8W |
| R441 | 1-214-529-00 | s | METAL 68 1% 1/8W |
| R442 | 1-214-525-00 | s | METAL 47 1% 1/8W |
| R443 | 1-214-525-00 | s | METAL 47 1% 1/8W |
| R444 | 1-214-529-00 | s | METAL 68 1% 1/8W |
| R445 | 1-214-525-00 | s | METAL 47 1% 1/8W |
| R446 | 1-215-389-00 | s | METAL 47 1% 1/6W |
| R447 | 1-214-533-00 | s | METAL 100 1% 1/8W |
| R448 | 1-214-557-00 | s | METAL 1K 1% 1/8W |
| R449 | 1-214-553-00 | s | METAL 680 1% 1/8W |
| R450 | 1-214-545-00 | s | METAL 330 1% 1/8W |
| R451 | 1-214-533-00 | s | METAL 100 1% 1/8W |
| R452 | 1-214-545-00 | s | METAL 330 1% 1/8W |
| R453 | 1-214-535-00 | s | METAL 120 1% 1/8W |
| R454 | 1-214-535-00 | s | METAL 120 1% 1/8W |
| R455 | 1-214-545-00 | s | METAL 330 1% 1/8W |
| R456 | 1-214-527-00 | s | METAL 56 1% 1/8W |
| R501 | 1-214-543-00 | s | METAL 270 1% 1/8W |
| R502 | 1-214-523-00 | s | METAL 39 1% 1/8W |
| R503 | 1-214-523-00 | s | METAL 39 1% 1/8W |
| R504 | 1-214-543-00 | s | METAL 270 1% 1/8W |
| R505 | 1-214-559-00 | s | METAL 1.2K 1% 1/8W |
| R506 | 1-214-561-00 | s | METAL 1.5k 1% 1/8W |
| R507 | 1-214-541-00 | s | METAL 220 1% 1/8W |
| R508 | 1-214-541-00 | s | METAL 220 1% 1/8W |
| R509 | 1-214-533-00 | s | METAL 100 1% 1/8W |
| R510 | 1-214-525-00 | s | METAL 47 1% 1/8W |
| R511 | 1-214-533-00 | s | METAL 100 1% 1/8W |
| R512 | 1-214-521-00 | s | METAL 33 1% 1/8W |
| R513 | 1-214-521-00 | s | METAL 33 1% 1/8W |
| R514 | 1-214-533-00 | s | METAL 100 1% 1/8W |
| R515 | 1-214-525-00 | s | METAL 47 1% 1/8W |
| R516 | 1-214-533-00 | s | METAL 100 1% 1/8W |
| R517 | 1-214-525-00 | s | METAL 47 1% 1/8W |
| R518 | 1-214-525-00 | s | METAL 47 1% 1/8W |

(PRD-1 BOARD)

| Ref. No. or Q'ty | Part No. | SP | Description |
|---|---|---|---|
| R519 | 1-214-559-00 | s | METAL 1.2K 1% 1/8W |
| R520 | 1-214-559-00 | s | METAL 1.2K 1% 1/8W |
| R521 | 1-214-525-00 | s | METAL 47 1% 1/8W |
| R522 | 1-214-525-00 | s | METAL 47 1% 1/8W |
| R523 | 1-214-525-00 | s | METAL 47 1% 1/8W |
| R524 | 1-214-525-00 | s | METAL 47 1% 1/8W |
| R525 | 1-214-533-00 | s | METAL 100 1% 1/8W |
| R526 | 1-214-553-00 | s | METAL 680 1% 1/8W |
| R527 | 1-214-553-00 | s | METAL 680 1% 1/8W |
| R528 | 1-214-533-00 | s | METAL 100 1% 1/8W |
| R529 | 1-214-533-00 | s | METAL 100 1% 1/8W |
| R530 | 1-214-525-00 | s | METAL 47 1% 1/8W |
| R531 | 1-214-513-00 | s | METAL 15 1% 1/8W |
| R532 | 1-214-513-00 | s | METAL 15 1% 1/8W |
| R533 | 1-214-525-00 | s | METAL 47 1% 1/8W |
| R534 | 1-214-561-00 | s | METAL 1.5k 1% 1/8W |
| R535 | 1-214-549-00 | s | METAL 470 1% 1/8W |
| R536 | 1-214-525-00 | s | METAL 47 1% 1/8W |
| R537 | 1-214-549-00 | s | METAL 470 1% 1/8W |
| R538 | 1-214-561-00 | s | METAL 1.5k 1% 1/8W |
| R540 | 1-214-525-00 | s | METAL 47 1% 1/8W |
| R541 | 1-214-529-00 | s | METAL 68 1% 1/8W |
| R542 | 1-214-525-00 | s | METAL 47 1% 1/8W |
| R543 | 1-214-525-00 | s | METAL 47 1% 1/8W |
| R544 | 1-214-529-00 | s | METAL 68 1% 1/8W |
| R545 | 1-214-525-00 | s | METAL 47 1% 1/8W |
| R546 | 1-215-389-00 | s | METAL 47 1% 1/6W |
| R547 | 1-214-533-00 | s | METAL 100 1% 1/8W |
| R548 | 1-214-557-00 | s | METAL 1K 1% 1/8W |
| R549 | 1-214-553-00 | s | METAL 680 1% 1/8W |
| R550 | 1-214-545-00 | s | METAL 330 1% 1/8W |
| R551 | 1-214-533-00 | s | METAL 100 1% 1/8W |
| R552 | 1-214-545-00 | s | METAL 330 1% 1/8W |
| R553 | 1-214-535-00 | s | METAL 120 1% 1/8W |
| R554 | 1-214-535-00 | s | METAL 120 1% 1/8W |
| R555 | 1-214-545-00 | s | METAL 330 1% 1/8W |
| R556 | 1-214-527-00 | s | METAL 56 1% 1/8W |
| R601 | 1-214-543-00 | s | METAL 270 1% 1/8W |
| R602 | 1-214-523-00 | s | METAL 39 1% 1/8W |
| R603 | 1-214-523-00 | s | METAL 39 1% 1/8W |
| R604 | 1-214-543-00 | s | METAL 270 1% 1/8W |
| R605 | 1-214-559-00 | s | METAL 1.2K 1% 1/8W |
| R606 | 1-214-561-00 | s | METAL 1.5k 1% 1/8W |
| R607 | 1-214-541-00 | s | METAL 220 1% 1/8W |
| R608 | 1-214-541-00 | s | METAL 220 1% 1/8W |
| R609 | 1-214-533-00 | s | METAL 100 1% 1/8W |
| R610 | 1-214-525-00 | s | METAL 47 1% 1/8W |
| R611 | 1-214-533-00 | s | METAL 100 1% 1/8W |
| R612 | 1-214-521-00 | s | METAL 33 1% 1/8W |
| R613 | 1-214-521-00 | s | METAL 33 1% 1/8W |
| R614 | 1-214-533-00 | s | METAL 100 1% 1/8W |
| R615 | 1-214-525-00 | s | METAL 47 1% 1/8W |
| R616 | 1-214-533-00 | s | METAL 100 1% 1/8W |
| R617 | 1-214-525-00 | s | METAL 47 1% 1/8W |
| R618 | 1-214-525-00 | s | METAL 47 1% 1/8W |
| R619 | 1-214-559-00 | s | METAL 1.2K 1% 1/8W |
| R620 | 1-214-559-00 | s | METAL 1.2K 1% 1/8W |
| R621 | 1-214-525-00 | s | METAL 47 1% 1/8W |
| R622 | 1-214-525-00 | s | METAL 47 1% 1/8W |

| Ref. No. or Q'ty | Part No. | SP | Description |
|---|---|---|---|
| R623 | 1-214-525-00 | s | METAL 47 1% 1/8W |
| R624 | 1-214-525-00 | s | METAL 47 1% 1/8W |
| R625 | 1-214-533-00 | s | METAL 100 1% 1/8W |
| R626 | 1-214-553-00 | s | METAL 680 1% 1/8W |
| R627 | 1-214-553-00 | s | METAL 680 1% 1/8W |
| R628 | 1-214-533-00 | s | METAL 100 1% 1/8W |
| R629 | 1-214-533-00 | s | METAL 100 1% 1/8W |
| R630 | 1-214-525-00 | s | METAL 47 1% 1/8W |
| R631 | 1-214-513-00 | s | METAL 15 1% 1/8W |
| R632 | 1-214-513-00 | s | METAL 15 1% 1/8W |
| R633 | 1-214-525-00 | s | METAL 47 1% 1/8W |
| R634 | 1-214-561-00 | s | METAL 1.5k 1% 1/8W |
| R635 | 1-214-549-00 | s | METAL 470 1% 1/8W |
| R636 | 1-214-525-00 | s | METAL 47 1% 1/8W |
| R637 | 1-214-549-00 | s | METAL 470 1% 1/8W |
| R638 | 1-214-561-00 | s | METAL 1.5k 1% 1/8W |
| R640 | 1-214-525-00 | s | METAL 47 1% 1/8W |
| R641 | 1-214-529-00 | s | METAL 68 1% 1/8W |
| R642 | 1-214-525-00 | s | METAL 47 1% 1/8W |
| R643 | 1-214-525-00 | s | METAL 47 1% 1/8W |
| R644 | 1-214-529-00 | s | METAL 68 1% 1/8W |
| R645 | 1-214-525-00 | s | METAL 47 1% 1/8W |
| R646 | 1-215-389-00 | s | METAL 47 1% 1/6W |
| R647 | 1-214-533-00 | s | METAL 100 1% 1/8W |
| R648 | 1-214-557-00 | s | METAL 1K 1% 1/8W |
| R649 | 1-214-553-00 | s | METAL 680 1% 1/8W |
| R650 | 1-214-545-00 | s | METAL 330 1% 1/8W |
| R651 | 1-214-533-00 | s | METAL 100 1% 1/8W |
| R652 | 1-214-545-00 | s | METAL 330 1% 1/8W |
| R653 | 1-214-535-00 | s | METAL 120 1% 1/8W |
| R654 | 1-214-535-00 | s | METAL 120 1% 1/8W |
| R655 | 1-214-545-00 | s | METAL 330 1% 1/8W |
| R656 | 1-214-527-00 | s | METAL 56 1% 1/8W |
| R701 | 1-214-543-00 | s | METAL 270 1% 1/8W |
| R702 | 1-214-523-00 | s | METAL 39 1% 1/8W |
| R703 | 1-214-523-00 | s | METAL 39 1% 1/8W |
| R704 | 1-214-543-00 | s | METAL 270 1% 1/8W |
| R705 | 1-214-559-00 | s | METAL 1.2K 1% 1/8W |
| R706 | 1-214-561-00 | s | METAL 1.5k 1% 1/8W |
| R707 | 1-214-541-00 | s | METAL 220 1% 1/8W |
| R708 | 1-214-541-00 | s | METAL 220 1% 1/8W |
| R709 | 1-214-533-00 | s | METAL 100 1% 1/8W |
| R710 | 1-214-525-00 | s | METAL 47 1% 1/8W |
| R711 | 1-214-533-00 | s | METAL 100 1% 1/8W |
| R712 | 1-214-521-00 | s | METAL 33 1% 1/8W |
| R713 | 1-214-521-00 | s | METAL 33 1% 1/8W |
| R714 | 1-214-533-00 | s | METAL 100 1% 1/8W |
| R715 | 1-214-525-00 | s | METAL 47 1% 1/8W |
| R716 | 1-214-533-00 | s | METAL 100 1% 1/8W |
| R717 | 1-214-525-00 | s | METAL 47 1% 1/8W |
| R718 | 1-214-525-00 | s | METAL 47 1% 1/8W |
| R719 | 1-214-559-00 | s | METAL 1.2K 1% 1/8W |
| R720 | 1-214-559-00 | s | METAL 1.2K 1% 1/8W |
| R721 | 1-214-525-00 | s | METAL 47 1% 1/8W |
| R722 | 1-214-525-00 | s | METAL 47 1% 1/8W |
| R723 | 1-214-525-00 | s | METAL 47 1% 1/8W |
| R724 | 1-214-525-00 | s | METAL 47 1% 1/8W |
| R725 | 1-214-533-00 | s | METAL 100 1% 1/8W |
| R726 | 1-214-553-00 | s | METAL 680 1% 1/8W |

| Ref. No. or Q'ty | Part No. | SP | Description |
|---|---|---|---|
| R727 | 1-214-553-00 | s | METAL 680 1% 1/8W |
| R728 | 1-214-533-00 | s | METAL 100 1% 1/8W |
| R729 | 1-214-533-00 | s | METAL 100 1% 1/8W |
| R730 | 1-214-525-00 | s | METAL 47 1% 1/8W |
| R731 | 1-214-513-00 | s | METAL 15 1% 1/8W |
| R732 | 1-214-513-00 | s | METAL 15 1% 1/8W |
| R733 | 1-214-525-00 | s | METAL 47 1% 1/8W |
| R734 | 1-214-561-00 | s | METAL 1.5k 1% 1/8W |
| R735 | 1-214-549-00 | s | METAL 470 1% 1/8W |
| R736 | 1-214-525-00 | s | METAL 47 1% 1/8W |
| R737 | 1-214-549-00 | s | METAL 470 1% 1/8W |
| R738 | 1-214-561-00 | s | METAL 1.5k 1% 1/8W |
| R740 | 1-214-525-00 | s | METAL 47 1% 1/8W |
| R741 | 1-214-529-00 | s | METAL 68 1% 1/8W |
| R742 | 1-214-525-00 | s | METAL 47 1% 1/8W |
| R743 | 1-214-525-00 | s | METAL 47 1% 1/8W |
| R744 | 1-214-529-00 | s | METAL 68 1% 1/8W |
| R745 | 1-214-525-00 | s | METAL 47 1% 1/8W |
| R746 | 1-215-389-00 | s | METAL 47 1% 1/6W |
| R747 | 1-214-533-00 | s | METAL 100 1% 1/8W |
| R748 | 1-214-557-00 | s | METAL 1K 1% 1/8W |
| R749 | 1-214-553-00 | s | METAL 680 1% 1/8W |
| R750 | 1-214-545-00 | s | METAL 330 1% 1/8W |
| R751 | 1-214-533-00 | s | METAL 100 1% 1/8W |
| R752 | 1-214-545-00 | s | METAL 330 1% 1/8W |
| R753 | 1-214-535-00 | s | METAL 120 1% 1/8W |
| R754 | 1-214-535-00 | s | METAL 120 1% 1/8W |
| R755 | 1-214-545-00 | s | METAL 330 1% 1/8W |
| R756 | 1-214-527-00 | s | METAL 56 1% 1/8W |
| R801 | 1-214-543-00 | s | METAL 270 1% 1/8W |
| R802 | 1-214-523-00 | s | METAL 39 1% 1/8W |
| R803 | 1-214-523-00 | s | METAL 39 1% 1/8W |
| R804 | 1-214-543-00 | s | METAL 270 1% 1/8W |
| R805 | 1-214-559-00 | s | METAL 1.2K 1% 1/8W |
| R806 | 1-214-561-00 | s | METAL 1.5k 1% 1/8W |
| R807 | 1-214-541-00 | s | METAL 220 1% 1/8W |
| R808 | 1-214-541-00 | s | METAL 220 1% 1/8W |
| R809 | 1-214-533-00 | s | METAL 100 1% 1/8W |
| R810 | 1-214-525-00 | s | METAL 47 1% 1/8W |
| R811 | 1-214-533-00 | s | METAL 100 1% 1/8W |
| R812 | 1-214-521-00 | s | METAL 33 1% 1/8W |
| R813 | 1-214-521-00 | s | METAL 33 1% 1/8W |
| R814 | 1-214-533-00 | s | METAL 100 1% 1/8W |
| R815 | 1-214-525-00 | s | METAL 47 1% 1/8W |
| R816 | 1-214-533-00 | s | METAL 100 1% 1/8W |
| R817 | 1-214-525-00 | s | METAL 47 1% 1/8W |
| R818 | 1-214-525-00 | s | METAL 47 1% 1/8W |
| R819 | 1-214-559-00 | s | METAL 1.2K 1% 1/8W |
| R820 | 1-214-559-00 | s | METAL 1.2K 1% 1/8W |
| R821 | 1-214-525-00 | s | METAL 47 1% 1/8W |
| R822 | 1-214-525-00 | s | METAL 47 1% 1/8W |
| R823 | 1-214-525-00 | s | METAL 47 1% 1/8W |
| R824 | 1-214-525-00 | s | METAL 47 1% 1/8W |
| R825 | 1-214-533-00 | s | METAL 100 1% 1/8W |
| R826 | 1-214-553-00 | s | METAL 680 1% 1/8W |
| R827 | 1-214-553-00 | s | METAL 680 1% 1/8W |
| R828 | 1-214-533-00 | s | METAL 100 1% 1/8W |
| R829 | 1-214-533-00 | s | METAL 100 1% 1/8W |
| R830 | 1-214-525-00 | s | METAL 47 1% 1/8W |

(PRD-1 BOARD)

| Ref. No.<br>or Q'ty | Part No. | SP | Description |
|---|---|---|---|
| R831 | 1-214-513-00 | s | METAL 15 1% 1/8W |
| R832 | 1-214-513-00 | s | METAL 15 1% 1/8W |
| R833 | 1-214-525-00 | s | METAL 47 1% 1/8W |
| R834 | 1-214-561-00 | s | METAL 1.5k 1% 1/8W |
| R835 | 1-214-549-00 | s | METAL 470 1% 1/8W |
| R836 | 1-214-525-00 | s | METAL 47 1% 1/8W |
| R837 | 1-214-549-00 | s | METAL 470 1% 1/8W |
| R838 | 1-214-561-00 | s | METAL 1.5k 1% 1/8W |
| R840 | 1-214-525-00 | s | METAL 47 1% 1/8W |
| R841 | 1-214-529-00 | s | METAL 68 1% 1/8W |
| R842 | 1-214-525-00 | s | METAL 47 1% 1/8W |
| R843 | 1-214-525-00 | s | METAL 47 1% 1/8W |
| R844 | 1-214-529-00 | s | METAL 68 1% 1/8W |
| R845 | 1-214-525-00 | s | METAL 47 1% 1/8W |
| R846 | 1-215-389-00 | s | METAL 47 1% 1/6W |
| R847 | 1-214-533-00 | s | METAL 100 1% 1/8W |
| R848 | 1-214-557-00 | s | METAL 1K 1% 1/8W |
| R849 | 1-214-553-00 | s | METAL 680 1% 1/8W |
| R850 | 1-214-545-00 | s | METAL 330 1% 1/8W |
| R851 | 1-214-533-00 | s | METAL 100 1% 1/8W |
| R852 | 1-214-545-00 | s | METAL 330 1% 1/8W |
| R853 | 1-214-535-00 | s | METAL 120 1% 1/8W |
| R854 | 1-214-535-00 | s | METAL 120 1% 1/8W |
| R855 | 1-214-545-00 | s | METAL 330 1% 1/8W |
| R856 | 1-214-527-00 | s | METAL 56 1% 1/8W |
| RB1 | 1-231-489-11 | s | RESISTOR BLOCK 150X4 |
| RB2 | 1-231-485-11 | s | RESISTOR BLOCK 100x4 |
| RB3 | 1-231-533-00 | s | RESISTOR BLOCK 10Kx4 |
| RB4 | 1-231-501-00 | s | RESISTOR BLOCK 470x4 |
| RB5 | 1-236-321-11 | s | RESISTOR BLOCK 68X4 |
| RB6 | 1-231-501-00 | s | RESISTOR BLOCK 470x4 |
| RB7 | 1-231-493-00 | s | RESISTOR BLOCK 220X4 |
| RB8 | 1-236-321-11 | s | RESISTOR BLOCK 68X4 |
| RB9 | 1-231-489-11 | s | RESISTOR BLOCK 150X4 |
| RB10 | 1-236-321-11 | s | RESISTOR BLOCK 68X4 |
| RB11 | 1-231-489-11 | s | RESISTOR BLOCK 150X4 |
| RB12 | 1-236-321-11 | s | RESISTOR BLOCK 68X4 |
| RB13 | 1-231-485-11 | s | RESISTOR BLOCK 100x4 |
| RB14 | 1-231-501-00 | s | RESISTOR BLOCK 470x4 |
| RB15 | 1-231-410-00 | s | RESISTOR BLOCK 10Kx8 |
| RB16 | 1-231-501-00 | s | RESISTOR BLOCK 470x4 |
| RB17 | 1-231-493-00 | s | RESISTOR BLOCK 220X4 |
| RB18 | 1-231-489-11 | s | RESISTOR BLOCK 150X4 |
| RB19 | 1-231-489-11 | s | RESISTOR BLOCK 150X4 |
| RB20 | 1-231-485-11 | s | RESISTOR BLOCK 100x4 |
| RB21 | 1-231-489-11 | s | RESISTOR BLOCK 150X4 |
| RB22 | 1-231-485-11 | s | RESISTOR BLOCK 100x4 |
| RB23 | 1-231-501-00 | s | RESISTOR BLOCK 470x4 |
| RB24 | 1-231-501-00 | s | RESISTOR BLOCK 470x4 |
| RV3 | 1-237-502-21 | s | RES, ADJ, METAL 5K |
| RV4 | 1-237-502-21 | s | RES, ADJ, METAL 5K |
| RV5 | 1-237-502-21 | s | RES, ADJ, METAL 5K |
| RV6 | 1-237-502-21 | s | RES, ADJ, METAL 5K |
| RV7 | 1-237-502-21 | s | RES, ADJ, METAL 5K |
| RV8 | 1-237-502-21 | s | RES, ADJ, METAL 5K |
| RV9 | 1-237-502-21 | s | RES, ADJ, METAL 5K |
| RV10 | 1-237-502-21 | s | RES, ADJ, METAL 5K |
| S1 | 1-571-094-11 | s | SWITCH, DIP 8-CKT |

(PRD-1 BOARD)

| Ref. No.<br>or Q'ty | Part No. | SP | Description |
|---|---|---|---|
| X1 | 1-577-597-11 | s | OSCILLATOR, CRYSTAL 27.000MHz |

## RM-43 BOARD

| Ref. No. or Q'ty | Part No. | SP | Description |
|---|---|---|---|
| 1pc | A-6015-100-A | o | MOUNTED CIRCUIT BOARD, RM-43 |
| 4pcs | 7-682-947-01 | s | SCREW +PSW 3X6 |
| 12pcs | 7-682-652-09 | s | SCREW +PS 3X16 |
| 4pcs | 7-682-647-09 | s | SCREW +PS 3X6 |
| 2pcs | 7-682-903-41 | s | SCREW +PWH 3X12 |
| C1 | 1-106-351-00 | s | MYLAR 0.0022 5% 200V |
| C2 | 1-106-351-00 | s | MYLAR 0.0022 5% 200V |
| C3 | 1-124-798-11 | s | ELECT 1 20% 160V |
| C4 | 1-124-798-11 | s | ELECT 1 20% 160V |
| C5 | 1-124-798-11 | s | ELECT 1 20% 160V |
| C6 | 1-106-379-12 | s | MYLAR 0.033 5% 200V |
| C7 | 1-106-379-12 | s | MYLAR 0.033 5% 200V |
| C8 | 1-106-379-12 | s | MYLAR 0.033 5% 200V |
| C9 | 1-123-605-00 | s | ELECT 100 20% 100V |
| C10 | 1-123-605-00 | s | ELECT 100 20% 100V |
| C11 | 1-106-379-12 | s | MYLAR 0.033 5% 200V |
| C12 | 1-106-379-12 | s | MYLAR 0.033 5% 200V |
| C13 | 1-106-379-12 | s | MYLAR 0.033 5% 200V |
| C14 | 1-124-798-11 | s | ELECT 1 20% 160V |
| C15 | 1-124-798-11 | s | ELECT 1 20% 160V |
| C16 | 1-124-798-11 | s | ELECT 1 20% 160V |
| C17 | 1-106-351-00 | s | MYLAR 0.0022 5% 200V |
| C18 | 1-106-351-00 | s | MYLAR 0.0022 5% 200V |
| C19 | 1-106-351-00 | s | MYLAR 0.0022 5% 200V |
| C20 | 1-109-621-00 | s | MICA 220PF 1% 500V |
| C21 | 1-109-621-00 | s | MICA 220PF 1% 500V |
| C22 | 1-109-621-00 | s | MICA 220PF 1% 500V |
| C23 | 1-106-351-00 | s | MYLAR 0.0022 5% 200V |
| C24 | 1-109-621-00 | s | MICA 220PF 1% 500V |
| C25 | 1-109-621-00 | s | MICA 220PF 1% 500V |
| C26 | 1-109-621-00 | s | MICA 220PF 1% 500V |
| C27 | 1-161-055-00 | s | CERAMIC 0.022uF 10% 50V |
| C28 | 1-130-471-00 | s | MYLAR 0.001uF 5% 50V |
| C29 | 1-161-055-00 | s | CERAMIC 0.022uF 10% 50V |
| C30 | 1-124-907-11 | s | ELECT 10uF 20% 50V |
| C31 | 1-124-907-11 | s | ELECT 10uF 20% 50V |
| C32 | 1-161-055-00 | s | CERAMIC 0.022uF 10% 50V |
| C33 | 1-130-471-00 | s | MYLAR 0.001uF 5% 50V |
| C34 | 1-161-055-00 | s | CERAMIC 0.022uF 10% 50V |
| C35 | 1-161-055-00 | s | CERAMIC 0.022uF 10% 50V |
| C36 | 1-124-120-11 | s | ELECT 220uF 20% 25V |
| C37 | 1-107-202-00 | s | MICA 10PF 5% 500V |
| C38 | 1-161-055-00 | s | CERAMIC 0.022uF 10% 50V |
| C39 | 1-130-495-00 | s | MYLAR 0.1uF 5% 50V |
| C40 | 1-161-055-00 | s | CERAMIC 0.022uF 10% 50V |
| C41 | 1-124-907-11 | s | ELECT 10uF 20% 50V |
| C42 | 1-130-495-00 | s | MYLAR 0.1uF 5% 50V |
| C43 | 1-161-055-00 | s | CERAMIC 0.022uF 10% 50V |
| C44 | 1-107-202-00 | s | MICA 10PF 5% 500V |
| C45 | 1-124-120-11 | s | ELECT 220uF 20% 25V |
| C46 | 1-130-495-00 | s | MYLAR 0.1uF 5% 50V |
| C47 | 1-124-126-00 | s | ELECT 47uF 20% 25V |
| C48 | 1-107-202-00 | s | MICA 10PF 5% 500V |
| C49 | 1-161-055-00 | s | CERAMIC 0.022uF 10% 50V |
| C50 | 1-161-055-00 | s | CERAMIC 0.022uF 10% 50V |
| C51 | 1-130-495-00 | s | MYLAR 0.1uF 5% 50V |
| C52 | 1-161-055-00 | s | CERAMIC 0.022uF 10% 50V |
| C53 | 1-161-055-00 | s | CERAMIC 0.022uF 10% 50V |
| C54 | 1-130-495-00 | s | MYLAR 0.1uF 5% 50V |

(RM-43 BOARD)

| Ref. No. or Q'ty | Part No. | SP | Description |
|---|---|---|---|
| C55 | 1-161-055-00 | s | CERAMIC 0.022uF 10% 50V |
| C56 | 1-107-202-00 | s | MICA 10PF 5% 500V |
| C57 | 1-130-477-00 | s | MYLAR 0.0033uF 5% 50V |
| C58 | 1-130-495-00 | s | MYLAR 0.1uF 5% 50V |
| C59 | 1-161-055-00 | s | CERAMIC 0.022uF 10% 50V |
| C60 | 1-102-074-00 | s | CERAMIC 0.001uF 10% 50V |
| C61 | 1-161-055-00 | s | CERAMIC 0.022uF 10% 50V |
| C62 | 1-161-055-00 | s | CERAMIC 0.022uF 10% 50V |
| C63 | 1-130-477-00 | s | MYLAR 0.0033uF 5% 50V |
| C64 | 1-161-055-00 | s | CERAMIC 0.022uF 10% 50V |
| C65 | 1-102-074-00 | s | CERAMIC 0.001uF 10% 50V |
| C66 | 1-124-126-00 | s | ELECT 47uF 20% 25V |
| C67 | 1-161-055-00 | s | CERAMIC 0.022uF 10% 50V |
| C68 | 1-161-055-00 | s | CERAMIC 0.022uF 10% 50V |
| C69 | 1-124-566-11 | s | ELECT 120uF 20% 6.3V |
| C70 | 1-161-055-00 | s | CERAMIC 0.022uF 10% 50V |
| C71 | 1-161-055-00 | s | CERAMIC 0.022uF 10% 50V |
| C72 | 1-161-055-00 | s | CERAMIC 0.022uF 10% 50V |
| C73 | 1-161-055-00 | s | CERAMIC 0.022uF 10% 50V |
| C74 | 1-124-943-11 | s | ELECT 39 20% 25V |
| C75 | 1-161-055-00 | s | CERAMIC 0.022uF 10% 50V |
| C76 | 1-124-943-11 | s | ELECT 39 20% 25V |
| C77 | 1-161-055-00 | s | CERAMIC 0.022uF 10% 50V |
| C78 | 1-161-055-00 | s | CERAMIC 0.022uF 10% 50V |
| C79 | 1-161-055-00 | s | CERAMIC 0.022uF 10% 50V |
| C80 | 1-107-085-00 | s | MICA 100PF 5% 50V |
| C81 | 1-107-085-00 | s | MICA 100PF 5% 50V |
| CN201 | ⚠1-560-178-00 | o | CONNECTOR, 6P, MALE |
| CN202 | 1-560-178-00 | o | CONNECTOR, 6P, MALE |
| CN203 | ⚠1-560-178-00 | o | CONNECTOR, 6P, MALE |
| CN204 | 1-560-724-00 | o | CONNECTOR, 10P, MALE |
| CN205 | 1-560-724-00 | o | CONNECTOR, 10P, MALE |
| CN206 | 1-560-303-00 | o | CONNECTOR, IL 6P, MALE |
| CN207 | 1-560-303-00 | o | CONNECTOR, IL 6P, MALE |
| CN208 | 1-560-728-00 | o | CONNECTOR, 30P, MALE |
| D1 | 8-719-912-51 | s | DIODE ESAC25-04C |
| D2 | 8-719-912-51 | s | DIODE ESAC25-04C |
| D3 | 8-719-912-51 | s | DIODE ESAC25-04C |
| D4 | 8-719-912-51 | s | DIODE ESAC25-04C |
| D5 | 8-719-912-51 | s | DIODE ESAC25-04C |
| D6 | 8-719-912-51 | s | DIODE ESAC25-04C |
| D7 | 8-719-911-19 | s | DIODE 1SS119 |
| D8 | 8-719-911-19 | s | DIODE 1SS119 |
| D9 | 8-719-911-19 | s | DIODE 1SS119 |
| D10 | 8-719-936-56 | s | DIODE DAN209S |
| D11 | 8-719-936-56 | s | DIODE DAN209S |
| D12 | 8-719-936-56 | s | DIODE DAN209S |
| D13 | 8-719-936-56 | s | DIODE DAN209S |
| D14 | 8-719-936-56 | s | DIODE DAN209S |
| D15 | 8-719-911-19 | s | DIODE 1SS119 |
| D16 | 8-719-911-19 | s | DIODE 1SS119 |
| D17 | 8-719-911-19 | s | DIODE 1SS119 |
| D18 | 8-719-933-28 | s | DIODE DAP209S |
| D19 | 8-719-933-28 | s | DIODE DAP209S |
| D20 | 8-719-911-19 | s | DIODE 1SS119 |
| D21 | 8-719-911-19 | s | DIODE 1SS119 |
| D22 | 8-719-911-19 | s | DIODE 1SS119 |
| D23 | 8-719-911-19 | s | DIODE 1SS119 |

(RM-43 BOARD)

| Ref. No. or Q'ty | Part No. | SP | Description |
|---|---|---|---|
| D24 | 8-719-109-85 | s | DIODE RD5.1ES-B2 |
| D25 | 8-719-911-19 | s | DIODE 1SS119 |
| D26 | 8-719-109-85 | s | DIODE RD5.1ES-B2 |
| D27 | 8-719-933-28 | s | DIODE DAP209S |
| D28 | 8-719-933-28 | s | DIODE DAP209S |
| D29 | 8-719-110-17 | s | DIODE RD10ES-B2 |
| IC1 | 8-759-945-58 | s | IC UPC4558C |
| IC2 | 8-759-945-58 | s | IC UPC4558C |
| IC3 | 8-759-729-03 | s | IC NJM2903D |
| IC4 | 8-759-729-03 | s | IC NJM2903D |
| IC5 | 8-759-945-58 | s | IC UPC4558C |
| IC6 | 8-759-945-58 | s | IC UPC4558C |
| IC7 | 8-759-945-58 | s | IC UPC4558C |
| IC8 | 8-759-945-58 | s | IC UPC4558C |
| IC9 | 8-759-945-58 | s | IC UPC4558C |
| IC10 | 8-759-945-58 | s | IC UPC4558C |
| IC11 | 8-759-729-03 | s | IC NJM2903D |
| IC12 | 8-759-945-58 | s | IC UPC4558C |
| IC13 | 8-759-729-03 | s | IC NJM2903D |
| IC14 | 8-759-945-58 | s | IC UPC4558C |
| IC15 | 8-759-729-03 | s | IC NJM2903D |
| IC16 | 8-759-040-70 | s | IC MC14070BCP |
| IC17 | 8-759-205-76 | s | IC TC504013BP |
| IC18 | 8-759-345-38 | s | IC HD14538BP |
| IC19 | 8-759-240-71 | s | IC TC4071BP |
| IC20 | 8-759-040-70 | s | IC MC14070BCP |
| IC21 | 8-759-135-80 | s | IC UPC358C |
| IC22 | 8-759-729-03 | s | IC NJM2903D |
| IC23 | 8-759-945-58 | s | IC UPC4558C |
| IC24 | 8-759-135-80 | s | IC UPC358C |
| IC25 | 8-759-208-44 | s | IC MP4504 |
| IC26 | 8-759-208-44 | s | IC MP4504 |
| L1 | 1-421-370-00 | s | COIL, CHOKE |
| L2 | 1-421-370-00 | s | COIL, CHOKE |
| L3 | 1-421-370-00 | s | COIL, CHOKE |
| Q1 | 8-729-303-73 | s | TRANSISTOR 2SC3857-O |
| Q2 | 8-729-303-73 | s | TRANSISTOR 2SC3857-O |
| Q3 | 8-729-303-73 | s | TRANSISTOR 2SC3857-O |
| Q4 | 8-729-303-73 | s | TRANSISTOR 2SC3857-O |
| Q5 | 8-729-303-73 | s | TRANSISTOR 2SC3857-O |
| Q6 | 8-729-303-73 | s | TRANSISTOR 2SC3857-O |
| Q7 | 8-729-201-32 | s | TRANSISTOR 2SA1013 |
| Q8 | 8-729-238-32 | s | TRANSISTOR 2SC2383-Y |
| Q9 | 8-729-201-32 | s | TRANSISTOR 2SA1013 |
| Q10 | 8-729-238-32 | s | TRANSISTOR 2SC2383-Y |
| Q11 | 8-729-900-89 | s | TRANSISTOR DTC144ES |
| Q12 | 8-729-900-89 | s | TRANSISTOR DTC144ES |
| Q15 | 8-729-238-32 | s | TRANSISTOR 2SC2383-Y |
| Q16 | 8-729-238-32 | s | TRANSISTOR 2SC2383-Y |
| Q17 | 8-729-238-32 | s | TRANSISTOR 2SC2383-Y |
| Q18 | 8-729-238-32 | s | TRANSISTOR 2SC2383-Y |
| Q19 | 8-729-238-32 | s | TRANSISTOR 2SC2383-Y |
| Q20 | 8-729-238-32 | s | TRANSISTOR 2SC2383-Y |
| Q21 | 8-729-900-63 | s | TRANSISTOR DTA124ES |
| Q22 | 8-729-873-40 | s | TRANSISTOR 2SD734-B |
| Q23 | 8-729-900-63 | s | TRANSISTOR DTA124ES |
| Q24 | 8-729-873-40 | s | TRANSISTOR 2SD734-B |

(RM-43 BOARD)

| Ref. No. or Q'ty | Part No. | SP | Description |
|---|---|---|---|
| Q25 | 8-729-900-63 | s | TRANSISTOR DTA124ES |
| Q26 | 8-729-873-40 | s | TRANSISTOR 2SD734-B |
| Q27 | 8-729-900-63 | s | TRANSISTOR DTA124ES |
| Q28 | 8-729-873-40 | s | TRANSISTOR 2SD734-B |
| Q29 | 8-729-873-40 | s | TRANSISTOR 2SD734-B |
| Q30 | 8-729-900-63 | s | TRANSISTOR DTA124ES |
| Q31 | 8-729-873-40 | s | TRANSISTOR 2SD734-B |
| Q32 | 8-729-900-63 | s | TRANSISTOR DTA124ES |
| Q33 | 8-729-119-78 | s | TRANSISTOR 2SC2785-HFE |
| Q34 | 8-729-900-36 | s | TRANSISTOR DTC124ES |
| Q35 | 8-729-119-78 | s | TRANSISTOR 2SC2785-HFE |
| Q36 | 8-729-900-36 | s | TRANSISTOR DTC124ES |
| Q37 | 8-729-900-36 | s | TRANSISTOR DTC124ES |
| Q38 | 8-729-900-36 | s | TRANSISTOR DTC124ES |
| Q39 | 8-729-900-36 | s | TRANSISTOR DTC124ES |
| Q40 | 8-729-900-36 | s | TRANSISTOR DTC124ES |
| Q41 | 8-729-900-36 | s | TRANSISTOR DTC124ES |
| Q42 | 8-729-904-34 | s | TRANSISTOR DTA114TS |
| Q43 | 8-729-900-36 | s | TRANSISTOR DTC124ES |
| Q44 | 8-729-900-36 | s | TRANSISTOR DTC124ES |
| Q45 | 8-729-900-36 | s | TRANSISTOR DTC124ES |
| Q46 | 8-729-900-89 | s | TRANSISTOR DTC144ES |
| Q47 | 8-729-904-34 | s | TRANSISTOR DTA114TS |
| Q48 | 8-729-900-36 | s | TRANSISTOR DTC124ES |
| Q49 | 8-729-119-78 | s | TRANSISTOR 2SC2785-HFE |
| R1 | 1-249-431-11 | s | CARBON 15K 5% 1/4W |
| R2 | 1-249-417-11 | s | CARBON 1K 5% 1/4W |
| R3 | 1-249-412-11 | s | CARBON 390 5% 1/4W |
| R4 | 1-249-412-11 | s | CARBON 390 5% 1/4W |
| R5 | 1-249-458-11 | s | CARBON 8.2 5% 1/4W |
| R6 | 1-249-458-11 | s | CARBON 8.2 5% 1/4W |
| R7 | 1-249-458-11 | s | CARBON 8.2 5% 1/4W |
| R8 | 1-249-412-11 | s | CARBON 390 5% 1/4W |
| R9 | 1-216-383-11 | s | METAL 0.33 5% 3W |
| R10 | 1-216-383-11 | s | METAL 0.33 5% 3W |
| R11 | 1-249-458-11 | s | CARBON 8.2 5% 1/4W |
| R12 | 1-249-458-11 | s | CARBON 8.2 5% 1/4W |
| R13 | 1-249-412-11 | s | CARBON 390 5% 1/4W |
| R14 | 1-249-412-11 | s | CARBON 390 5% 1/4W |
| R15 | 1-249-412-11 | s | CARBON 390 5% 1/4W |
| R16 | 1-249-458-11 | s | CARBON 8.2 5% 1/4W |
| R17 | 1-249-431-11 | s | CARBON 15K 5% 1/4W |
| R18 | 1-249-417-11 | s | CARBON 1K 5% 1/4W |
| R19 | 1-215-461-00 | s | METAL 47K 1% 1/6W |
| R20 | 1-215-461-00 | s | METAL 47K 1% 1/6W |
| R21 | ⚠1-247-752-11 | s | CARBON 1K 5% 1/2W |
| R22 | ⚠1-247-752-11 | s | CARBON 1K 5% 1/2W |
| R23 | ⚠1-247-752-11 | s | CARBON 1K 5% 1/2W |
| R24 | ⚠1-249-397-11 | s | CARBON 22 5% 1/4W |
| R25 | ⚠1-249-397-11 | s | CARBON 22 5% 1/4W |
| R26 | ⚠1-249-397-11 | s | CARBON 22 5% 1/4W |
| R27 | ⚠1-249-397-11 | s | CARBON 22 5% 1/4W |
| R28 | ⚠1-249-397-11 | s | CARBON 22 5% 1/4W |
| R29 | ⚠1-249-397-11 | s | CARBON 22 5% 1/4W |
| R30 | ⚠1-247-752-11 | s | CARBON 1K 5% 1/2W |
| R31 | ⚠1-247-752-11 | s | CARBON 1K 5% 1/2W |
| R32 | ⚠1-247-752-11 | s | CARBON 1K 5% 1/2W |
| R33 | 1-215-461-00 | s | METAL 47K 1% 1/6W |
| R34 | 1-215-461-00 | s | METAL 47K 1% 1/6W |

| Ref. No. or Q'ty | Part No. | SP | Description |
|---|---|---|---|
| R35 | 1-249-437-11 | s | CARBON 47K 5% 1/4W |
| R36 | 1-249-421-11 | s | CARBON 2.2K 5% 1/4W |
| R37 | 1-249-421-11 | s | CARBON 2.2K 5% 1/4W |
| R38 | 1-249-421-11 | s | CARBON 2.2K 5% 1/4W |
| R39 | 1-215-461-00 | s | METAL 47K 1% 1/6W |
| R40 | 1-215-461-00 | s | METAL 47K 1% 1/6W |
| R41 | 1-215-461-00 | s | METAL 47K 1% 1/6W |
| R42 | 1-215-461-00 | s | METAL 47K 1% 1/6W |
| R43 | 1-249-417-11 | s | CARBON 1K 5% 1/4W |
| R44 | 1-215-462-00 | s | METAL 51K 1% 1/6W |
| R45 | 1-249-418-11 | s | CARBON 1.2K 5% 1/4W |
| R46 | 1-249-435-11 | s | CARBON 33K 5% 1/4W |
| R47 | 1-215-462-00 | s | METAL 51K 1% 1/6W |
| R48 | ⚠1-247-717-11 | s | CARBON 2.2K 5% 1/4W |
| R49 | 1-249-435-11 | s | CARBON 33K 5% 1/4W |
| R50 | 1-215-462-00 | s | METAL 51K 1% 1/6W |
| R51 | ⚠1-247-717-11 | s | CARBON 2.2K 5% 1/4W |
| R52 | 1-249-417-11 | s | CARBON 1K 5% 1/4W |
| R53 | 1-215-462-00 | s | METAL 51K 1% 1/6W |
| R54 | 1-249-418-11 | s | CARBON 1.2K 5% 1/4W |
| R55 | 1-215-461-00 | s | METAL 47K 1% 1/6W |
| R56 | 1-215-461-00 | s | METAL 47K 1% 1/6W |
| R57 | 1-215-461-00 | s | METAL 47K 1% 1/6W |
| R58 | 1-215-461-00 | s | METAL 47K 1% 1/6W |
| R59 | 1-249-421-11 | s | CARBON 2.2K 5% 1/4W |
| R60 | 1-249-421-11 | s | CARBON 2.2K 5% 1/4W |
| R61 | 1-249-421-11 | s | CARBON 2.2K 5% 1/4W |
| R62 | 1-249-437-11 | s | CARBON 47K 5% 1/4W |
| R63 | 1-249-417-11 | s | CARBON 1K 5% 1/4W |
| R64 | 1-249-417-11 | s | CARBON 1K 5% 1/4W |
| R65 | 1-249-417-11 | s | CARBON 1K 5% 1/4W |
| R66 | 1-249-418-11 | s | CARBON 1.2K 5% 1/4W |
| R67 | 1-249-485-11 | s | CARBON 8.2 5% 1/2W |
| R68 | 1-249-424-11 | s | CARBON 3.9K 5% 1/4W |
| R69 | 1-249-418-11 | s | CARBON 1.2K 5% 1/4W |
| R70 | ⚠1-247-717-11 | s | CARBON 2.2K 5% 1/4W |
| R71 | 1-249-411-11 | s | CARBON 330 5% 1/4W |
| R72 | 1-249-419-11 | s | CARBON 1.5K 5% 1/4W |
| R73 | 1-249-418-11 | s | CARBON 1.2K 5% 1/4W |
| R74 | ⚠1-247-717-11 | s | CARBON 2.2K 5% 1/4W |
| R75 | 1-249-411-11 | s | CARBON 330 5% 1/4W |
| R76 | 1-249-411-11 | s | CARBON 330 5% 1/4W |
| R77 | 1-249-411-11 | s | CARBON 330 5% 1/4W |
| R78 | ⚠1-247-717-11 | s | CARBON 2.2K 5% 1/4W |
| R79 | 1-249-418-11 | s | CARBON 1.2K 5% 1/4W |
| R80 | 1-249-411-11 | s | CARBON 330 5% 1/4W |
| R81 | 1-249-418-11 | s | CARBON 1.2K 5% 1/4W |
| R82 | ⚠1-247-717-11 | s | CARBON 2.2K 5% 1/4W |
| R83 | 1-249-411-11 | s | CARBON 330 5% 1/4W |
| R84 | ⚠1-249-419-11 | s | CARBON 1.5K 5% 1/4W |
| R85 | ⚠1-249-424-11 | s | CARBON 3.9K 5% 1/4W |
| R86 | ⚠1-249-485-11 | s | CARBON 8.2 5% 1/2W |
| R87 | 1-249-417-11 | s | CARBON 1K 5% 1/4W |
| R88 | 1-249-417-11 | s | CARBON 1K 5% 1/4W |
| R89 | 1-249-417-11 | s | CARBON 1K 5% 1/4W |
| R90 | 1-249-418-11 | s | CARBON 1.2K 5% 1/4W |
| R91 | 1-249-418-11 | s | CARBON 1.2K 5% 1/4W |
| R92 | 1-249-421-11 | s | CARBON 2.2K 5% 1/4W |
| R93 | 1-249-429-11 | s | CARBON 10K 5% 1/4W |

| Ref. No. or Q'ty | Part No. | SP | Description |
|---|---|---|---|
| R94 | 1-249-417-11 | s | CARBON 1K 5% 1/4W |
| R95 | 1-249-418-11 | s | CARBON 1.2K 5% 1/4W |
| R96 | 1-249-421-11 | s | CARBON 2.2K 5% 1/4W |
| R97 | 1-249-421-11 | s | CARBON 2.2K 5% 1/4W |
| R98 | 1-215-429-00 | s | METAL 2.2K 1% 1/6W |
| R99 | 1-215-444-00 | s | METAL 9.1K 1% 1/6W |
| R100 | 1-247-893-11 | s | CARBON 390K 5% 1/4W |
| R101 | 1-249-434-11 | s | CARBON 27K 5% 1/4W |
| R102 | 1-249-441-11 | s | CARBON 100K 5% 1/4W |
| R103 | 1-249-436-11 | s | CARBON 39K 5% 1/4W |
| R104 | 1-249-439-11 | s | CARBON 68K 5% 1/4W |
| R105 | 1-215-447-00 | s | METAL 12K 1% 1/6W |
| R106 | 1-215-477-00 | s | METAL 220K 1% 1/6W |
| R107 | 1-215-421-00 | s | METAL 1K 1% 1/6W |
| R108 | 1-247-893-11 | s | CARBON 390K 5% 1/4W |
| R109 | 1-249-421-11 | s | CARBON 2.2K 5% 1/4W |
| R110 | 1-215-444-00 | s | METAL 9.1K 1% 1/6W |
| R111 | 1-215-429-00 | s | METAL 2.2K 1% 1/6W |
| R112 | 1-249-421-11 | s | CARBON 2.2K 5% 1/4W |
| R113 | 1-249-418-11 | s | CARBON 1.2K 5% 1/4W |
| R114 | 1-249-421-11 | s | CARBON 2.2K 5% 1/4W |
| R115 | 1-249-417-11 | s | CARBON 1K 5% 1/4W |
| R116 | 1-249-429-11 | s | CARBON 10K 5% 1/4W |
| R117 | 1-249-421-11 | s | CARBON 2.2K 5% 1/4W |
| R118 | 1-249-418-11 | s | CARBON 1.2K 5% 1/4W |
| R119 | 1-249-423-11 | s | CARBON 3.3K 5% 1/4W |
| R120 | 1-249-423-11 | s | CARBON 3.3K 5% 1/4W |
| R121 | 1-249-423-11 | s | CARBON 3.3K 5% 1/4W |
| R122 | 1-249-421-11 | s | CARBON 2.2K 5% 1/4W |
| R123 | 1-249-429-11 | s | CARBON 10K 5% 1/4W |
| R124 | 1-249-417-11 | s | CARBON 1K 5% 1/4W |
| R125 | 1-215-437-00 | s | METAL 4.7K 1% 1/6W |
| R126 | 1-215-421-00 | s | METAL 1K 1% 1/6W |
| R127 | 1-249-429-11 | s | CARBON 10K 5% 1/4W |
| R128 | 1-249-421-11 | s | CARBON 2.2K 5% 1/4W |
| R129 | 1-249-429-11 | s | CARBON 10K 5% 1/4W |
| R130 | 1-249-429-11 | s | CARBON 10K 5% 1/4W |
| R131 | 1-215-421-00 | s | METAL 1K 1% 1/6W |
| R132 | 1-249-429-11 | s | CARBON 10K 5% 1/4W |
| R133 | 1-249-417-11 | s | CARBON 1K 5% 1/4W |
| R134 | 1-215-437-00 | s | METAL 4.7K 1% 1/6W |
| R135 | 1-249-429-11 | s | CARBON 10K 5% 1/4W |
| R136 | 1-249-421-11 | s | CARBON 2.2K 5% 1/4W |
| R137 | 1-215-437-00 | s | METAL 4.7K 1% 1/6W |
| R138 | 1-249-423-11 | s | CARBON 3.3K 5% 1/4W |
| R139 | 1-249-423-11 | s | CARBON 3.3K 5% 1/4W |
| R140 | 1-249-423-11 | s | CARBON 3.3K 5% 1/4W |
| R141 | 1-249-421-11 | s | CARBON 2.2K 5% 1/4W |
| R142 | 1-249-437-11 | s | CARBON 47K 5% 1/4W |
| R143 | 1-215-445-00 | s | METAL 10K 1% 1/6W |
| R144 | 1-215-481-00 | s | METAL 330K 1% 1/6W |
| R145 | 1-247-883-00 | s | CARBON 150K 5% 1/4W |
| R146 | 1-247-883-00 | s | CARBON 150K 5% 1/4W |
| R147 | 1-249-425-11 | s | CARBON 4.7K 5% 1/4W |
| R148 | 1-215-489-00 | s | METAL 680K 1% 1/6W |
| R149 | 1-215-463-00 | s | METAL 56K 1% 1/6W |
| R150 | 1-215-469-00 | s | METAL 100K 1% 1/6W |
| R151 | 1-215-463-00 | s | METAL 56K 1% 1/6W |
| R152 | 1-215-437-00 | s | METAL 4.7K 1% 1/6W |

(RM-43 BOARD)

| Ref. No. or Q'ty | Part No. | SP | Description |
|---|---|---|---|
| R153 | 1-215-445-00 | s | METAL 10K 1% 1/6W |
| R154 | 1-215-445-00 | s | METAL 10K 1% 1/6W |
| R155 | 1-247-895-00 | s | CARBON 470K 5% 1/4W |
| R156 | 1-249-441-11 | s | CARBON 100K 5% 1/4W |
| R157 | 1-249-433-11 | s | CARBON 22K 5% 1/4W |
| R158 | 1-249-435-11 | s | CARBON 33K 5% 1/4W |
| R159 | 1-215-422-00 | s | METAL 1.1K 1% 1/6W |
| R160 | 1-215-455-00 | s | METAL 27K 1% 1/6W |
| R161 | 1-249-429-11 | s | CARBON 10K 5% 1/4W |
| R162 | 1-215-477-00 | s | METAL 220K 1% 1/6W |
| R163 | 1-215-421-00 | s | METAL 1K 1% 1/6W |
| R164 | 1-215-447-00 | s | METAL 12K 1% 1/6W |
| R165 | 1-215-437-00 | s | METAL 4.7K 1% 1/6W |
| R166 | 1-215-489-00 | s | METAL 680K 1% 1/6W |
| R167 | 1-215-463-00 | s | METAL 56K 1% 1/6W |
| R168 | 1-215-469-00 | s | METAL 100K 1% 1/6W |
| R169 | 1-215-463-00 | s | METAL 56K 1% 1/6W |
| R170 | 1-247-883-00 | s | CARBON 150K 5% 1/4W |
| R171 | 1-247-883-00 | s | CARBON 150K 5% 1/4W |
| R172 | 1-215-445-00 | s | METAL 10K 1% 1/6W |
| R173 | 1-215-481-00 | s | METAL 330K 1% 1/6W |
| R174 | 1-249-421-11 | s | CARBON 2.2K 5% 1/4W |
| R175 | 1-249-437-11 | s | CARBON 47K 5% 1/4W |
| R176 | 1-215-453-00 | s | METAL 22K 1% 1/6W |
| R177 | 1-249-424-11 | s | CARBON 3.9K 5% 1/4W |
| R178 | 1-247-883-00 | s | CARBON 150K 5% 1/4W |
| R179 | 1-215-445-00 | s | METAL 10K 1% 1/6W |
| R180 | 1-215-481-00 | s | METAL 330K 1% 1/6W |
| R181 | 1-247-883-00 | s | CARBON 150K 5% 1/4W |
| R182 | 1-215-453-00 | s | METAL 22K 1% 1/6W |
| R183 | 1-215-453-00 | s | METAL 22K 1% 1/6W |
| R184 | 1-215-435-00 | s | METAL 3.9K 1% 1/6W |
| R185 | 1-215-477-00 | s | METAL 220K 1% 1/6W |
| R186 | 1-249-429-11 | s | CARBON 10K 5% 1/4W |
| R187 | 1-215-468-00 | s | METAL 91K 1% 1/6W |
| R188 | 1-215-447-00 | s | METAL 12K 1% 1/6W |
| R189 | 1-249-436-11 | s | CARBON 39K 5% 1/4W |
| R190 | 1-215-451-00 | s | METAL 18K 1% 1/6W |
| R191 | 1-249-417-11 | s | CARBON 1K 5% 1/4W |
| R192 | 1-215-445-00 | s | METAL 10K 1% 1/6W |
| R193 | 1-215-455-00 | s | METAL 27K 1% 1/6W |
| R194 | 1-249-417-11 | s | CARBON 1K 5% 1/4W |
| R195 | 1-215-443-00 | s | METAL 8.2K 1% 1/6W |
| R196 | 1-215-448-00 | s | METAL 13K 1% 1/6W |
| R197 | 1-215-464-00 | s | METAL 62K 1% 1/6W |
| R198 | 1-215-492-00 | s | METAL 910K 1% 1/6W |
| R199 | 1-215-460-00 | s | METAL 43K 1% 1/6W |
| R200 | 1-215-468-00 | s | METAL 91K 1% 1/6W |
| R201 | 1-215-440-00 | s | METAL 6.2K 1% 1/6W |
| R202 | 1-215-445-00 | s | METAL 10K 1% 1/6W |
| R203 | 1-215-445-00 | s | METAL 10K 1% 1/6W |
| R204 | 1-215-455-00 | s | METAL 27K 1% 1/6W |
| R205 | 1-215-445-00 | s | METAL 10K 1% 1/6W |
| R206 | 1-247-883-00 | s | CARBON 150K 5% 1/4W |
| R207 | 1-247-883-00 | s | CARBON 150K 5% 1/4W |
| R208 | 1-215-445-00 | s | METAL 10K 1% 1/6W |
| R209 | 1-215-481-00 | s | METAL 330K 1% 1/6W |
| R210 | 1-249-424-11 | s | CARBON 3.9K 5% 1/4W |
| R211 | 1-215-477-00 | s | METAL 220K 1% 1/6W |
| R212 | 1-249-424-11 | s | CARBON 3.9K 5% 1/4W |
| R213 | 1-215-453-00 | s | METAL 22K 1% 1/6W |
| R214 | 1-249-411-11 | s | CARBON 330 5% 1/4W |
| R215 | 1-249-429-11 | s | CARBON 10K 5% 1/4W |
| R216 | 1-249-424-11 | s | CARBON 3.9K 5% 1/4W |
| R217 | 1-215-435-00 | s | METAL 3.9K 1% 1/6W |
| R218 | 1-215-477-00 | s | METAL 220K 1% 1/6W |
| R219 | 1-215-468-00 | s | METAL 91K 1% 1/6W |
| R220 | 1-215-451-00 | s | METAL 18K 1% 1/6W |
| R221 | 1-215-447-00 | s | METAL 12K 1% 1/6W |
| R222 | 1-249-436-11 | s | CARBON 39K 5% 1/4W |
| R223 | 1-215-448-00 | s | METAL 13K 1% 1/6W |
| R224 | 1-215-460-00 | s | METAL 43K 1% 1/6W |
| R225 | 1-215-492-00 | s | METAL 910K 1% 1/6W |
| R226 | 1-215-440-00 | s | METAL 6.2K 1% 1/6W |
| R227 | 1-215-468-00 | s | METAL 91K 1% 1/6W |
| R228 | 1-215-443-00 | s | METAL 8.2K 1% 1/6W |
| R229 | 1-215-452-00 | s | METAL 20K 1% 1/6W |
| R230 | 1-215-450-00 | s | METAL 16K 1% 1/6W |
| R231 | 1-215-445-00 | s | METAL 10K 1% 1/6W |
| R232 | 1-215-439-00 | s | METAL 5.6K 1% 1/6W |
| R233 | 1-249-437-11 | s | CARBON 47K 5% 1/4W |
| R234 | 1-249-437-11 | s | CARBON 47K 5% 1/4W |
| R235 | 1-215-438-00 | s | METAL 5.1K 1% 1/6W |
| R236 | 1-249-429-11 | s | CARBON 10K 5% 1/4W |
| R237 | 1-249-429-11 | s | CARBON 10K 5% 1/4W |
| R238 | 1-249-424-11 | s | CARBON 3.9K 5% 1/4W |
| R239 | 1-215-477-00 | s | METAL 220K 1% 1/6W |
| R240 | 1-215-435-00 | s | METAL 3.9K 1% 1/6W |
| R241 | 1-249-411-11 | s | CARBON 330 5% 1/4W |
| R242 | 1-249-425-11 | s | CARBON 4.7K 5% 1/4W |
| R243 | 1-249-437-11 | s | CARBON 47K 5% 1/4W |
| R244 | 1-249-429-11 | s | CARBON 10K 5% 1/4W |
| R245 | 1-249-441-11 | s | CARBON 100K 5% 1/4W |
| R246 | 1-249-428-11 | s | CARBON 8.2K 5% 1/4W |
| R247 | 1-249-421-11 | s | CARBON 2.2K 5% 1/4W |
| R248 | 1-215-464-00 | s | METAL 62K 1% 1/6W |
| R249 | 1-215-452-00 | s | METAL 20K 1% 1/6W |
| R250 | 1-215-450-00 | s | METAL 16K 1% 1/6W |
| R251 | 1-215-445-00 | s | METAL 10K 1% 1/6W |
| R252 | 1-215-438-00 | s | METAL 5.1K 1% 1/6W |
| R253 | 1-215-439-00 | s | METAL 5.6K 1% 1/6W |
| R254 | 1-249-429-11 | s | CARBON 10K 5% 1/4W |
| R255 | 1-215-461-00 | s | METAL 47K 1% 1/6W |
| R256 | 1-215-461-00 | s | METAL 47K 1% 1/6W |
| R257 | 1-249-441-11 | s | CARBON 100K 5% 1/4W |
| R258 | 1-249-425-11 | s | CARBON 4.7K 5% 1/4W |
| R259 | 1-249-437-11 | s | CARBON 47K 5% 1/4W |
| R260 | 1-249-429-11 | s | CARBON 10K 5% 1/4W |
| R261 | 1-215-445-00 | s | METAL 10K 1% 1/6W |
| R262 | 1-215-435-00 | s | METAL 3.9K 1% 1/6W |
| R263 | 1-215-445-00 | s | METAL 10K 1% 1/6W |
| R264 | 1-249-429-11 | s | CARBON 10K 5% 1/4W |
| R265 | 1-249-429-11 | s | CARBON 10K 5% 1/4W |
| R266 | 1-249-429-11 | s | CARBON 10K 5% 1/4W |
| R267 | 1-249-429-11 | s | CARBON 10K 5% 1/4W |
| R268 | 1-249-429-11 | s | CARBON 10K 5% 1/4W |
| R269 | 1-215-461-00 | s | METAL 47K 1% 1/6W |
| R270 | 1-215-461-00 | s | METAL 47K 1% 1/6W |

(RM-43 BOARD)

| Ref. No.<br>or Q'ty | Part No. | SP | Description |
|---|---|---|---|
| R271 | 1-215-445-00 | s | METAL 10K 1% 1/6W |
| R272 | 1-215-435-00 | s | METAL 3.9K 1% 1/6W |
| R273 | 1-215-445-00 | s | METAL 10K 1% 1/6W |
| R274 | 1-249-417-11 | s | CARBON 1K 5% 1/4W |
| R275 | 1-249-421-11 | s | CARBON 2.2K 5% 1/4W |

## SE-49 BOARD

| Ref. No.<br>or Q'ty | Part No. | SP | Description |
|---|---|---|---|
| 2pcs | 7-628-254-40 | s | SCREW +PS 2.6X12 |
| 8pcs | 7-682-948-01 | s | SCREW +PSW 3X8 |
| 2pcs | 7-622-207-05 | s | N 2.6, TYPE 2 |
| CN324 | 1-563-763-11 | o | CONNECTOR, 30P, MALE |
| CN661 | 1-506-796-11 | s | CONNECTOR, D-SUB 15P, FEMALE |
| CN662 | 1-563-323-11 | s | CONNECTOR, D-SUB 9P, FEMALE |
| CN663 | 1-563-323-11 | s | CONNECTOR, D-SUB 9P, FEMALE |
| CN664 | 1-563-323-11 | s | CONNECTOR, D-SUB 9P, FEMALE |
| IC1 | 8-759-008-57 | s | IC MC34051P |
| PS1 | 1-532-637-00 | s | LINK, IC 1.0A |
| PS2 | 1-532-605-00 | s | LINK, IC 0.4A |
| PS3 | 1-532-605-00 | s | LINK, IC 0.4A |
| R1 | 1-249-405-11 | s | CARBON 100 5% 1/4W |
| R2 | 1-249-405-11 | s | CARBON 100 5% 1/4W |
| R3 | 1-249-405-11 | s | CARBON 100 5% 1/4W |
| R4 | 1-249-405-11 | s | CARBON 100 5% 1/4W |
| R5 | 1-249-405-11 | s | CARBON 100 5% 1/4W |
| S1 | 1-516-923-21 | s | SWITCH, DIP 4-CKT |

## SP-01 BOARD

| Ref. No.<br>or Q'ty | Part No. | SP | Description |
|---|---|---|---|
| 1pc | A-4925-185-A | o | SP-01 ASSY |
| 1pc | A-4925-186-A | o | UR-20-C1 ASSY |
| 1pc | A-4925-224-A | o | UR-20-F ASSY |
| C101 | ⚠1-136-185-00 | s | FILM 0.22uF 20% 250V |
| C102 | ⚠1-136-185-00 | s | FILM 0.22uF 20% 250V |
| C103 | ⚠1-136-212-00 | s | FILM 0.1uF 20% AC250V |
| C104 | 1-161-742-00 | s | CERAMIC 0.0022uF 20% 400V |
| C105 | 1-161-742-00 | s | CERAMIC 0.0022uF 20% 400V |
| C106 | 1-161-742-00 | s | CERAMIC 0.0022uF 20% 400V |
| C107 | 1-161-742-00 | s | CERAMIC 0.0022uF 20% 400V |
| C108 | 1-161-742-00 | s | CERAMIC 0.0022uF 20% 400V |
| C109 | 1-161-742-00 | s | CERAMIC 0.0022uF 20% 400V |
| C110 | 1-161-742-00 | s | CERAMIC 0.0022uF 20% 400V |
| C111 | 1-161-742-00 | s | CERAMIC 0.0022uF 20% 400V |
| C112 | 1-125-470-11 | s | ELECT 560uF 20% 400V |
| C113 | 1-125-470-11 | s | ELECT 560uF 20% 400V |
| C114 | 1-136-201-11 | s | FILM 0.22uF 5% 400V |
| C115 | 1-136-201-11 | s | FILM 0.22uF 5% 400V |
| C116 | 1-125-352-00 | s | ELECT 180uF 400V |
| C117 | 1-161-741-00 | s | CERAMIC 1000PF 20% AC400V |
| C119 | 1-161-741-00 | s | CERAMIC 1000PF 20% AC400V |
| C120 | 1-161-741-00 | s | CERAMIC 1000PF 20% AC400V |
| C121 | 1-130-772-00 | s | FILM 0.22uF 5% 63V |
| C122 | 1-130-772-00 | s | FILM 0.22uF 5% 63V |
| C123 | 1-161-925-00 | s | CERAMIC 100PF 10% 500V |
| C124 | 1-161-925-00 | s | CERAMIC 100PF 10% 500V |
| C125 | 1-126-104-11 | s | ELECT 470uF 20% 35V |
| C127 | 1-124-443-11 | s | ELECT 100uF 20% 10V |
| C128 | 1-123-659-00 | s | ELECT 4.7uF 20% 250V |
| C129 | 1-123-659-00 | s | ELECT 4.7uF 20% 250V |
| C201 | 1-161-915-00 | s | CERAMIC 1000PF 10% 500V |
| C202 | 1-161-915-00 | s | CERAMIC 1000PF 10% 500V |
| C203 | 1-161-925-00 | s | CERAMIC 100PF 10% 500V |
| C204 | 1-161-925-00 | s | CERAMIC 100PF 10% 500V |
| C205 | 1-161-925-00 | s | CERAMIC 100PF 10% 500V |
| C206 | 1-161-925-00 | s | CERAMIC 100PF 10% 500V |
| C207 | 1-161-925-00 | s | CERAMIC 100PF 10% 500V |
| C208 | 1-161-925-00 | s | CERAMIC 100PF 10% 500V |
| C209 | 1-161-925-00 | s | CERAMIC 100PF 10% 500V |
| C210 | 1-161-925-00 | s | CERAMIC 100PF 10% 500V |
| C212 | 1-161-925-00 | s | CERAMIC 100PF 10% 500V |
| C213 | 1-161-925-00 | s | CERAMIC 100PF 10% 500V |
| C214 | 1-124-527-11 | s | ELECT 8200uF 20% 6.3V |
| C215 | 1-124-527-11 | s | ELECT 8200uF 20% 6.3V |
| C216 | 1-124-527-11 | s | ELECT 8200uF 20% 6.3V |
| C217 | 1-124-527-11 | s | ELECT 8200uF 20% 6.3V |
| C218 | 1-124-527-11 | s | ELECT 8200uF 20% 6.3V |
| C219 | 1-124-568-00 | s | ELECT 4700uF 20% 10V |
| C220 | 1-124-520-11 | s | ELECT 3300uF 20% 10V |
| C221 | 1-124-630-11 | s | ELECT 1500uF 20% 25V |
| C222 | 1-124-630-11 | s | ELECT 1500uF 20% 25V |
| C224 | 1-136-169-00 | s | MYLAR 0.22uF 5% 50V |
| C227 | 1-136-165-00 | s | FILM 0.1uF 5% 50V |
| C228 | 1-136-161-00 | s | FILM 0.047uF 5% 50V |
| C229 | 1-136-153-00 | s | FILM 0.01uF 5% 50V |
| C230 | 1-136-153-00 | s | FILM 0.01uF 5% 50V |
| C231 | 1-126-176-11 | s | ELECT 220uF 20% 10V |
| C232 | 1-136-153-00 | s | FILM 0.01uF 5% 50V |

(SP-01 BOARD)

| Ref. No. or Q'ty | Part No. | SP | Description |
|---|---|---|---|
| C233 | 1-136-153-00 | s | FILM 0.01uF 5% 50V |
| C235 | 1-126-104-11 | s | ELECT 470uF 20% 35V |
| C236 | 1-107-164-00 | s | MICA 51PF 5% 500V |
| C237 | 1-124-443-11 | s | ELECT 100uF 20% 10V |
| C238 | 1-161-911-11 | s | CERAMIC 470PF 10% 500V |
| C239 | 1-136-165-00 | s | FILM 0.1uF 5% 50V |
| C241 | 1-136-165-00 | s | FILM 0.1uF 5% 50V |
| C242 | 1-126-104-11 | s | ELECT 470uF 20% 35V |
| C243 | 1-136-153-00 | s | FILM 0.01uF 5% 50V |
| C244 | 1-136-165-00 | s | FILM 0.1uF 5% 50V |
| CN101 | 1-560-176-00 | o | CONNECTOR, 2P, MALE |
| CN102 | 1-560-176-00 | o | CONNECTOR, 2P, MALE |
| CN201F | 1-509-985-00 | o | HOUSING, IL 4P |
| | 1-560-298-00 | o | CONTACT, FEMALE AWG22-28 |
| CN202 | 1-560-304-00 | o | CONNECTOR, IL 8P, MALE |
| CN203 | 1-560-305-00 | o | CONNECTOR, IL 10P, MALE |
| CN901 | 1-560-888-00 | o | CONNECTOR, 3P MALE |
| CN902 | 1-564-908-11 | o | CONNECTOR, MIC 13P MALE |
| D101 | 8-719-500-27 | s | DIODE S15VB60 |
| D102 | 8-719-104-07 | s | DIODE F114F |
| D103 | 8-719-104-07 | s | DIODE F114F |
| D104 | 8-719-902-42 | s | DIODE ESAC33-02CV-F1 |
| D105 | 8-719-110-63 | s | DIODE RD24ESB3 |
| D106 | 8-719-911-19 | s | DIODE 1SS119 |
| D107 | 8-719-911-19 | s | DIODE 1SS119 |
| D108 | 8-719-109-72 | s | DIODE RD3.9ES-B2 |
| D109 | 8-719-981-00 | s | DIODE ERC81-004 |
| D110 | 8-719-911-19 | s | DIODE 1SS119 |
| D111 | 8-719-981-00 | s | DIODE ERC81-004 |
| D112 | 8-719-911-19 | s | DIODE 1SS119 |
| D201 | 8-719-903-46 | s | DIODE ESAD85-009 |
| D202 | 8-719-903-46 | s | DIODE ESAD85-009 |
| D203 | 8-719-901-90 | s | DIODE ESAC33-02N |
| D204 | 8-719-301-20 | s | DIODE CTG-23S |
| D205 | 8-719-301-20 | s | DIODE CTG-23S |
| D206 | 8-719-110-57 | s | DIODE RD22ES-B2 |
| D207 | 8-719-110-63 | s | DIODE RD24ESB3 |
| D208 | 8-719-110-17 | s | DIODE RD10ES-B2 |
| D209 | 8-719-911-19 | s | DIODE 1SS119 |
| D210 | 8-719-313-21 | s | LED, SEL1321G, GRN |
| D211 | 8-719-110-08 | s | DIODE RD8.2ES-B2 |
| D212 | 8-719-911-19 | s | DIODE 1SS119 |
| D213 | 8-719-911-19 | s | DIODE 1SS119 |
| D214 | 8-719-911-19 | s | DIODE 1SS119 |
| D215 | 8-719-911-19 | s | DIODE 1SS119 |
| D216 | 8-719-911-19 | s | DIODE 1SS119 |
| D217 | 8-719-313-21 | s | LED, SEL1321G, GRN |
| D218 | 8-719-911-19 | s | DIODE 1SS119 |
| D219 | 8-719-911-19 | s | DIODE 1SS119 |
| D220 | 8-719-911-19 | s | DIODE 1SS119 |
| D221 | 8-719-110-78 | s | DIODE RD33ES-B2 |
| D222 | 8-719-110-78 | s | DIODE RD33ES-B2 |
| D223 | 8-719-200-02 | s | DIODE 10E2 |
| D224 | 8-719-104-07 | s | DIODE F114F |
| D225 | 8-719-911-19 | s | DIODE 1SS119 |
| D226 | 8-719-911-19 | s | DIODE 1SS119 |
| D227 | 8-719-911-19 | s | DIODE 1SS119 |
| F101 | ⚠1-532-496-00 | s | FUSE, THERMAL 109-DEG-C 10A 250V |

(SP-01 BOARD)

| Ref. No. or Q'ty | Part No. | SP | Description |
|---|---|---|---|
| IC101 | 8-759-604-39 | s | IC M5F78M12 |
| IC102 | 1-807-814-11 | s | IC B-5272 |
| IC201 | 8-759-135-80 | s | IC UPC358C |
| IC202 | 8-759-914-44 | s | IC TL431CLPB |
| IC203 | 8-759-135-80 | s | IC UPC358C |
| IC204 | 8-759-914-44 | s | IC TL431CLPB |
| IC205 | 8-759-914-44 | s | IC TL431CLPB |
| IC206 | 8-759-914-44 | s | IC TL431CLPB |
| IC207 | 8-759-208-17 | s | IC TC4528BPHB |
| L101 | 1-421-507-11 | s | COIL, CHOKE 96uH |
| L102 | 1-421-507-11 | s | COIL, CHOKE 96uH |
| L103 | ⚠1-421-534-00 | s | TRANSFORMER, LINE FILTER |
| L104 | 1-421-468-00 | s | TRANSFORMER, LINE FILTER |
| L105 | 1-421-557-11 | s | COIL, CHOKE 4.4mmH |
| L106 | 1-421-683-11 | s | COIL, CHOKE 5.6uH |
| L107 | 1-421-683-11 | s | COIL, CHOKE 5.6uH |
| L201 | 1-421-533-00 | s | COIL, CHOKE |
| L202 | 1-421-506-00 | s | COIL, CHOKE 6.2uH |
| L203 | 1-421-506-00 | s | COIL, CHOKE 6.2uH |
| L204 | A-4935-008-A | s | COIL, CHOKE |
| L205 | A-4935-009-A | s | COIL, CHOKE |
| L206 | A-4935-009-A | s | COIL, CHOKE |
| L207 | 1-410-470-11 | s | INDUCTOR 10uH |
| L208 | 1-410-470-11 | s | INDUCTOR 10uH |
| PS101 | ⚠1-532-675-21 | s | LINK, IC 1.5A |
| PS102 | 1-532-605-00 | s | LINK, IC 0.4A |
| PS201 | ⚠1-532-605-00 | s | LINK, IC 0.4A |
| PS202 | ⚠1-532-675-21 | s | LINK, IC 1.5A |
| PS203 | ⚠1-532-675-21 | s | LINK, IC 1.5A |
| Q101 | 8-729-300-50 | s | TRANSISTOR 2SC2307-Y |
| Q102 | 8-729-300-50 | s | TRANSISTOR 2SC2307-Y |
| Q103 | 8-729-177-33 | s | TRANSISTOR 2SD773-4 |
| Q104 | 8-729-177-33 | s | TRANSISTOR 2SD773-4 |
| Q201 | 8-729-331-53 | s | TRANSISTOR 2SC2315 |
| Q202 | 8-729-206-05 | s | TRANSISTOR 2SA1328-0 |
| Q203 | 8-729-119-78 | s | TRANSISTOR 2SC2603-E |
| Q204 | 8-729-331-53 | s | TRANSISTOR 2SC2315 |
| Q205 | 8-729-119-76 | s | TRANSISTOR 2SA1115P |
| Q206 | 8-729-331-53 | s | TRANSISTOR 2SC2315 |
| Q207 | 8-729-119-76 | s | TRANSISTOR 2SA1115P |
| Q208 | 8-729-119-78 | s | TRANSISTOR 2SC2603-E |
| Q209 | 8-729-401-67 | s | TRANSISTOR 2SD1271-P |
| Q210 | 8-729-119-76 | s | TRANSISTOR 2SA1115P |
| Q211 | 8-729-119-78 | s | TRANSISTOR 2SC2603-E |
| Q212 | 8-729-119-76 | s | TRANSISTOR 2SA1115P |
| Q213 | 8-729-119-78 | s | TRANSISTOR 2SC2603-E |
| Q214 | 8-729-208-04 | s | TRANSISTOR 2SK422 |
| Q215 | 8-729-208-04 | s | TRANSISTOR 2SK422 |
| Q216 | 8-729-119-76 | s | TRANSISTOR 2SA1115P |
| R101 | ⚠1-205-916-11 | s | WIREWOUND 5.0 5% 20W |
| R102 | ⚠1-205-916-11 | s | WIREWOUND 5.0 5% 20W |
| R103 | 1-249-483-11 | s | CARBON 5.6 5% 1/2W |
| R104 | 1-249-483-11 | s | CARBON 5.6 5% 1/2W |
| R105 | 1-249-417-11 | s | CARBON 1K 5% 1/4W |
| R106 | 1-249-425-11 | s | CARBON 4.7K 5% 1/4W |
| R107 | ⚠1-212-881-11 | s | RES, FUSIBLE 100 1/4W |
| R108 | ⚠1-212-881-11 | s | RES, FUSIBLE 100 1/4W |
| R201 | 1-205-624-00 | s | WIREWOUND 100 5% 5W |

(SP-01 BOARD)

| Ref. No. or Q'ty | Part No. | SP | Description |
|---|---|---|---|
| R202 | 1-249-423-11 | s | CARBON 3.3K 5% 1/4W |
| R203 | 1-205-657-00 | s | WIREWOUND 150 5% 5W |
| R204 | 1-249-429-11 | s | CARBON 10K 5% 1/4W |
| R205 | 1-249-417-11 | s | CARBON 1K 5% 1/4W |
| R206 | 1-216-432-00 | s | METAL 820 5% 1W |
| R207 | 1-249-441-11 | s | CARBON 100K 5% 1/4W |
| R208 | 1-249-432-00 | s | CARBON 18K 5% 1/4W |
| R209 | 1-249-385-11 | s | CARBON 2.2 5% 1/4W |
| R210 | 1-249-425-11 | s | CARBON 4.7K 5% 1/4W |
| R211 | 1-249-425-11 | s | CARBON 4.7K 5% 1/4W |
| R213 | 1-249-419-11 | s | CARBON 1.5K 5% 1/4W |
| R215 | 1-249-405-11 | s | CARBON 100 5% 1/4W |
| R218 | 1-249-405-11 | s | CARBON 100 5% 1/4W |
| R219 | 1-249-417-11 | s | CARBON 1K 5% 1/4W |
| R220 | 1-249-417-11 | s | CARBON 1K 5% 1/4W |
| R221 | 1-249-429-11 | s | CARBON 10K 5% 1/4W |
| R222 | 1-247-703-11 | s | CARBON 180 5% 1/4W |
| R223 | 1-249-425-11 | s | CARBON 4.7K 5% 1/4W |
| R224 | 1-249-417-11 | s | CARBON 1K 5% 1/4W |
| R225 | 1-249-423-11 | s | CARBON 3.3K 5% 1/4W |
| R226 | 1-247-708-11 | s | CARBON 470 5% 1/4W |
| R227 | 1-249-423-11 | s | CARBON 3.3K 5% 1/4W |
| R228 | 1-205-731-11 | s | WIREWOUND 12 5% 5W |
| R229 | 1-249-422-11 | s | CARBON 2.7K 5% 1/4W |
| R230 | 1-249-431-11 | s | CARBON 15K 5% 1/4W |
| R231 | 1-249-424-11 | s | CARBON 3.9K 5% 1/4W |
| R232 | 1-249-435-11 | s | CARBON 33K 5% 1/4W |
| R233 | 1-247-727-11 | s | CARBON 10 5% 1/2W |
| R234 | 1-249-423-11 | s | CARBON 3.3K 5% 1/4W |
| R235 | 1-247-887-00 | s | CARBON 220K 5% 1/4W |
| R236 | 1-249-425-11 | s | CARBON 4.7K 5% 1/4W |
| R237 | 1-249-410-11 | s | CARBON 270 5% 1/4W |
| R238 | 1-249-420-11 | s | CARBON 1.8K 5% 1/4W |
| R239 | 1-249-421-11 | s | CARBON 2.2K 5% 1/4W |
| R240 | 1-249-405-11 | s | CARBON 100 5% 1/4W |
| R241 | 1-249-421-11 | s | CARBON 2.2K 5% 1/4W |
| R242 | 1-247-881-00 | s | CARBON 120K 5% 1/4W |
| R243 | 1-249-421-11 | s | CARBON 2.2K 5% 1/4W |
| R244 | 1-535-369-00 | s | RES, SHUNT 0.02 5% 2W |
| R245 | 1-249-421-11 | s | CARBON 2.2K 5% 1/4W |
| R246 | 1-249-431-11 | s | CARBON 15K 5% 1/4W |
| R247 | 1-249-431-11 | s | CARBON 15K 5% 1/4W |
| R248 | 1-249-435-11 | s | CARBON 33K 5% 1/4W |
| R249 | 1-247-708-11 | s | CARBON 470 5% 1/4W |
| R250 | 1-249-482-11 | s | CARBON 4.7 5% 1/2W |
| R251 | 1-205-652-00 | s | WIREWOUND 68 5% 5W |
| R252 | 1-205-652-00 | s | WIREWOUND 68 5% 5W |
| R253 | 1-205-652-00 | s | WIREWOUND 68 5% 5W |
| R254 | 1-249-417-11 | s | CARBON 1K 5% 1/4W |
| R255 | 1-249-421-11 | s | CARBON 2.2K 5% 1/4W |
| R256 | 1-249-425-11 | s | CARBON 4.7K 5% 1/4W |
| R257 | 1-249-437-11 | s | CARBON 47K 5% 1/4W |
| R258 | 1-249-429-11 | s | CARBON 10K 5% 1/4W |
| R259 | 1-249-433-11 | s | CARBON 22K 5% 1/4W |
| R260 | 1-249-405-11 | s | CARBON 100 5% 1/4W |
| R261 | 1-249-431-11 | s | CARBON 15K 5% 1/4W |
| R262 | 1-249-433-11 | s | CARBON 22K 5% 1/4W |
| R263 | 1-247-903-00 | s | CARBON 1M 5% 1/4W |
| R264 | 1-249-417-11 | s | CARBON 1K 5% 1/4W |

(SP-01 BOARD)

| Ref. No. or Q'ty | Part No. | SP | Description |
|---|---|---|---|
| R265 | 1-249-425-11 | s | CARBON 4.7K 5% 1/4W |
| R266 | 1-249-425-11 | s | CARBON 4.7K 5% 1/4W |
| R267 | 1-249-425-11 | s | CARBON 4.7K 5% 1/4W |
| R269 | 1-249-441-11 | s | CARBON 100K 5% 1/4W |
| R271 | 1-249-437-11 | s | CARBON 47K 5% 1/4W |
| R272 | 1-247-752-11 | s | CARBON 1K 5% 1/2W |
| R273 | 1-205-625-00 | s | WIREWOUND 220 5% 5W |
| R274 | 1-249-405-11 | s | CARBON 100 5% 1/4W |
| R275 | 1-205-731-11 | s | WIREWOUND 12 5% 5W |
| R276 | 1-249-425-11 | s | CARBON 4.7K 5% 1/4W |
| R277 | 1-205-748-00 | s | WIREWOUND 22 5% 5W |
| R278 | 1-249-429-11 | s | CARBON 10K 5% 1/4W |
| R279 | 1-249-429-11 | s | CARBON 10K 5% 1/4W |
| R280 | 1-249-429-11 | s | CARBON 10K 5% 1/4W |
| R281 | 1-249-405-11 | s | CARBON 100 5% 1/4W |
| R282 | 1-249-405-11 | s | CARBON 100 5% 1/4W |
| R283 | 1-249-425-11 | s | CARBON 4.7K 5% 1/4W |
| R284 | 1-249-425-11 | s | CARBON 4.7K 5% 1/4W |
| R285 | 1-249-423-11 | s | CARBON 3.3K 5% 1/4W |
| R286 | 1-249-429-11 | s | CARBON 10K 5% 1/4W |
| R287 | 1-249-425-11 | s | CARBON 4.7K 5% 1/4W |
| RV201 | 1-228-990-00 | s | RES, ADJ, METAL 1K |
| RV202 | 1-237-515-21 | s | RES, ADJ, METAL 1K |
| RV203 | 1-237-515-21 | s | RES, ADJ, METAL 1K |
| RY101 | 1-515-701-11 | s | RELAY |
| T101 | ⚠A-4935-013-A | s | TRANSFORMER, CONVERTER |
| T102 | ⚠1-421-819-11 | s | TRANSFORMER, CURRENT |
| T103 | ⚠1-437-187-11 | s | TRANSFORMER, DRIVE |
| T104 | ⚠1-437-187-11 | s | TRANSFORMER, DRIVE |
| T105 | 1-448-406-11 | s | TRANSFORMER, CONVERTER |
| T106 | A-4935-010-A | s | TRANSFORMER, PULSE |
| T201 | A-4935-011-A | s | TRANSFORMER, CONVERTER |
| T202 | A-4935-012-A | s | TRANSFORMER, PULSE |
| TS201 | 1-570-258-51 | s | SWITCH, THERMAL 100-DEG-C |
| TS202 | 1-570-258-61 | s | SWITCH, THERMAL 110-DEG-C |

## SP-02 BOARD

| Ref. No. or Q'ty | Part No. | SP | Description |
|---|---|---|---|
| 1pc | A-4925-187-A | o | SP-02 ASSY |
| 1pc | A-4925-188-A | o | UR-20-C4 ASSY |
| 1pc | A-4925-189-A | o | UR-20-C6 ASSY |
| C101 | 1-125-470-11 | s | ELECT 560uF 20% 400V |
| C102 | 1-136-201-00 | s | FILM 0.22uF 5% 400V |
| C103 | 1-125-470-11 | s | ELECT 560uF 20% 400V |
| C104 | 1-123-659-00 | s | ELECT 4.7uF 20% 250V |
| C105 | 1-123-659-00 | s | ELECT 4.7uF 20% 250V |
| C106 | 1-130-772-00 | s | FILM 0.22uF 5% 63V |
| C107 | 1-130-772-00 | s | FILM 0.22uF 5% 63V |
| C108 | ⚠1-161-741-00 | s | CERAMIC 1000PF 20% AC400V |
| C109 | ⚠1-161-741-00 | s | CERAMIC 1000PF 20% AC400V |
| C111 | ⚠1-161-741-00 | s | CERAMIC 1000PF 20% AC400V |
| C112 | 1-136-201-11 | s | FILM 0.22uF 5% 400V |
| C201 | 1-161-911-11 | s | CERAMIC 470PF 10% 500V |
| C202 | 1-161-911-11 | s | CERAMIC 470PF 10% 500V |
| C203 | 1-124-603-11 | s | ELECT 390uF 20% 100V |
| C204 | 1-124-603-11 | s | ELECT 390uF 20% 100V |
| C205 | 1-124-603-11 | s | ELECT 390uF 20% 100V |
| C206 | 1-124-603-11 | s | ELECT 390uF 20% 100V |
| C207 | 1-124-603-11 | s | ELECT 390uF 20% 100V |
| C209 | 1-136-157-00 | s | FILM 0.022uF 5% 50V |
| C210 | 1-124-603-11 | s | ELECT 390uF 20% 100V |
| C212 | 1-136-157-00 | s | FILM 0.022uF 5% 50V |
| C213 | 1-124-603-11 | s | ELECT 390uF 20% 100V |
| C215 | 1-136-157-00 | s | FILM 0.022uF 5% 50V |
| C216 | 1-124-603-11 | s | ELECT 390uF 20% 100V |
| C218 | 1-136-157-00 | s | FILM 0.022uF 5% 50V |
| C219 | 1-136-165-00 | s | FILM 0.1uF 5% 50V |
| C220 | 1-136-165-00 | s | FILM 0.1uF 5% 50V |
| C221 | 1-124-659-00 | s | ELECT, NONPOLAR 33uF 20% 50V |
| C222 | 1-136-165-00 | s | FILM 0.1uF 5% 50V |
| C223 | 1-136-165-00 | s | FILM 0.1uF 5% 50V |
| C224 | 1-136-165-00 | s | FILM 0.1uF 5% 50V |
| C225 | 1-136-165-00 | s | FILM 0.1uF 5% 50V |
| C226 | 1-136-165-00 | s | FILM 0.1uF 5% 50V |
| C227 | 1-106-220-00 | s | MYLAR 0.1uF 50% 100V |
| C228 | 1-136-165-00 | s | FILM 0.1uF 5% 50V |
| C231 | 1-124-499-11 | s | ELECT, NONPOLAR 1uF 20% 50V |
| C232 | 1-136-165-00 | s | FILM 0.1uF 5% 50V |
| C234 | 1-136-161-00 | s | FILM 0.047uF 5% 50V |
| C235 | 1-136-153-00 | s | FILM 0.01uF 5% 50V |
| C246 | 1-136-165-00 | s | FILM 0.1uF 5% 50V |
| C247 | 1-130-834-00 | s | FILM 1uF 5% 63V |
| C249 | 1-136-165-00 | s | FILM 0.1uF 5% 50V |
| C250 | 1-130-834-00 | s | FILM 1uF 5% 63V |
| C252 | 1-136-165-00 | s | FILM 0.1uF 5% 50V |
| C253 | 1-130-834-00 | s | FILM 1uF 5% 63V |
| C255 | 1-136-165-00 | s | FILM 0.1uF 5% 50V |
| C256 | 1-130-834-00 | s | FILM 1uF 5% 63V |
| C258 | 1-136-165-00 | s | FILM 0.1uF 5% 50V |
| C260 | 1-136-153-00 | s | FILM 0.01uF 5% 50V |
| C261 | 1-136-153-00 | s | FILM 0.01uF 5% 50V |
| C262 | 1-136-153-00 | s | FILM 0.01uF 5% 50V |
| C263 | 1-136-153-00 | s | FILM 0.01uF 5% 50V |
| CN103 | 1-560-176-00 | o | CONNECTOR, 2P, MALE |
| CN204 | 1-560-304-00 | o | CONNECTOR, IL 8P, MALE |
| CN205F | 1-509-985-00 | o | HOUSING, IL 3P |
|  | 1-560-298-00 | o | CONTACT, FEMALE AWG22-28 |

(SP-02 BOARD)

| Ref. No. or Q'ty | Part No. | SP | Description |
|---|---|---|---|
| CN205M | 1-560-301-00 | o | CONNECTOR, IL 4P, MALE |
| CN209 | 1-560-300-00 | o | CONNECTOR, IL 3P, MALE |
| CN903 | 1-560-312-00 | o | CONNECTOR, IL 6P MALE |
| CN904 | 1-560-310-00 | o | CONNECTOR, IL 4P, MALE |
| CN905 | 1-564-906-11 | o | CONNECTOR, MIC 5P MALE |
| D101 | 8-719-104-07 | s | DIODE F114F |
| D102 | 8-719-104-07 | s | DIODE F114F |
| D103 | 8-719-981-00 | s | DIODE ERC81-004 |
| D104 | 8-719-911-19 | s | DIODE 1SS119 |
| D105 | 8-719-981-00 | s | DIODE ERC81-004 |
| D106 | 8-719-911-19 | s | DIODE 1SS119 |
| D201 | 8-719-300-52 | s | DIODE CTU-38R |
| D202 | 8-719-300-53 | s | DIODE CTU-38S |
| D203 | 8-719-300-29 | s | DIODE CTG-31S |
| D204 | 8-719-908-06 | s | DIODE ERA81-005 |
| D205 | 8-719-300-29 | s | DIODE CTG-31S |
| D206 | 8-719-908-06 | s | DIODE ERA81-005 |
| D207 | 8-719-300-29 | s | DIODE CTG-31S |
| D208 | 8-719-908-06 | s | DIODE ERA81-005 |
| D209 | 8-719-300-29 | s | DIODE CTG-31S |
| D210 | 8-719-908-06 | s | DIODE ERA81-005 |
| D211 | 8-719-908-06 | s | DIODE ERA81-005 |
| D212 | 8-719-908-06 | s | DIODE ERA81-005 |
| D213 | 8-719-908-06 | s | DIODE ERA81-005 |
| D214 | 8-719-908-06 | s | DIODE ERA81-005 |
| D215 | 8-719-110-78 | s | DIODE RD33ES-B2 |
| D216 | 8-719-110-78 | s | DIODE RD33ES-B2 |
| D217 | 8-719-109-89 | s | DIODE RD5.6ES-B2 |
| D218 | 8-719-911-19 | s | DIODE 1SS119 |
| D219 | 8-719-300-33 | s | DIODE RU-3AM |
| D220 | 8-719-913-44 | s | DIODE ERA82-004 |
| D221 | 8-719-913-44 | s | DIODE ERA82-004 |
| D222 | 8-719-913-44 | s | DIODE ERA82-004 |
| D223 | 8-719-913-44 | s | DIODE ERA82-004 |
| D224 | 8-719-913-44 | s | DIODE ERA82-004 |
| D225 | 8-719-913-44 | s | DIODE ERA82-004 |
| D226 | 8-719-913-44 | s | DIODE ERA82-004 |
| D227 | 8-719-913-44 | s | DIODE ERA82-004 |
| D228 | 8-719-110-14 | s | DIODE RD9.1ESB3 |
| D229 | 8-719-109-89 | s | DIODE RD5.6ES-B2 |
| D230 | 8-719-000-06 | s | DIODE MC921 |
| D231 | 8-719-911-19 | s | DIODE 1SS119 |
| D232 | 8-719-911-19 | s | DIODE 1SS119 |
| D233 | 8-719-000-06 | s | DIODE MC921 |
| D234 | 8-719-911-19 | s | DIODE 1SS119 |
| D235 | 8-719-911-19 | s | DIODE 1SS119 |
| D236 | 8-719-000-06 | s | DIODE MC921 |
| D238 | 8-719-110-61 | s | DIODE RD24ESB1 |
| D239 | 8-719-110-61 | s | DIODE RD24ESB1 |
| IC201 | 8-759-135-80 | s | IC UPC358C |
| IC202 | 8-759-914-44 | s | IC TL431CLPB |
| IC203 | 8-759-135-80 | s | IC UPC358C |
| IC204 | 8-759-135-80 | s | IC UPC358C |
| IC205 | 8-719-124-11 | s | IC PS2401-1 |
| IC206 | 8-759-914-44 | s | IC TL431CLPB |
| IC207 | 8-759-914-44 | s | IC TL431CLPB |
| IC208 | 8-759-914-44 | s | IC TL431CLPB |
| IC209 | 8-759-914-44 | s | IC TL431CLPB |

(SP-02 BOARD)

| Ref. No.<br>or Q'ty | Part No. | SP | Description |
|---|---|---|---|
| L101 | 1-421-470-21 | s | TRANSFORMER, LINE FILTER |
| L102 | 1-421-683-11 | s | COIL, CHOKE 5.6uH |
| L103 | 1-421-683-11 | s | COIL, CHOKE 5.6uH |
| L201 | A-4935-014-A | s | COIL, CHOKE |
| L202 | 1-421-329-00 | s | COIL, CHOKE |
| L203 | 1-421-540-00 | s | COIL, CHOKE |
| L204 | 1-421-329-00 | s | COIL, CHOKE |
| L205 | 1-421-622-11 | s | TRANSFORMER, LINE FILTER |
| L206 | 1-421-540-00 | s | COIL, CHOKE |
| L207 | 1-421-329-00 | s | COIL, CHOKE |
| L208 | 1-421-622-11 | s | TRANSFORMER, LINE FILTER |
| L209 | 1-421-540-00 | s | COIL, CHOKE |
| L210 | 1-421-329-00 | s | COIL, CHOKE |
| L211 | 1-421-622-11 | s | TRANSFORMER, LINE FILTER |
| L212 | 1-421-540-00 | s | COIL, CHOKE |
| L213 | 1-421-329-00 | s | COIL, CHOKE |
| L214 | 1-421-622-11 | s | TRANSFORMER, LINE FILTER |
| L215 | 1-410-470-11 | s | INDUCTOR 10uH |
| Q101 | 8-729-300-50 | s | TRANSISTOR 2SC2307-Y |
| Q102 | 8-729-177-33 | s | TRANSISTOR 2SD773-4 |
| Q103 | 8-729-300-50 | s | TRANSISTOR 2SC2307-Y |
| Q104 | 8-729-177-33 | s | TRANSISTOR 2SD773-4 |
| Q201 | 8-729-906-51 | s | TRANSISTOR 2SC2944-02 |
| Q202 | 8-729-177-42 | s | TRANSISTOR 2SD774-3 |
| Q203 | 8-729-906-51 | s | TRANSISTOR 2SC2944-02 |
| Q204 | 8-729-177-42 | s | TRANSISTOR 2SD774-3 |
| Q205 | 8-729-906-51 | s | TRANSISTOR 2SC2944-02 |
| Q206 | 8-729-177-42 | s | TRANSISTOR 2SD774-3 |
| Q207 | 8-729-906-51 | s | TRANSISTOR 2SC2944-02 |
| Q208 | 8-729-177-42 | s | TRANSISTOR 2SD774-3 |
| Q209 | 8-729-206-05 | s | TRANSISTOR 2SA1328-0 |
| Q210 | 8-729-900-80 | s | TRANSISTOR DTC114ES |
| Q211 | 8-729-900-80 | s | TRANSISTOR DTC114ES |
| Q212 | 8-729-900-80 | s | TRANSISTOR DTC114ES |
| Q213 | 8-729-900-61 | s | TRANSISTOR DTA114ES |
| Q214 | 8-729-900-61 | s | TRANSISTOR DTA114ES |
| R101 | 1-249-483-11 | s | CARBON 5.6 5% 1/2W |
| R102 | ⚠1-212-881-11 | s | RES, FUSIBLE 100 1/4W |
| R103 | 1-249-483-11 | s | CARBON 5.6 5% 1/2W |
| R104 | ⚠1-212-881-11 | s | RES, FUSIBLE 100 1/4W |
| R201 | 1-205-625-00 | s | WIREWOUND 220 5% 5W |
| R202 | 1-205-917-31 | s | WIREWOUND 1K 5% 20W |
| R203 | 1-205-624-00 | s | WIREWOUND 100 5% 5W |
| R205 | 1-214-766-00 | s | METAL 36K 1% 1/4W |
| R206 | 1-249-447-11 | s | CARBON 1 5% 1/4W |
| R207 | 1-247-700-11 | s | CARBON 100 5% 1/4W |
| R208 | 1-205-623-00 | s | WIREWOUND 47 5% 5W |
| R209 | 1-214-766-00 | s | METAL 36K 1% 1/4W |
| R210 | 1-249-447-11 | s | CARBON 1 5% 1/4W |
| R211 | 1-247-700-11 | s | CARBON 100 5% 1/4W |
| R212 | 1-205-623-00 | s | WIREWOUND 47 5% 5W |
| R213 | 1-249-447-11 | s | CARBON 1 5% 1/4W |
| R214 | 1-247-700-11 | s | CARBON 100 5% 1/4W |
| R215 | 1-205-623-00 | s | WIREWOUND 47 5% 5W |
| R216 | 1-249-447-11 | s | CARBON 1 5% 1/4W |
| R217 | 1-247-700-11 | s | CARBON 100 5% 1/4W |
| R218 | 1-205-623-00 | s | WIREWOUND 47 5% 5W |
| R219 | 1-249-484-11 | s | CARBON 6.8 5% 1/2W |

(SP-02 BOARD)

| Ref. No.<br>or Q'ty | Part No. | SP | Description |
|---|---|---|---|
| R220 | 1-249-415-11 | s | CARBON 680 5% 1/4W |
| R221 | 1-249-420-11 | s | CARBON 1.8K 5% 1/4W |
| R222 | 1-249-425-11 | s | CARBON 4.7K 5% 1/4W |
| R223 | 1-249-425-11 | s | CARBON 4.7K 5% 1/4W |
| R224 | 1-215-869-11 | s | METAL 1.0K 5% 1W |
| R225 | 1-249-429-11 | s | CARBON 10K 5% 1/4W |
| R226 | 1-249-417-11 | s | CARBON 1K 5% 1/4W |
| R227 | 1-249-429-11 | s | CARBON 10K 5% 1/4W |
| R228 | 1-249-419-11 | s | CARBON 1.5K 5% 1/4W |
| R229 | 1-249-421-11 | s | CARBON 2.2K 5% 1/4W |
| R231 | 1-249-439-11 | s | CARBON 68K 5% 1/4W |
| R232 | 1-249-417-11 | s | CARBON 1K 5% 1/4W |
| R233 | 1-249-417-11 | s | CARBON 1K 5% 1/4W |
| R234 | 1-249-439-11 | s | CARBON 68K 5% 1/4W |
| R235 | 1-249-417-11 | s | CARBON 1K 5% 1/4W |
| R236 | 1-249-439-11 | s | CARBON 68K 5% 1/4W |
| R237 | 1-249-428-11 | s | CARBON 8.2K 5% 1/4W |
| R238 | 1-249-421-11 | s | CARBON 2.2K 5% 1/4W |
| R239 | 1-249-428-11 | s | CARBON 8.2K 5% 1/4W |
| R240 | 1-249-421-11 | s | CARBON 2.2K 5% 1/4W |
| R241 | 1-249-425-11 | s | CARBON 4.7K 5% 1/4W |
| R242 | 1-249-425-11 | s | CARBON 4.7K 5% 1/4W |
| R243 | 1-249-425-11 | s | CARBON 4.7K 5% 1/4W |
| R244 | 1-249-425-11 | s | CARBON 4.7K 5% 1/4W |
| R245 | 1-249-439-11 | s | CARBON 68K 5% 1/4W |
| R246 | 1-249-417-11 | s | CARBON 1K 5% 1/4W |
| R247 | 1-249-439-11 | s | CARBON 68K 5% 1/4W |
| R248 | 1-249-417-11 | s | CARBON 1K 5% 1/4W |
| R249 | 1-249-428-11 | s | CARBON 8.2K 5% 1/4W |
| R250 | 1-249-422-11 | s | CARBON 2.7K 5% 1/4W |
| R251 | 1-249-431-11 | s | CARBON 15K 5% 1/4W |
| R252 | 1-249-420-11 | s | CARBON 1.8K 5% 1/4W |
| R253 | 1-249-423-11 | s | CARBON 3.3K 5% 1/4W |
| R254 | 1-205-623-00 | s | WIREWOUND 47 5% 5W |
| R255 | 1-205-623-00 | s | WIREWOUND 47 5% 5W |
| R256 | 1-205-623-00 | s | WIREWOUND 47 5% 5W |
| R257 | 1-216-462-11 | s | METAL 8.2K 5% 2W |
| R258 | 1-216-462-11 | s | METAL 8.2K 5% 2W |
| R259 | 1-206-676-00 | s | METAL 3.3K 5% 2W |
| R260 | 1-206-674-00 | s | METAL 2.7K 5% 2W |
| R264 | ⚠1-214-721-00 | s | METAL 470 1% 1/4W |
| R270 | ⚠1-214-721-00 | s | METAL 470 1% 1/4W |
| R276 | ⚠1-214-722-00 | s | METAL 510 1% 1/4W |
| R282 | ⚠1-214-713-00 | s | METAL 220 1% 1/4W |
| RV201 | 1-228-990-00 | s | RES, ADJ, METAL 1K |
| RV203 | 1-228-990-00 | s | RES, ADJ, METAL 1K |
| RV204 | 1-228-990-00 | s | RES, ADJ, METAL 1K |
| RV205 | 1-228-990-00 | s | RES, ADJ, METAL 1K |
| RV206 | 1-228-990-00 | s | RES, ADJ, METAL 1K |
| RV207 | 1-237-515-21 | s | RES, ADJ, METAL 1K |
| RV208 | 1-237-515-21 | s | RES, ADJ, METAL 1K |
| RV209 | 1-237-515-21 | s | RES, ADJ, METAL 1K |
| RV210 | 1-237-515-21 | s | RES, ADJ, METAL 1K |
| T101 | ⚠A-4935-015-A | s | TRANSFORMER, CONVERTER |
| T102 | ⚠1-421-819-11 | s | TRANSFORMER, CURRENT |
| T103 | ⚠1-437-187-11 | s | TRANSFORMER, DRIVE |
| T104 | ⚠1-437-187-11 | s | TRANSFORMER, DRIVE |
| T201 | 1-437-114-00 | s | TRANSFORMER, DRIVER |

(SP-02 BOARD)

| Ref. No. or Q'ty | Part No. | SP | Description |
|---|---|---|---|
| T202 | 1-437-114-00 | s | TRANSFORMER, DRIVER |
| T203 | 1-437-114-00 | s | TRANSFORMER, DRIVER |
| T204 | 1-437-114-00 | s | TRANSFORMER, DRIVER |
| T205 | A-4935-016-A | s | TRANSFORMER, CURRENT |
| T206 | A-4935-016-A | s | TRANSFORMER, CURRENT |
| T207 | A-4935-016-A | s | TRANSFORMER, CURRENT |
| T208 | A-4935-016-A | s | TRANSFORMER, CURRENT |
| TS201 | 1-570-258-12 | s | SWITCH, THERMAL 90-DEG-C |
| TS202 | 1-570-258-61 | s | SWITCH, THERMAL 110-DEG-C |

## SP-03 BOARD

| Ref. No. or Q'ty | Part No. | SP | Description |
|---|---|---|---|
| 1pc | A-4925-190-A | o | SP-03 ASSY |
| 1pc | A-4925-191-A | o | UR-20-C2 (UR-09-C2)ASSY |
| 1pc | A-4925-192-A | o | UR-20-C5 (CR-18-C5)ASSY |
| C101 | 1-125-470-11 | s | ELECT 560uF 20% 400V |
| C102 | 1-136-201-11 | s | FILM 0.22uF 5% 400V |
| C103 | 1-136-201-11 | s | FILM 0.22uF 5% 400V |
| C104 | 1-161-741-00 | s | CERAMIC 1000PF 20% AC400V |
| C106 | 1-161-741-00 | s | CERAMIC 1000PF 20% AC400V |
| C107 | 1-161-741-00 | s | CERAMIC 1000PF 20% AC400V |
| C108 | 1-125-470-11 | s | ELECT 560uF 20% 400V |
| C109 | 1-123-659-00 | s | ELECT 4.7uF 20% 250V |
| C110 | 1-123-659-00 | s | ELECT 4.7uF 20% 250V |
| C111 | 1-161-911-11 | s | CERAMIC 470PF 10% 500V |
| C112 | 1-130-772-00 | s | FILM 0.22uF 5% 63V |
| C113 | 1-130-772-00 | s | FILM 0.22uF 5% 63V |
| C114 | 1-123-659-00 | s | ELECT 4.7uF 20% 250V |
| C115 | 1-123-659-00 | s | ELECT 4.7uF 20% 250V |
| C116 | 1-161-911-11 | s | CERAMIC 470PF 10% 500V |
| C117 | 1-130-772-00 | s | FILM 0.22uF 5% 63V |
| C118 | 1-130-772-00 | s | FILM 0.22uF 5% 63V |
| C119 | 1-161-911-11 | s | CERAMIC 470PF 10% 500V |
| C120 | 1-161-911-11 | s | CERAMIC 470PF 10% 500V |
| C201 | 1-161-925-00 | s | CERAMIC 100PF 10% 500V |
| C202 | 1-161-925-00 | s | CERAMIC 100PF 10% 500V |
| C203 | 1-124-574-11 | s | ELECT 3900uF 20% 16V |
| C204 | 1-124-574-11 | s | ELECT 3900uF 20% 16V |
| C205 | 1-124-579-11 | s | ELECT 1000uF 20% 16V |
| C207 | 1-136-165-00 | s | FILM 0.1uF 5% 50V |
| C208 | 1-161-925-00 | s | CERAMIC 100PF 10% 500V |
| C209 | 1-161-925-00 | s | CERAMIC 100PF 10% 500V |
| C210 | 1-124-440-11 | s | ELECT 3300uF 20% 25V |
| C211 | 1-124-574-11 | s | ELECT 3900uF 20% 16V |
| C214 | 1-136-165-00 | s | FILM 0.1uF 5% 50V |
| C216 | 1-136-165-00 | s | FILM 0.1uF 5% 50V |
| C217 | 1-136-157-00 | s | FILM 0.022uF 5% 50V |
| C218 | 1-136-165-00 | s | FILM 0.1uF 5% 50V |
| C219 | 1-136-165-00 | s | FILM 0.1uF 5% 50V |
| C220 | 1-136-165-00 | s | FILM 0.1uF 5% 50V |
| C221 | 1-136-153-00 | s | FILM 0.01uF 5% 50V |
| C222 | 1-136-153-00 | s | FILM 0.01uF 5% 50V |
| C224 | 1-124-579-11 | s | ELECT 1000uF 20% 16V |
| C225 | 1-161-925-00 | s | CERAMIC 100PF 10% 500V |
| C226 | 1-161-925-00 | s | CERAMIC 100PF 10% 500V |
| C227 | 1-124-962-11 | s | ELECT 2200uF 20% 25V |
| C228 | 1-124-962-11 | s | ELECT 2200uF 20% 25V |
| C229 | 1-126-104-11 | s | ELECT 470uF 20% 35V |
| C230 | 1-161-925-00 | s | CERAMIC 100PF 10% 500V |
| C231 | 1-161-925-00 | s | CERAMIC 100PF 10% 500V |
| C232 | 1-124-962-11 | s | ELECT 2200uF 20% 25V |
| C233 | 1-124-962-11 | s | ELECT 2200uF 20% 25V |
| C234 | 1-126-104-11 | s | ELECT 470uF 20% 35V |
| C235 | 1-136-165-00 | s | FILM 0.1uF 5% 50V |
| C237 | 1-124-574-11 | s | ELECT 3900uF 20% 16V |
| C238 | 1-136-157-00 | s | FILM 0.022uF 5% 50V |
| C239 | 1-124-574-11 | s | ELECT 3900uF 20% 16V |
| C242 | 1-136-165-00 | s | FILM 0.1uF 5% 50V |
| C243 | 1-136-169-00 | s | MYLAR 0.22uF 5% 50V |
| C244 | 1-136-169-00 | s | MYLAR 0.22uF 5% 50V |

(SP-03 BOARD)

| Ref. No. or Q'ty | Part No. | SP | Description |
|---|---|---|---|
| C247 | 1-124-482-11 | s | ELECT 33uF 20% 35V |
| CN104M | 1-560-176-00 | o | CONNECTOR, 2P, MALE |
| CN206M | 1-560-300-00 | o | CONNECTOR, IL 3P, MALE |
| CN207M | 1-560-305-00 | o | CONNECTOR, IL 10P, MALE |
| CN208F | 1-509-985-00 | o | HOUSING, IL 4P |
| | 1-560-298-00 | o | CONTACT, FEMALE AWG22-28 |
| CN208M | 1-560-301-00 | o | CONNECTOR, IL 4P, MALE |
| CN906M | 1-560-311-00 | o | CONNECTOR, IL 5P MALE |
| CN907M | 1-560-887-00 | o | CONNECTOR, MIC 17P MALE |
| D101 | 8-719-981-00 | s | DIODE ERC81-004 |
| D102 | 8-719-911-19 | s | DIODE 1SS119 |
| D103 | 8-719-981-00 | s | DIODE ERC81-004 |
| D104 | 8-719-911-19 | s | DIODE 1SS119 |
| D105 | 8-719-981-00 | s | DIODE ERC81-004 |
| D106 | 8-719-911-19 | s | DIODE 1SS119 |
| D107 | 8-719-981-00 | s | DIODE ERC81-004 |
| D108 | 8-719-911-19 | s | DIODE 1SS119 |
| D109 | 8-719-104-07 | s | DIODE F114F |
| D110 | 8-719-104-07 | s | DIODE F114F |
| D111 | 8-719-104-07 | s | DIODE F114F |
| D112 | 8-719-104-07 | s | DIODE F114F |
| D201 | 8-719-302-60 | s | DIODE FML-32S |
| D202 | 8-719-911-19 | s | DIODE 1SS119 |
| D203 | 8-719-911-19 | s | DIODE 1SS119 |
| D204 | 8-719-313-21 | s | LED, SEL1321G, GRN |
| D205 | 1-807-793-11 | s | DIODE FML-22S |
| D206 | 8-719-911-19 | s | DIODE 1SS119 |
| D207 | 8-719-911-19 | s | DIODE 1SS119 |
| D208 | 8-719-110-78 | s | DIODE RD33ES-B2 |
| D209 | 8-719-110-78 | s | DIODE RD33ES-B2 |
| D210 | 8-719-911-19 | s | DIODE 1SS119 |
| D211 | 8-719-911-19 | s | DIODE 1SS119 |
| D212 | 8-719-301-27 | s | DIODE CTG-33S |
| D213 | 8-719-301-26 | s | DIODE CTG-33R |
| D214 | 8-719-110-78 | s | DIODE RD33ES-B2 |
| D215 | 8-719-110-78 | s | DIODE RD33ES-B2 |
| D216 | 8-719-110-67 | s | DIODE RD27ESB2 |
| D217 | 8-719-911-19 | s | DIODE 1SS119 |
| D218 | 8-719-110-57 | s | DIODE RD22ES-B2 |
| D219 | 8-719-911-19 | s | DIODE 1SS119 |
| D220 | 8-719-313-21 | s | LED, SEL1321G, GRN |
| D221 | 8-719-313-21 | s | LED, SEL1321G, GRN |
| D222 | 8-719-313-21 | s | LED, SEL1321G, GRN |
| D223 | 8-719-911-19 | s | DIODE 1SS119 |
| D224 | 8-719-911-19 | s | DIODE 1SS119 |
| D225 | 8-719-911-19 | s | DIODE 1SS119 |
| D226 | 8-719-911-19 | s | DIODE 1SS119 |
| D227 | 8-719-300-33 | s | DIODE RU-3AM |
| D229 | 8-719-911-19 | s | DIODE 1SS119 |
| D230 | 8-719-911-19 | s | DIODE 1SS119 |
| D231 | 8-719-911-19 | s | DIODE 1SS119 |
| D232 | 8-719-911-19 | s | DIODE 1SS119 |
| D233 | 1-807-793-11 | s | DIODE FML-22S |
| F201 | ⚠1-532-604-21 | s | FUSE, THERMAL 130-DEG-C |
| F202 | ⚠1-532-604-21 | s | FUSE, THERMAL 130-DEG-C |
| IC201 | 8-759-135-80 | s | IC UPC358C |
| IC202 | 8-759-914-44 | s | IC TL431CLPB |

(SP-03 BOARD)

| Ref. No. or Q'ty | Part No. | SP | Description |
|---|---|---|---|
| IC203 | 8-759-135-80 | s | IC UPC358C |
| IC204 | 8-759-914-44 | s | IC TL431CLPB |
| IC205 | 8-759-135-80 | s | IC UPC358C |
| IC206 | 8-749-990-12 | s | IC STR-9012 |
| IC207 | 8-759-914-44 | s | IC TL431CLPB |
| L101 | 1-421-372-00 | s | TRANSFORMER, FERRITE(LFT) |
| L102 | 1-421-683-11 | s | COIL, CHOKE 5.6uH |
| L103 | 1-421-683-11 | s | COIL, CHOKE 5.6uH |
| L104 | 1-421-683-11 | s | COIL, CHOKE 5.6uH |
| L105 | 1-421-683-11 | s | COIL, CHOKE 5.6uH |
| L201 | 1-421-507-11 | s | COIL, CHOKE 96uH |
| L202 | 1-421-459-00 | s | COIL, CHOKE |
| L203 | 1-408-814-11 | s | COIL, CHOKE |
| L204 | 1-421-459-00 | s | COIL, CHOKE |
| L205 | A-4935-017-A | s | COIL, CHOKE |
| L206 | 1-421-459-00 | s | COIL, CHOKE |
| L207 | A-4935-017-A | s | COIL, CHOKE |
| L208 | 1-421-459-00 | s | COIL, CHOKE |
| L209 | 1-408-322-00 | s | COIL, CHOKE |
| L210 | 1-421-622-11 | s | TRANSFORMER, LINE FILTER |
| Q101 | 8-729-300-50 | s | TRANSISTOR 2SC2307-Y |
| Q102 | 8-729-300-50 | s | TRANSISTOR 2SC2307-Y |
| Q103 | 8-729-177-32 | s | TRANSISTOR 2SD773 |
| Q104 | 8-729-177-32 | s | TRANSISTOR 2SD773 |
| Q105 | 8-729-300-50 | s | TRANSISTOR 2SC2307-Y |
| Q106 | 8-729-300-50 | s | TRANSISTOR 2SC2307-Y |
| Q107 | 8-729-177-32 | s | TRANSISTOR 2SD773 |
| Q108 | 8-729-177-32 | s | TRANSISTOR 2SD773 |
| Q201 | 1-807-819-11 | s | TRANSISTOR 2SD1707-P |
| Q202 | 8-729-102-03 | s | TRANSISTOR 2SD1020-H |
| Q203 | 8-729-205-02 | s | TRANSISTOR 2SA1150-Y |
| Q204 | 1-807-820-11 | s | TRANSISTOR 2SB1156-P |
| Q205 | 8-729-205-02 | s | TRANSISTOR 2SA1150-Y |
| Q206 | 8-729-102-03 | s | TRANSISTOR 2SD1020-H |
| Q207 | 8-729-900-80 | s | TRANSISTOR DTC114ES |
| Q208 | 8-729-900-80 | s | TRANSISTOR DTC114ES |
| Q209 | 8-729-900-80 | s | TRANSISTOR DTC114ES |
| Q210 | 8-729-900-80 | s | TRANSISTOR DTC114ES |
| Q211 | 8-729-900-61 | s | TRANSISTOR DTA114ES |
| Q212 | 8-729-900-61 | s | TRANSISTOR DTA114ES |
| Q213 | 8-729-900-61 | s | TRANSISTOR DTA114ES |
| Q214 | 8-729-102-03 | s | TRANSISTOR 2SD1020-H |
| Q215 | 8-729-205-02 | s | TRANSISTOR 2SA1150-Y |
| R101 | 1-205-624-00 | s | WIREWOUND 100 5% 5W |
| R102 | 1-249-480-11 | s | CARBON 3.30 5% 1/2W |
| R103 | ⚠1-212-873-11 | s | RES, FUSIBLE 47 1/4W |
| R104 | 1-249-480-11 | s | CARBON 3.30 5% 1/2W |
| R105 | ⚠1-212-873-11 | s | RES, FUSIBLE 47 1/4W |
| R106 | 1-205-624-00 | s | WIREWOUND 100 5% 5W |
| R107 | 1-249-480-11 | s | CARBON 3.30 5% 1/2W |
| R108 | ⚠1-212-873-11 | s | RES, FUSIBLE 47 1/4W |
| R109 | 1-249-480-11 | s | CARBON 3.30 5% 1/2W |
| R110 | ⚠1-212-873-11 | s | RES, FUSIBLE 47 1/4W |
| R201 | 1-205-631-00 | s | WIREWOUND 15 5% 5W |
| R202 | 1-249-417-11 | s | CARBON 1K 5% 1/4W |
| R203 | 1-249-435-11 | s | CARBON 33K 5% 1/4W |
| R204 | 1-249-417-11 | s | CARBON 1K 5% 1/4W |
| R205 | 1-249-435-11 | s | CARBON 33K 5% 1/4W |

(SP-03 BOARD)

| Ref. No. or Q'ty | Part No. | SP | Description |
|---|---|---|---|
| R206 | 1-249-432-11 | s | CARBON 18K 5% 1/4W |
| R207 | 1-247-895-00 | s | CARBON 470K 5% 1/4W |
| R208 | 1-217-568-00 | s | METAL 0.22 5% 2W |
| R209 | 1-249-425-11 | s | CARBON 4.7K 5% 1/4W |
| R210 | 1-249-417-11 | s | CARBON 1K 5% 1/4W |
| R211 | 1-249-439-11 | s | CARBON 68K 5% 1/4W |
| R212 | 1-249-405-11 | s | CARBON 100 5% 1/4W |
| R215 | 1-247-722-11 | s | CARBON 5.6K 5% 1/4W |
| R216 | 1-247-714-11 | s | CARBON 1.2K 5% 1/4W |
| R217 | 1-205-631-00 | s | WIREWOUND 15 5% 5W |
| R218 | 1-249-417-11 | s | CARBON 1K 5% 1/4W |
| R219 | 1-249-435-11 | s | CARBON 33K 5% 1/4W |
| R220 | 1-249-417-11 | s | CARBON 1K 5% 1/4W |
| R221 | 1-249-435-11 | s | CARBON 33K 5% 1/4W |
| R222 | 1-249-432-11 | s | CARBON 18K 5% 1/4W |
| R223 | 1-247-895-00 | s | CARBON 470K 5% 1/4W |
| R224 | 1-217-568-00 | s | METAL 0.22 5% 2W |
| R225 | 1-249-425-11 | s | CARBON 4.7K 5% 1/4W |
| R226 | 1-249-417-11 | s | CARBON 1K 5% 1/4W |
| R227 | 1-247-719-11 | s | CARBON 3.3K 5% 1/4W |
| R228 | 1-249-405-11 | s | CARBON 100 5% 1/4W |
| R231 | 1-249-405-11 | s | CARBON 100 5% 1/4W |
| R232 | 1-249-425-11 | s | CARBON 4.7K 5% 1/4W |
| R233 | 1-249-484-11 | s | CARBON 6.8 5% 1/2W |
| R234 | 1-205-652-00 | s | WIERWOUND 68 5% 5W |
| R235 | 1-205-652-00 | s | WIREWOUND 68 5% 5W |
| R236 | 1-205-652-00 | s | WIREWOUND 68 5% 5W |
| R237 | 1-249-425-11 | s | CARBON 4.7K 5% 1/4W |
| R238 | 1-249-425-11 | s | CARBON 4.7K 5% 1/4W |
| R239 | 1-249-425-11 | s | CARBON 4.7K 5% 1/4W |
| R240 | 1-247-714-11 | s | CARBON 1.2K 5% 1/4W |
| R241 | 1-249-462-11 | s | CARBON 22K 5% 1/4W |
| R242 | 1-249-425-11 | s | CARBON 4.7K 5% 1/4W |
| R243 | 1-249-425-11 | s | CARBON 4.7K 5% 1/4W |
| R244 | 1-249-429-11 | s | CARBON 10K 5% 1/4W |
| R245 | 1-249-433-11 | s | CARBON 22K 5% 1/4W |
| R246 | 1-249-439-11 | s | CARBON 68K 5% 1/4W |
| R247 | 1-249-484-11 | s | CARBON 6.8 5% 1/2W |
| R248 | 1-205-624-00 | s | WIREWOUND 100 5% 5W |
| R249 | 1-205-624-00 | s | WIREWOUND 100 5% 5W |
| R250 | 1-205-624-00 | s | WIREWOUND 100 5% 5W |
| R251 | 1-249-431-11 | s | CARBON 15K 5% 1/4W |
| R252 | 1-249-431-11 | s | CARBON 15K 5% 1/4W |
| R253 | 1-249-423-11 | s | CARBON 3.3K 5% 1/4W |
| R254 | 1-247-720-11 | s | CARBON 3.9K 5% 1/4W |
| R255 | 1-247-755-11 | s | CARBON 1.8K 5% 1/2W |
| R256 | 1-247-755-11 | s | CARBON 1.8K 5% 1/2W |
| R257 | 1-247-714-11 | s | CARBON 1.2K 5% 1/4W |
| R258 | 1-217-568-00 | s | METAL 0.22 5% 2W |
| R259 | 1-249-435-11 | s | CARBON 33K 5% 1/4W |
| R260 | 1-249-405-11 | s | CARBON 100 5% 1/4W |
| R261 | 1-249-423-11 | s | CARBON 3.3K 5% 1/4W |
| R262 | 1-217-568-00 | s | METAL 0.22 5% 2W |
| R263 | 1-249-435-11 | s | CARBON 33K 5% 1/4W |
| R264 | 1-249-405-11 | s | CARBON 100 5% 1/4W |
| R265 | 1-249-425-11 | s | CARBON 4.7K 5% 1/4W |
| R266 | 1-249-425-11 | s | CARBON 4.7K 5% 1/4W |
| R267 | 1-249-425-11 | s | CARBON 4.7K 5% 1/4W |
| R268 | 1-249-425-11 | s | CARBON 4.7K 5% 1/4W |

(SP-03 BOARD)

| Ref. No. or Q'ty | Part No. | SP | Description |
|---|---|---|---|
| R269 | 1-205-625-00 | s | WIREWOUND 220 5% 5W |
| R270 | 1-247-719-11 | s | CARBON 3.3K 5% 1/4W |
| RV201 | 1-237-515-21 | s | RES, ADJ, METAL 1K |
| RV202 | 1-237-515-21 | s | RES, ADJ, METAL 1K |
| RV203 | 1-228-990-00 | s | RES, ADJ, METAL 1K |
| T101 | ⚠A-4935-019-A | s | TRANSFORMER, CONVERTER |
| T102 | ⚠1-421-819-11 | s | TRANSFORMER, CURRENT |
| T103 | ⚠1-437-187-11 | s | TRANSFORMER, DRIVE |
| T104 | ⚠1-437-187-11 | s | TRANSFORMER, DRIVE |
| T105 | ⚠A-4935-018-A | s | TRANSFORMER, CONVERTER |
| T106 | ⚠1-421-819-11 | s | TRANSFORMER, CURRENT |
| T107 | ⚠1-437-187-11 | s | TRANSFORMER, DRIVE |
| T108 | ⚠1-437-187-11 | s | TRANSFORMER, DRIVE |
| TS201 | 1-570-258-22 | s | SWITCH, THERAML 80-DEG-C |
| TS202 | 1-570-258-12 | s | SWITCH, THERMAL 90-DEG-C |

-------

SR-37 BOARD

-------

| Ref. No. or Q'ty | Part No. | SP | Description |
|---|---|---|---|
| 7pcs | 1-560-240-11 | s | CONTACT |

-------

SR-44 BOARD

-------

| Ref. No. or Q'ty | Part No. | SP | Description |
|---|---|---|---|
| CN291 | 1-560-313-11 | o | CONNECTOR IL 8P, MALE |

## SV-90 BOARD

| Ref. No. or Q'ty | Part No. | SP | Description |
|---|---|---|---|
| 1pc | A-6015-110-A | o | MOUNTED CIRCUIT BOARD, SV-90 |
| 1pc | 7-622-207-05 | s | N 2.6, TYPE 2 |
| 1pc | 4-812-134-11 | s | RIVET NYLON, 3.5 |
| 1pc | 7-622-207-05 | s | N 2.6, TYPE 2 |
| 1pc | 4-812-134-11 | s | RIVET NYLON, 3.5 |
| 1pc | 7-622-207-05 | s | N 2.6, TYPE 2 |
| 1pc | 4-812-134-11 | s | RIVET NYLON, 3.5 |
| 1pc | 7-622-207-05 | s | N 2.6, TYPE 2 |
| 1pc | 4-812-134-11 | s | RIVET NYLON, 3.5 |
| 2pcs | 7-622-207-05 | s | N 2.6, TYPE 2 |
| 6pcs | 7-628-254-40 | s | SCREW +PS 2.6X12 |
| 2pcs | 3-714-634-01 | o | LEVER, PC BOARD |
| 9pcs | 7-682-948-01 | s | SCREW +PSW 3X8 |
| 2pcs | 7-685-533-19 | s | SCREW +BTP 2.6X6 TYPE2 N-S |
| 2pcs | 3-714-691-01 | o | PIN, SPRING |
| 1pc | 1-526-655-00 | s | SOCKET, IC (DP) 18P |
| C1 | 1-124-248-00 | s | ELECT 22uF 20% 35V |
| C1 | 1-162-730-11 | s | CERAMIC 680PF 1% 50V |
| C2 | 1-161-055-00 | s | CERAMIC 0.022uF 10% 50V |
| C2 | 1-162-730-11 | s | CERAMIC 680PF 1% 50V |
| C3 | 1-161-055-00 | s | CERAMIC 0.022uF 10% 50V |
| C3 | 1-162-730-11 | s | CERAMIC 680PF 1% 50V |
| C4 | 1-124-248-00 | s | ELECT 22uF 20% 35V |
| C4 | 1-162-730-11 | s | CERAMIC 680PF 1% 50V |
| C5 | 1-130-483-00 | s | MYLAR 0.01uF 5% 50V |
| C5 | 1-162-708-11 | s | CERAMIC 82PF 1% 50V |
| C6 | 1-124-566-11 | s | ELECT 120uF 20% 6.3V |
| C6 | 1-131-367-00 | s | TANTALUM 22uF 10% 20V |
| C7 | 1-161-055-00 | s | CERAMIC 0.022uF 10% 50V |
| C7 | 1-162-896-11 | s | CERAMIC 0.01uF 10% 50V |
| C8 | 1-161-055-00 | s | CERAMIC 0.022uF 10% 50V |
| C8 | 1-162-896-11 | s | CERAMIC 0.01uF 10% 50V |
| C9 | 1-109-622-00 | s | MICA 0.0012 1% 100V |
| C9 | 1-162-896-11 | s | CERAMIC 0.01uF 10% 50V |
| C10 | 1-161-055-00 | s | CERAMIC 0.022uF 10% 50V |
| C10 | 1-162-896-11 | s | CERAMIC 0.01uF 10% 50V |
| C11 | 1-124-248-00 | s | ELECT 22uF 20% 35V |
| C11 | 1-162-896-11 | s | CERAMIC 0.01uF 10% 50V |
| C12 | 1-109-622-00 | s | MICA 0.0012 1% 100V |
| C12 | 1-162-896-11 | s | CERAMIC 0.01uF 10% 50V |
| C13 | 1-130-471-00 | s | MYLAR 0.001uF 5% 50V |
| C13 | 1-162-896-11 | s | CERAMIC 0.01uF 10% 50V |
| C14 | 1-162-777-11 | s | CERAMIC 0.01uF 5% 50V |
| C14 | 1-162-896-11 | s | CERAMIC 0.01uF 10% 50V |
| C15 | 1-161-055-00 | s | CERAMIC 0.022uF 10% 50V |
| C15 | 1-162-896-11 | s | CERAMIC 0.01uF 10% 50V |
| C16 | 1-124-248-00 | s | ELECT 22uF 20% 35V |
| C16 | 1-162-896-11 | s | CERAMIC 0.01uF 10% 50V |
| C17 | 1-161-055-00 | s | CERAMIC 0.022uF 10% 50V |
| C17 | 1-162-896-11 | s | CERAMIC 0.01uF 10% 50V |
| C18 | 1-124-248-00 | s | ELECT 22uF 20% 35V |
| C19 | 1-161-055-00 | s | CERAMIC 0.022uF 10% 50V |
| C20 | 1-161-055-00 | s | CERAMIC 0.022uF 10% 50V |
| C21 | 1-130-480-00 | s | MYLAR 0.0056uF 5% 50V |
| C22 | 1-130-476-00 | s | MYLAR 0.0027uF 5% 50V |
| C23 | 1-161-055-00 | s | CERAMIC 0.022uF 10% 50V |
| C24 | 1-161-055-00 | s | CERAMIC 0.022uF 10% 50V |
| C25 | 1-161-055-00 | s | CERAMIC 0.022uF 10% 50V |

(SV-90 BOARD)

| Ref. No. or Q'ty | Part No. | SP | Description |
|---|---|---|---|
| C26 | 1-124-248-00 | s | ELECT 22uF 20% 35V |
| C27 | 1-161-055-00 | s | CERAMIC 0.022uF 10% 50V |
| C28 | 1-161-055-00 | s | CERAMIC 0.022uF 10% 50V |
| C29 | 1-130-485-00 | s | MYLAR 0.015uF 5% 50V |
| C30 | 1-161-055-00 | s | CERAMIC 0.022uF 10% 50V |
| C31 | 1-161-055-00 | s | CERAMIC 0.022uF 10% 50V |
| C32 | 1-161-055-00 | s | CERAMIC 0.022uF 10% 50V |
| C33 | 1-130-480-00 | s | MYLAR 0.0056uF 5% 50V |
| C34 | 1-130-476-00 | s | MYLAR 0.0027uF 5% 50V |
| C35 | 1-161-055-00 | s | CERAMIC 0.022uF 10% 50V |
| C36 | 1-161-055-00 | s | CERAMIC 0.022uF 10% 50V |
| C37 | 1-161-055-00 | s | CERAMIC 0.022uF 10% 50V |
| C38 | 1-124-943-11 | s | ELECT 39 20% 25V |
| C39 | 1-161-055-00 | s | CERAMIC 0.022uF 10% 50V |
| C40 | 1-161-055-00 | s | CERAMIC 0.022uF 10% 50V |
| C41 | 1-161-055-00 | s | CERAMIC 0.022uF 10% 50V |
| C42 | 1-161-055-00 | s | CERAMIC 0.022uF 10% 50V |
| C43 | 1-130-483-00 | s | MYLAR 0.01uF 5% 50V |
| C44 | 1-161-055-00 | s | CERAMIC 0.022uF 10% 50V |
| C45 | 1-130-477-00 | s | MYLAR 0.0033uF 5% 50V |
| C46 | 1-161-055-00 | s | CERAMIC 0.022uF 10% 50V |
| C47 | 1-161-055-00 | s | CERAMIC 0.022uF 10% 50V |
| C48 | 1-161-055-00 | s | CERAMIC 0.022uF 10% 50V |
| C49 | 1-161-055-00 | s | CERAMIC 0.022uF 10% 50V |
| C50 | 1-130-475-00 | s | MYLAR 0.0022uF 5% 50V |
| C51 | 1-130-471-00 | s | MYLAR 0.001uF 5% 50V |
| C52 | 1-130-495-00 | s | MYLAR 0.1uF 5% 50V |
| C53 | 1-161-055-00 | s | CERAMIC 0.022uF 10% 50V |
| C54 | 1-161-055-00 | s | CERAMIC 0.022uF 10% 50V |
| C55 | 1-124-943-11 | s | ELECT 39 20% 25V |
| C56 | 1-161-055-00 | s | CERAMIC 0.022uF 10% 50V |
| C57 | 1-124-943-11 | s | ELECT 39 20% 25V |
| C58 | 1-124-943-11 | s | ELECT 39 20% 25V |
| C59 | 1-161-055-00 | s | CERAMIC 0.022uF 10% 50V |
| C60 | 1-161-055-00 | s | CERAMIC 0.022uF 10% 50V |
| C61 | 1-130-495-00 | s | MYLAR 0.1uF 5% 50V |
| C62 | 1-130-471-00 | s | MYLAR 0.001uF 5% 50V |
| C63 | 1-130-475-00 | s | MYLAR 0.0022uF 5% 50V |
| C64 | 1-130-471-00 | s | MYLAR 0.001uF 5% 50V |
| C65 | 1-130-495-00 | s | MYLAR 0.1uF 5% 50V |
| C66 | 1-161-055-00 | s | CERAMIC 0.022uF 10% 50V |
| C67 | 1-161-055-00 | s | CERAMIC 0.022uF 10% 50V |
| C68 | 1-161-055-00 | s | CERAMIC 0.022uF 10% 50V |
| C69 | 1-161-055-00 | s | CERAMIC 0.022uF 10% 50V |
| C70 | 1-161-055-00 | s | CERAMIC 0.022uF 10% 50V |
| C71 | 1-161-055-00 | s | CERAMIC 0.022uF 10% 50V |
| C72 | 1-161-055-00 | s | CERAMIC 0.022uF 10% 50V |
| C73 | 1-161-055-00 | s | CERAMIC 0.022uF 10% 50V |
| C74 | 1-161-055-00 | s | CERAMIC 0.022uF 10% 50V |
| C75 | 1-161-055-00 | s | CERAMIC 0.022uF 10% 50V |
| C76 | 1-161-055-00 | s | CERAMIC 0.022uF 10% 50V |
| C77 | 1-161-055-00 | s | CERAMIC 0.022uF 10% 50V |
| C78 | 1-161-055-00 | s | CERAMIC 0.022uF 10% 50V |
| C79 | 1-161-055-00 | s | CERAMIC 0.022uF 10% 50V |
| C80 | 1-161-055-00 | s | CERAMIC 0.022uF 10% 50V |
| C81 | 1-161-055-00 | s | CERAMIC 0.022uF 10% 50V |
| C82 | 1-161-055-00 | s | CERAMIC 0.022uF 10% 50V |
| C83 | 1-161-055-00 | s | CERAMIC 0.022uF 10% 50V |
| C84 | 1-161-055-00 | s | CERAMIC 0.022uF 10% 50V |

(SV-90 BOARD)

| Ref. No. or Q'ty | Part No. | SP | Description |
|---|---|---|---|
| C85 | 1-161-055-00 | s | CERAMIC 0.022uF 10% 50V |
| C86 | 1-161-055-00 | s | CERAMIC 0.022uF 10% 50V |
| C87 | 1-161-055-00 | s | CERAMIC 0.022uF 10% 50V |
| C88 | 1-161-055-00 | s | CERAMIC 0.022uF 10% 50V |
| C89 | 1-161-055-00 | s | CERAMIC 0.022uF 10% 50V |
| C90 | 1-161-055-00 | s | CERAMIC 0.022uF 10% 50V |
| C91 | 1-161-055-00 | s | CERAMIC 0.022uF 10% 50V |
| C92 | 1-161-055-00 | s | CERAMIC 0.022uF 10% 50V |
| C93 | 1-161-055-00 | s | CERAMIC 0.022uF 10% 50V |
| C94 | 1-161-055-00 | s | CERAMIC 0.022uF 10% 50V |
| C95 | 1-130-495-00 | s | MYLAR 0.1uF 5% 50V |
| C96 | 1-126-160-11 | s | ELECT 1uF 20% 50V |
| C97 | 1-124-261-00 | s | ELECT 10uF 20% 50V |
| C98 | 1-161-055-00 | s | CERAMIC 0.022uF 10% 50V |
| C99 | 1-161-055-00 | s | CERAMIC 0.022uF 10% 50V |
| C100 | 1-161-055-00 | s | CERAMIC 0.022uF 10% 50V |
| C101 | 1-124-248-00 | s | ELECT 22uF 20% 35V |
| C102 | 1-124-248-00 | s | ELECT 22uF 20% 35V |
| C103 | 1-124-248-00 | s | ELECT 22uF 20% 35V |
| C104 | 1-124-248-00 | s | ELECT 22uF 20% 35V |
| C105 | 1-124-248-00 | s | ELECT 22uF 20% 35V |
| C106 | 1-124-248-00 | s | ELECT 22uF 20% 35V |
| C107 | 1-124-248-00 | s | ELECT 22uF 20% 35V |
| C108 | 1-161-055-00 | s | CERAMIC 0.022uF 10% 50V |
| C109 | 1-161-055-00 | s | CERAMIC 0.022uF 10% 50V |
| C110 | 1-124-499-11 | s | ELECT, NONPOLAR 1uF 20% 50V |
| C111 | 1-102-106-00 | s | CERAMIC 100PF 10% 50V |
| C112 | 1-126-096-11 | s | ELECT 10uF 20% 35V |
| C113 | 1-126-096-11 | s | ELECT 10uF 20% 35V |
| C114 | 1-130-471-00 | s | MYLAR 0.001uF 5% 50V |
| C115 | 1-130-471-00 | s | MYLAR 0.001uF 5% 50V |
| C116 | 1-130-471-00 | s | MYLAR 0.001uF 5% 50V |
| C117 | 1-161-055-00 | s | CERAMIC 0.022uF 10% 50V |
| C118 | 1-107-164-00 | s | MICA 51PF 5% 500V |
| C119 | 1-126-160-11 | s | ELECT 1uF 20% 50V |
| C120 | 1-126-160-11 | s | ELECT 1uF 20% 50V |
| C121 | 1-161-055-00 | s | CERAMIC 0.022uF 10% 50V |
| C122 | 1-161-055-00 | s | CERAMIC 0.022uF 10% 50V |
| C123 | 1-130-471-00 | s | MYLAR 0.001uF 5% 50V |
| C124 | 1-161-055-00 | s | CERAMIC 0.022uF 10% 50V |
| C125 | 1-161-055-00 | s | CERAMIC 0.022uF 10% 50V |
| C126 | 1-124-566-11 | s | ELECT 120uF 20% 6.3V |
| C127 | 1-124-566-11 | s | ELECT 120uF 20% 6.3V |
| C128 | 1-161-055-00 | s | CERAMIC 0.022uF 10% 50V |
| C129 | 1-161-055-00 | s | CERAMIC 0.022uF 10% 50V |
| C130 | 1-161-055-00 | s | CERAMIC 0.022uF 10% 50V |
| C131 | 1-161-055-00 | s | CERAMIC 0.022uF 10% 50V |
| C132 | 1-161-055-00 | s | CERAMIC 0.022uF 10% 50V |
| C133 | 1-161-055-00 | s | CERAMIC 0.022uF 10% 50V |
| C134 | 1-161-055-00 | s | CERAMIC 0.022uF 10% 50V |
| C135 | 1-161-055-00 | s | CERAMIC 0.022uF 10% 50V |
| C136 | 1-161-055-00 | s | CERAMIC 0.022uF 10% 50V |
| C137 | 1-161-055-00 | s | CERAMIC 0.022uF 10% 50V |
| C138 | 1-107-210-00 | s | MICA 22PF 5% 500V |
| C139 | 1-107-210-00 | s | MICA 22PF 5% 500V |
| C140 | 1-161-055-00 | s | CERAMIC 0.022uF 10% 50V |
| C141 | 1-161-055-00 | s | CERAMIC 0.022uF 10% 50V |
| C142 | 1-161-055-00 | s | CERAMIC 0.022uF 10% 50V |
| C143 | 1-161-055-00 | s | CERAMIC 0.022uF 10% 50V |

(SV-90 BOARD)

| Ref. No. or Q'ty | Part No. | SP | Description |
|---|---|---|---|
| C144 | 1-161-055-00 | s | CERAMIC 0.022uF 10% 50V |
| C145 | 1-161-055-00 | s | CERAMIC 0.022uF 10% 50V |
| C146 | 1-161-055-00 | s | CERAMIC 0.022uF 10% 50V |
| C147 | 1-161-055-00 | s | CERAMIC 0.022uF 10% 50V |
| C148 | 1-161-055-00 | s | CERAMIC 0.022uF 10% 50V |
| C149 | 1-161-055-00 | s | CERAMIC 0.022uF 10% 50V |
| C150 | 1-130-483-00 | s | MYLAR 0.01uF 5% 50V |
| C151 | 1-161-055-00 | s | CERAMIC 0.022uF 10% 50V |
| C152 | 1-161-055-00 | s | CERAMIC 0.022uF 10% 50V |
| C153 | 1-161-055-00 | s | CERAMIC 0.022uF 10% 50V |
| C154 | 1-161-055-00 | s | CERAMIC 0.022uF 10% 50V |
| C155 | 1-124-566-11 | s | ELECT 120uF 20% 6.3V |
| C156 | 1-124-566-11 | s | ELECT 120uF 20% 6.3V |
| C157 | 1-161-055-00 | s | CERAMIC 0.022uF 10% 50V |
| C159 | 1-130-491-00 | s | MYLAR 0.047uF 5% 50V |
| C160 | 1-102-112-00 | s | CERAMIC 330PF 10% 50V |
| C161 | 1-161-055-00 | s | CERAMIC 0.022uF 10% 50V |
| C162 | 1-107-202-00 | s | MICA 10PF 5% 500V |
| CN1 | 1-563-339-11 | o | CONNECTOR, DIN 48P, FEMALE |
| CN1 | 1-566-085-11 | s | CONNECTOR, 20P, MALE |
| CN2 | 1-560-313-00 | o | CONNECTOR, IL 8P, MALE |
| CN2 | 1-566-085-11 | s | CONNECTOR, 20P, MALE |
| CN3 | 1-566-085-11 | s | CONNECTOR, 20P, MALE |
| CN315 | 1-506-748-11 | s | CONNECTOR, DIN 96P, MALE |
| CN316 | 1-506-748-11 | s | CONNECTOR, DIN 96P, MALE |
| D1 | 8-719-911-19 | s | DIODE 1SS119 |
| D2 | 8-719-911-19 | s | DIODE 1SS119 |
| D3 | 8-719-911-19 | s | DIODE 1SS119 |
| D4 | 8-719-911-19 | s | DIODE 1SS119 |
| D5 | 8-719-911-19 | s | DIODE 1SS119 |
| D7 | 8-719-911-19 | s | DIODE 1SS119 |
| D8 | 8-719-911-19 | s | DIODE 1SS119 |
| D9 | 8-719-918-88 | s | DIODE 1SS198 |
| D10 | 8-719-918-88 | s | DIODE 1SS198 |
| D11 | 8-719-918-88 | s | DIODE 1SS198 |
| D12 | 8-719-911-19 | s | DIODE 1SS119 |
| D13 | 8-719-911-19 | s | DIODE 1SS119 |
| D14 | 8-719-911-19 | s | DIODE 1SS119 |
| D15 | 8-719-911-19 | s | DIODE 1SS119 |
| D16 | 8-719-911-19 | s | DIODE 1SS119 |
| D17 | 8-719-911-19 | s | DIODE 1SS119 |
| D18 | 8-719-911-19 | s | DIODE 1SS119 |
| D19 | 8-719-911-19 | s | DIODE 1SS119 |
| D20 | 8-719-911-19 | s | DIODE 1SS119 |
| D21 | 8-719-911-19 | s | DIODE 1SS119 |
| D22 | 8-719-911-19 | s | DIODE 1SS119 |
| D23 | 8-719-800-60 | s | LED TLR214, RED |
| D24 | 8-719-800-60 | s | LED TLR214, RED |
| D25 | 8-719-800-60 | s | LED TLR214, RED |
| D26 | 8-719-400-35 | s | LED LN35BP, GRN |
| D27 | 8-719-400-35 | s | LED LN35BP, GRN |
| D28 | 8-719-400-35 | s | LED LN35BP, GRN |
| D29 | 8-719-400-35 | s | LED LN35BP, GRN |
| D30 | 8-719-918-88 | s | DIODE 1SS198 |
| D31 | 8-719-918-88 | s | DIODE 1SS198 |
| D33 | 8-719-918-88 | s | DIODE 1SS198 |
| D34 | 8-719-911-19 | s | DIODE 1SS119 |
| D35 | 8-719-911-19 | s | DIODE 1SS119 |

(SV-90 BOARD)

| Ref. No. or Q'ty | Part No. | SP | Description |
|---|---|---|---|
| D36 | 8-719-911-19 | s | DIODE 1SS119 |
| D37 | 8-719-911-19 | s | DIODE 1SS119 |
| D38 | 8-719-911-19 | s | DIODE 1SS119 |
| D39 | 8-719-911-19 | s | DIODE 1SS119 |
| IC1 | 8-759-239-59 | s | IC TC74HC221AP |
| IC1 | 8-759-708-05 | s | IC NJM78L05A |
| IC2 | 8-759-916-29 | s | IC SN74HC74N |
| IC2 | 8-759-937-22 | s | IC BA707 |
| IC3 | 8-759-916-12 | s | IC SN74HC00N |
| IC4 | 8-759-700-65 | s | IC NJM79L05A |
| IC5 | 8-759-916-57 | s | IC SN74HC191N |
| IC6 | 8-759-916-29 | s | IC SN74HC74N |
| IC7 | 8-759-916-29 | s | IC SN74HC74N |
| IC8 | 8-759-916-12 | s | IC SN74HC00N |
| IC9 | 8-759-000-01 | s | IC MC74HC4538N |
| IC10 | 8-759-000-01 | s | IC MC74HC4538N |
| ICA1 | 8-759-745-58 | s | IC NJM4558D |
| ICA4 | 8-759-103-19 | s | IC UPC319C |
| ICA5 | 8-759-910-43 | s | IC CX23028 |
| ICA11 | 8-759-135-80 | s | IC UPC358C |
| ICA16 | 8-759-103-95 | s | IC UPC648C |
| ICB1 | 8-759-745-58 | s | IC NJM4558D |
| ICB4 | 8-759-135-80 | s | IC UPC358C |
| ICB5 | 8-759-916-16 | s | IC MC74HC08AN |
| ICB6 | 8-759-921-08 | s | IC SN74HC02N |
| ICB7 | 8-759-101-83 | s | IC UPC649C |
| ICB9 | 8-759-101-83 | s | IC UPC649C |
| ICB15 | 8-759-148-56 | s | IC UPD78C10AGQ-36 |
| ICC1 | 8-759-981-96 | s | IC RC4560D |
| ICC4 | 8-759-103-19 | s | IC UPC319C |
| ICC5 | 8-759-239-75 | s | IC TC74HC4520AP |
| ICC6 | 8-759-503-91 | s | IC TL082CP |
| ICC7 | 8-759-140-53 | s | IC MC14053BCP |
| ICC9 | 8-759-140-53 | s | IC MC14053BCP |
| ICC11 | 8-759-503-91 | s | IC TL082CP |
| ICD1 | 8-759-981-96 | s | IC RC4560D |
| ICD4 | 8-759-745-58 | s | IC NJM4558D |
| ICD7 | 8-759-503-91 | s | IC TL082CP |
| ICD9 | 8-759-503-91 | s | IC TL082CP |
| ICD13 | 8-759-916-50 | s | IC SN74HC157N |
| ICD14 | 8-759-917-06 | s | IC SN74HC574N |
| ICD15 | 8-759-921-50 | s | IC SN74HC573N |
| ICD16 | 8-759-921-34 | s | IC SN74HC245N |
| ICD17 | 8-759-921-34 | s | IC SN74HC245N |
| ICE1 | 8-759-503-91 | s | IC TL082CP |
| ICE2 | 8-759-503-91 | s | IC TL082CP |
| ICE4 | 8-759-000-47 | s | IC MC14051BCP |
| ICE5 | 8-759-503-91 | s | IC TL082CP |
| ICE6 | 8-759-503-91 | s | IC TL082CP |
| ICE8 | 8-759-000-47 | s | IC MC14051BCP |
| ICE9 | 8-759-135-80 | s | IC UPC358C |
| ICE10 | 8-759-135-80 | s | IC UPC358C |
| ICE11 | 8-759-135-80 | s | IC UPC358C |
| ICE13 | 8-759-916-25 | s | IC SN74HC32N |
| ICE15 | 8-759-730-36 | s | IC 27C64-V2H1-0-0, EPROM |
| ICE16 | 8-759-057-03 | s | IC SRM2016C12 |
| ICE17 | 8-759-916-50 | s | IC SN74HC157N |

(SV-90 BOARD)

| Ref. No. or Q'ty | Part No. | SP | Description |
|---|---|---|---|
| ICF1 | 8-759-503-91 | s | IC TL082CP |
| ICF2 | 8-759-503-91 | s | IC TL082CP |
| ICF5 | 8-759-503-91 | s | IC TL082CP |
| ICF6 | 8-759-503-91 | s | IC TL082CP |
| ICF9 | 8-759-000-48 | s | IC MC14052BCP |
| ICF10 | 8-759-000-47 | s | IC MC14051BCP |
| ICF11 | 8-759-000-47 | s | IC MC14051BCP |
| ICF13 | 8-759-916-12 | s | IC SN74HC00N |
| ICF17 | 8-759-916-50 | s | IC SN74HC157N |
| ICG2 | 8-759-135-80 | s | IC UPC358C |
| ICG4 | 8-759-135-80 | s | IC UPC358C |
| ICG6 | 8-759-916-14 | s | IC SN74HC04N |
| ICG7 | 8-759-916-65 | s | IC SN74HC240N |
| ICG11 | 8-759-645-17 | s | IC M54517P |
| ICG13 | 8-759-937-62 | s | IC CF77049N |
| ICG15 | 8-759-938-68 | s | IC CXD1095Q |
| ICH5 | 8-759-916-92 | s | IC SN74HC367AN |
| ICH6 | 8-759-910-43 | s | IC CX23028 |
| ICH7 | 8-759-910-43 | s | IC CX23028 |
| ICH8 | 8-759-239-75 | s | IC TC74HC4520AP |
| ICH9 | 8-759-906-24 | s | IC SN74LS624N |
| ICH10 | 8-759-921-08 | s | IC SN74HC02N |
| ICH11 | 8-759-340-46 | s | IC HD14046BP |
| ICH19 | 8-759-916-20 | s | IC SN74HC14N |
| ICJ2 | 8-759-938-68 | s | IC CXD1095Q |
| ICJ6 | 8-759-921-10 | s | IC SN74HC86N |
| ICJ7 | 8-759-916-29 | s | IC SN74HC74N |
| ICJ8 | 8-759-916-16 | s | IC MC74HC08AN |
| ICJ9 | 8-759-916-29 | s | IC SN74HC74N |
| ICJ10 | 8-759-917-11 | s | IC SN74HC393N |
| ICJ11 | 8-759-916-12 | s | IC SN74HC00N |
| ICJ12 | 8-759-916-29 | s | IC SN74HC74N |
| ICJ19 | 8-759-916-14 | s | IC SN74HC04N |
| ICJ20 | 8-759-916-29 | s | IC SN74HC74N |
| ICK1 | 8-759-917-43 | s | IC SN74HC138N |
| ICK2 | 8-759-916-71 | s | IC SN74HC244N |
| ICK3 | 8-759-917-43 | s | IC SN74HC138N |
| ICK4 | 8-759-917-43 | s | IC SN74HC138N |
| ICK5 | 8-759-917-43 | s | IC SN74HC138N |
| ICK6 | 8-759-917-43 | s | IC SN74HC138N |
| ICK7 | 8-759-916-19 | s | IC SN74HC11N |
| ICK8 | 8-759-921-08 | s | IC SN74HC02N |
| ICK9 | 8-759-239-75 | s | IC TC74HC4520AP |
| ICK10 | 8-759-916-55 | s | IC SN74HC175N |
| ICK11 | 8-759-916-29 | s | IC SN74HC74N |
| ICK12 | 8-759-921-19 | s | IC SN74HC161N |
| ICK13 | 8-759-916-71 | s | IC SN74HC244N |
| ICK14 | 8-759-917-11 | s | IC SN74HC393N |
| ICK19 | 8-752-800-46 | s | IC CXQ70108P-8 |
| ICL1 | 8-759-921-50 | s | IC SN74HC573N |
| ICL2 | 8-759-921-50 | s | IC SN74HC573N |
| ICL3 | 8-759-914-41 | s | IC X2212P |
| ICL4 | 8-759-921-17 | s | IC MC74HC153N |
| ICL5 | 8-759-916-12 | s | IC SN74HC00N |
| ICL6 | 8-759-916-14 | s | IC SN74HC04N |
| ICL7 | 8-759-239-75 | s | IC TC74HC4520AP |
| ICL8 | 8-759-916-14 | s | IC SN74HC04N |
| ICL9 | 8-759-916-16 | s | IC MC74HC08AN |

(SV-90 BOARD)

| Ref. No. or Q'ty | Part No. | SP | Description |
|---|---|---|---|
| ICL10 | 8-759-239-75 | s | IC TC74HC4520AP |
| ICL11 | 8-759-916-14 | s | IC SN74HC04N |
| ICL12 | 8-752-806-91 | s | IC CXQ71054P |
| ICL14 | 8-759-917-11 | s | IC SN74HC393N |
| ICL16 | 8-759-105-76 | s | IC UPD71059C |
| ICM1 | 8-759-921-34 | s | IC SN74HC245N |
| ICM2 | 8-759-921-34 | s | IC SN74HC245N |
| ICM3 | 8-759-917-43 | s | IC SN74HC138N |
| ICM4 | 8-759-916-46 | s | IC SN74HC139N |
| ICM5 | 8-759-916-16 | s | IC MC74HC08AN |
| ICM6 | 8-759-916-25 | s | IC SN74HC32N |
| ICM7 | 8-759-916-12 | s | IC SN74HC00N |
| ICM8 | 8-759-916-16 | s | IC MC74HC08AN |
| ICM9 | 8-759-916-29 | s | IC SN74HC74N |
| ICM10 | 8-759-916-29 | s | IC SN74HC74N |
| ICM14 | 8-759-917-11 | s | IC SN74HC393N |
| ICM17 | 8-759-916-92 | s | IC SN74HC367AN |
| ICM19 | 8-759-107-56 | s | IC CXQ71011P |
| ICN1 | 8-759-916-71 | s | IC SN74HC244N |
| ICN2 | 8-759-916-29 | s | IC SN74HC74N |
| ICN3 | 8-759-053-80 | s | IC 27C256-V1H1-2-2 |
| ICN5 | 8-759-053-79 | s | IC 27C256-V0H1-2-2 |
| ICN7 | 8-759-514-31 | s | IC CXK5864BP-12LL |
| ICN8 | 8-759-938-83 | s | IC CF77074NT |
| ICN9 | 8-759-938-83 | s | IC CF77074NT |
| ICN11 | 8-759-938-83 | s | IC CF77074NT |
| ICN12 | 8-752-806-91 | s | IC CXQ71054P |
| ICN14 | 8-752-806-91 | s | IC CXQ71054P |
| ICN15 | 8-752-806-91 | s | IC CXQ71054P |
| ICN17 | 8-752-806-91 | s | IC CXQ71054P |
| ICN19 | 8-752-806-91 | s | IC CXQ71054P |
| L1 | 1-408-421-00 | s | INDUCTOR 100uH |
| L2 | 1-421-370-00 | s | COIL, CHOKE |
| L3 | 1-421-370-00 | s | COIL, CHOKE |
| L5 | 1-421-370-00 | s | COIL, CHOKE |
| Q1 | 8-729-900-80 | s | TRANSISTOR DTC114ES |
| Q2 | 8-729-119-76 | s | TRANSISTOR 2SA1115P |
| Q3 | 8-729-697-92 | s | TRANSISTOR 2SA979-G |
| R1 | 1-215-432-00 | s | METAL 3K 1% 1/6W |
| R1 | 1-249-437-11 | s | CARBON 47K 5% 1/4W |
| R2 | 1-215-445-00 | s | METAL 10K 1% 1/6W |
| R2 | 1-249-437-11 | s | CARBON 47K 5% 1/4W |
| R3 | 1-215-445-00 | s | METAL 10K 1% 1/6W |
| R3 | 1-215-452-00 | s | METAL 20K 1% 1/6W |
| R4 | 1-215-457-00 | s | METAL 33K 1% 1/6W |
| R4 | 1-249-413-11 | s | CARBON 470 5% 1/4W |
| R5 | 1-215-445-00 | s | METAL 10K 1% 1/6W |
| R5 | 1-215-457-00 | s | METAL 33K 1% 1/6W |
| R6 | 1-215-441-00 | s | METAL 6.8K 1% 1/6W |
| R6 | 1-215-464-00 | s | METAL 62K 1% 1/6W |
| R7 | 1-215-437-00 | s | METAL 4.7K 1% 1/6W |
| R7 | 1-215-451-00 | s | METAL 18K 1% 1/6W |
| R8 | 1-215-445-00 | s | METAL 10K 1% 1/6W |
| R9 | 1-215-436-00 | s | METAL 4.3K 1% 1/6W |
| R10 | 1-215-414-00 | s | METAL 510 1% 1/6W |
| R11 | 1-249-425-11 | s | CARBON 4.7K 5% 1/4W |
| R12 | 1-249-425-11 | s | CARBON 4.7K 5% 1/4W |
| R13 | 1-249-441-11 | s | CARBON 100K 5% 1/4W |

(SV-90 BOARD)

| Ref. No. or Q'ty | Part No. | SP | Description |
|---|---|---|---|
| R14 | 1-249-417-11 | s | CARBON 1K 5% 1/4W |
| R15 | 1-215-447-00 | s | METAL 12K 1% 1/6W |
| R16 | 1-247-887-00 | s | CARBON 220K 5% 1/4W |
| R17 | 1-215-445-00 | s | METAL 10K 1% 1/6W |
| R18 | 1-215-453-00 | s | METAL 22K 1% 1/6W |
| R19 | 1-215-445-00 | s | METAL 10K 1% 1/6W |
| R20 | 1-215-453-00 | s | METAL 22K 1% 1/6W |
| R21 | 1-215-447-00 | s | METAL 12K 1% 1/6W |
| R22 | 1-249-429-11 | s | CARBON 10K 5% 1/4W |
| R23 | 1-249-429-11 | s | CARBON 10K 5% 1/4W |
| R24 | 1-215-411-00 | s | METAL 390 1% 1/6W |
| R25 | 1-215-406-00 | s | METAL 240 1% 1/6W |
| R26 | 1-249-425-11 | s | CARBON 4.7K 5% 1/4W |
| R27 | 1-249-425-11 | s | CARBON 4.7K 5% 1/4W |
| R28 | 1-249-441-11 | s | CARBON 100K 5% 1/4W |
| R29 | 1-249-441-11 | s | CARBON 100K 5% 1/4W |
| R30 | 1-249-417-11 | s | CARBON 1K 5% 1/4W |
| R31 | 1-215-447-00 | s | METAL 12K 1% 1/6W |
| R32 | 1-247-887-00 | s | CARBON 220K 5% 1/4W |
| R33 | 1-215-445-00 | s | METAL 10K 1% 1/6W |
| R34 | 1-215-453-00 | s | METAL 22K 1% 1/6W |
| R35 | 1-215-445-00 | s | METAL 10K 1% 1/6W |
| R36 | 1-215-453-00 | s | METAL 22K 1% 1/6W |
| R37 | 1-215-447-00 | s | METAL 12K 1% 1/6W |
| R38 | 1-249-429-11 | s | CARBON 10K 5% 1/4W |
| R39 | 1-249-429-11 | s | CARBON 10K 5% 1/4W |
| R40 | 1-249-393-11 | s | CARBON 10 5% 1/4W |
| R41 | 1-215-425-00 | s | METAL 1.5K 1% 1/6W |
| R42 | 1-247-891-00 | s | CARBON 330K 5% 1/4W |
| R43 | 1-215-425-00 | s | METAL 1.5K 1% 1/6W |
| R44 | 1-215-418-00 | s | METAL 750 1% 1/6W |
| R45 | 1-215-452-00 | s | METAL 20K 1% 1/6W |
| R46 | 1-215-452-00 | s | METAL 20K 1% 1/6W |
| R47 | 1-249-417-11 | s | CARBON 1K 5% 1/4W |
| R48 | 1-249-417-11 | s | CARBON 1K 5% 1/4W |
| R49 | 1-249-427-11 | s | CARBON 6.8K 5% 1/4W |
| R50 | 1-249-429-11 | s | CARBON 10K 5% 1/4W |
| R51 | 1-249-441-11 | s | CARBON 100K 5% 1/4W |
| R52 | 1-249-429-11 | s | CARBON 10K 5% 1/4W |
| R53 | 1-249-429-11 | s | CARBON 10K 5% 1/4W |
| R54 | 1-249-423-11 | s | CARBON 3.3K 5% 1/4W |
| R55 | 1-249-420-11 | s | CARBON 1.8K 5% 1/4W |
| R56 | 1-249-441-11 | s | CARBON 100K 5% 1/4W |
| R57 | 1-249-441-11 | s | CARBON 100K 5% 1/4W |
| R58 | 1-249-417-11 | s | CARBON 1K 5% 1/4W |
| R59 | 1-215-439-00 | s | METAL 5.6K 1% 1/6W |
| R60 | 1-215-439-00 | s | METAL 5.6K 1% 1/6W |
| R61 | 1-215-425-00 | s | METAL 1.5K 1% 1/6W |
| R62 | 1-215-453-00 | s | METAL 22K 1% 1/6W |
| R63 | 1-247-887-00 | s | CARBON 220K 5% 1/4W |
| R64 | 1-215-461-00 | s | METAL 47K 1% 1/6W |
| R65 | 1-215-447-00 | s | METAL 12K 1% 1/6W |
| R66 | 1-249-421-11 | s | CARBON 2.2K 5% 1/4W |
| R67 | 1-215-442-00 | s | METAL 7.5K 1% 1/6W |
| R68 | 1-249-433-11 | s | CARBON 22K 5% 1/4W |
| R69 | 1-215-457-00 | s | METAL 33K 1% 1/6W |
| R70 | 1-249-421-11 | s | CARBON 2.2K 5% 1/4W |
| R71 | 1-249-421-11 | s | CARBON 2.2K 5% 1/4W |
| R72 | 1-215-433-00 | s | METAL 3.3K 1% 1/6W |

(SV-90 BOARD)

| Ref. No. or Q'ty | Part No. | SP | Description |
|---|---|---|---|
| R73 | 1-249-429-11 | s | CARBON 10K 5% 1/4W |
| R74 | 1-215-445-00 | s | METAL 10K 1% 1/6W |
| R75 | 1-249-423-11 | s | CARBON 3.3K 5% 1/4W |
| R76 | 1-249-409-11 | s | CARBON 220 5% 1/4W |
| R77 | 1-249-421-11 | s | CARBON 2.2K 5% 1/4W |
| R78 | 1-215-449-00 | s | METAL 15K 1% 1/6W |
| R79 | 1-215-445-00 | s | METAL 10K 1% 1/6W |
| R80 | 1-247-891-00 | s | CARBON 330K 5% 1/4W |
| R81 | 1-215-457-00 | s | METAL 33K 1% 1/6W |
| R82 | 1-249-433-11 | s | CARBON 22K 5% 1/4W |
| R83 | 1-215-437-00 | s | METAL 4.7K 1% 1/6W |
| R84 | 1-249-435-11 | s | CARBON 33K 5% 1/4W |
| R85 | 1-249-429-11 | s | CARBON 10K 5% 1/4W |
| R86 | 1-247-804-11 | s | CARBON 75 5% 1/4W |
| R87 | 1-249-417-11 | s | CARBON 1K 5% 1/4W |
| R88 | 1-215-439-00 | s | METAL 5.6K 1% 1/6W |
| R89 | 1-215-439-00 | s | METAL 5.6K 1% 1/6W |
| R90 | 1-215-425-00 | s | METAL 1.5K 1% 1/6W |
| R91 | 1-215-453-00 | s | METAL 22K 1% 1/6W |
| R92 | 1-215-461-00 | s | METAL 47K 1% 1/6W |
| R93 | 1-215-447-00 | s | METAL 12K 1% 1/6W |
| R94 | 1-247-887-00 | s | CARBON 220K 5% 1/4W |
| R95 | 1-249-393-11 | s | CARBON 10 5% 1/4W |
| R96 | 1-249-409-11 | s | CARBON 220 5% 1/4W |
| R97 | 1-249-409-11 | s | CARBON 220 5% 1/4W |
| R98 | 1-249-409-11 | s | CARBON 220 5% 1/4W |
| R99 | 1-249-409-11 | s | CARBON 220 5% 1/4W |
| R100 | 1-249-409-11 | s | CARBON 220 5% 1/4W |
| R101 | 1-249-409-11 | s | CARBON 220 5% 1/4W |
| R102 | 1-249-409-11 | s | CARBON 220 5% 1/4W |
| R103 | 1-215-445-00 | s | METAL 10K 1% 1/6W |
| R104 | 1-215-445-00 | s | METAL 10K 1% 1/6W |
| R105 | 1-215-445-00 | s | METAL 10K 1% 1/6W |
| R106 | 1-215-445-00 | s | METAL 10K 1% 1/6W |
| R107 | 1-215-442-00 | s | METAL 7.5K 1% 1/6W |
| R108 | 1-249-409-11 | s | CARBON 220 5% 1/4W |
| R109 | 1-249-409-11 | s | CARBON 220 5% 1/4W |
| R110 | 1-249-409-11 | s | CARBON 220 5% 1/4W |
| R111 | 1-249-409-11 | s | CARBON 220 5% 1/4W |
| R112 | 1-249-409-11 | s | CARBON 220 5% 1/4W |
| R113 | 1-249-409-11 | s | CARBON 220 5% 1/4W |
| R114 | 1-249-409-11 | s | CARBON 220 5% 1/4W |
| R115 | 1-249-409-11 | s | CARBON 220 5% 1/4W |
| R116 | 1-249-429-11 | s | CARBON 10K 5% 1/4W |
| R117 | 1-249-429-11 | s | CARBON 10K 5% 1/4W |
| R118 | 1-249-429-11 | s | CARBON 10K 5% 1/4W |
| R119 | 1-249-413-11 | s | CARBON 470 5% 1/4W |
| R120 | 1-249-429-11 | s | CARBON 10K 5% 1/4W |
| R121 | 1-249-437-11 | s | CARBON 47K 5% 1/4W |
| R122 | 1-249-416-11 | s | CARBON 820 5% 1/4W |
| R123 | 1-249-429-11 | s | CARBON 10K 5% 1/4W |
| R124 | 1-249-429-11 | s | CARBON 10K 5% 1/4W |
| R125 | 1-249-416-11 | s | CARBON 820 5% 1/4W |
| R126 | 1-249-429-11 | s | CARBON 10K 5% 1/4W |
| R127 | 1-249-425-11 | s | CARBON 4.7K 5% 1/4W |
| R128 | 1-249-425-11 | s | CARBON 4.7K 5% 1/4W |
| R129 | 1-249-425-11 | s | CARBON 4.7K 5% 1/4W |
| R130 | 1-249-425-11 | s | CARBON 4.7K 5% 1/4W |
| R131 | 1-249-425-11 | s | CARBON 4.7K 5% 1/4W |

(SV-90 BOARD)

| Ref. No. or Q'ty | Part No. | SP | Description |
|---|---|---|---|
| R132 | 1-249-425-11 | s | CARBON 4.7K 5% 1/4W |
| R133 | 1-249-425-11 | s | CARBON 4.7K 5% 1/4W |
| R134 | 1-249-433-11 | s | CARBON 22K 5% 1/4W |
| R135 | 1-249-433-11 | s | CARBON 22K 5% 1/4W |
| R136 | 1-249-433-11 | s | CARBON 22K 5% 1/4W |
| R137 | 1-249-433-11 | s | CARBON 22K 5% 1/4W |
| R138 | 1-249-433-11 | s | CARBON 22K 5% 1/4W |
| R139 | 1-249-433-11 | s | CARBON 22K 5% 1/4W |
| R140 | 1-249-433-11 | s | CARBON 22K 5% 1/4W |
| R141 | 1-215-455-00 | s | METAL 27K 1% 1/6W |
| R142 | 1-215-479-00 | s | METAL 270K 1% 1/6W |
| R143 | 1-215-427-00 | s | METAL 1.8K 1% 1/6W |
| R144 | 1-215-477-00 | s | METAL 220K 1% 1/6W |
| R145 | 1-215-445-00 | s | METAL 10K 1% 1/6W |
| R146 | 1-215-461-00 | s | METAL 47K 1% 1/6W |
| R147 | 1-215-437-00 | s | METAL 4.7K 1% 1/6W |
| R148 | 1-215-437-00 | s | METAL 4.7K 1% 1/6W |
| R149 | 1-249-429-11 | s | CARBON 10K 5% 1/4W |
| R150 | 1-249-436-11 | s | CARBON 39K 5% 1/4W |
| R151 | 1-215-456-00 | s | METAL 30K 1% 1/6W |
| R152 | 1-215-456-00 | s | METAL 30K 1% 1/6W |
| R153 | 1-215-443-00 | s | METAL 8.2K 1% 1/6W |
| R154 | 1-215-442-00 | s | METAL 7.5K 1% 1/6W |
| R155 | 1-215-451-00 | s | METAL 18K 1% 1/6W |
| R156 | 1-215-445-00 | s | METAL 10K 1% 1/6W |
| R157 | 1-215-449-00 | s | METAL 15K 1% 1/6W |
| R158 | 1-249-416-11 | s | CARBON 820 5% 1/4W |
| R159 | 1-249-425-11 | s | CARBON 4.7K 5% 1/4W |
| R160 | 1-249-437-11 | s | CARBON 47K 5% 1/4W |
| R161 | 1-249-409-11 | s | CARBON 220 5% 1/4W |
| R162 | 1-249-429-11 | s | CARBON 10K 5% 1/4W |
| R163 | 1-249-433-11 | s | CARBON 22K 5% 1/4W |
| R164 | 1-249-429-11 | s | CARBON 10K 5% 1/4W |
| R165 | 1-249-421-11 | s | CARBON 2.2K 5% 1/4W |
| R166 | 1-249-423-11 | s | CARBON 3.3K 5% 1/4W |
| R167 | 1-249-417-11 | s | CARBON 1K 5% 1/4W |
| R168 | 1-249-433-11 | s | CARBON 22K 5% 1/4W |
| R169 | 1-249-433-11 | s | CARBON 22K 5% 1/4W |
| R170 | 1-249-433-11 | s | CARBON 22K 5% 1/4W |
| R171 | 1-249-429-11 | s | CARBON 10K 5% 1/4W |
| R172 | 1-249-437-11 | s | CARBON 47K 5% 1/4W |
| R173 | 1-249-411-11 | s | CARBON 330 5% 1/4W |
| R174 | 1-249-433-11 | s | CARBON 22K 5% 1/4W |
| R176 | 1-249-393-11 | s | CARBON 10 5% 1/4W |
| R178 | 1-249-401-11 | s | CARBON 47 5% 1/4W |
| R179 | 1-249-401-11 | s | CARBON 47 5% 1/4W |
| R181 | 1-249-401-11 | s | CARBON 47 5% 1/4W |
| R182 | 1-249-401-11 | s | CARBON 47 5% 1/4W |
| R183 | 1-249-401-11 | s | CARBON 47 5% 1/4W |
| R184 | 1-249-401-11 | s | CARBON 47 5% 1/4W |
| R185 | 1-249-401-11 | s | CARBON 47 5% 1/4W |
| R186 | 1-249-437-11 | s | CARBON 47K 5% 1/4W |
| R187 | 1-249-411-11 | s | CARBON 330 5% 1/4W |
| R188 | 1-249-437-11 | s | CARBON 47K 5% 1/4W |
| R189 | 1-249-401-11 | s | CARBON 47 5% 1/4W |
| R190 | 1-249-421-11 | s | CARBON 2.2K 5% 1/4W |
| R191 | 1-249-401-11 | s | CARBON 47 5% 1/4W |
| R192 | 1-249-401-11 | s | CARBON 47 5% 1/4W |
| R193 | 1-249-401-11 | s | CARBON 47 5% 1/4W |

(SV-90 BOARD)

| Ref. No. or Q'ty | Part No. | SP | Description |
|---|---|---|---|
| R194 | 1-249-401-11 | s | CARBON 47 5% 1/4W |
| R195 | 1-249-401-11 | s | CARBON 47 5% 1/4W |
| R196 | 1-249-401-11 | s | CARBON 47 5% 1/4W |
| R197 | 1-249-401-11 | s | CARBON 47 5% 1/4W |
| R198 | 1-249-401-11 | s | CARBON 47 5% 1/4W |
| R199 | 1-249-401-11 | s | CARBON 47 5% 1/4W |
| R202 | 1-249-417-11 | s | CARBON 1K 5% 1/4W |
| R203 | 1-249-401-11 | s | CARBON 47 5% 1/4W |
| R204 | 1-249-401-11 | s | CARBON 47 5% 1/4W |
| R205 | 1-249-401-11 | s | CARBON 47 5% 1/4W |
| R206 | 1-249-401-11 | s | CARBON 47 5% 1/4W |
| R207 | 1-249-401-11 | s | CARBON 47 5% 1/4W |
| R208 | 1-249-401-11 | s | CARBON 47 5% 1/4W |
| R209 | 1-249-401-11 | s | CARBON 47 5% 1/4W |
| R210 | 1-249-401-11 | s | CARBON 47 5% 1/4W |
| R214 | 1-249-433-11 | s | CARBON 22K 5% 1/4W |
| R215 | 1-249-401-11 | s | CARBON 47 5% 1/4W |
| R216 | 1-249-401-11 | s | CARBON 47 5% 1/4W |
| R217 | 1-249-401-11 | s | CARBON 47 5% 1/4W |
| R218 | 1-249-401-11 | s | CARBON 47 5% 1/4W |
| R219 | 1-249-401-11 | s | CARBON 47 5% 1/4W |
| R220 | 1-215-432-00 | s | METAL 3K 1% 1/6W |
| R221 | 1-249-429-11 | s | CARBON 10K 5% 1/4W |
| R222 | 1-249-441-11 | s | CARBON 100K 5% 1/4W |
| R223 | 1-249-423-11 | s | CARBON 3.3K 5% 1/4W |
| R224 | 1-249-433-11 | s | CARBON 22K 5% 1/4W |
| R225 | 1-249-433-11 | s | CARBON 22K 5% 1/4W |
| R226 | 1-249-429-11 | s | CARBON 10K 5% 1/4W |
| R227 | 1-249-429-11 | s | CARBON 10K 5% 1/4W |
| R228 | 1-249-429-11 | s | CARBON 10K 5% 1/4W |
| R229 | 1-249-433-11 | s | CARBON 22K 5% 1/4W |
| R230 | 1-249-393-11 | s | CARBON 10 5% 1/4W |
| R231 | 1-249-433-11 | s | CARBON 22K 5% 1/4W |
| R232 | 1-249-433-11 | s | CARBON 22K 5% 1/4W |
| R233 | 1-247-883-00 | s | CARBON 150K 5% 1/4W |
| R234 | 1-249-416-11 | s | CARBON 820 5% 1/4W |
| R235 | 1-215-429-00 | s | METAL 2.2K 1% 1/6W |
| R236 | 1-215-445-00 | s | METAL 10K 1% 1/6W |
| R237 | 1-215-443-00 | s | METAL 8.2K 1% 1/6W |
| RB1 | 1-231-567-00 | s | RESISTOR BLOCK 10Kx2 |
| RB2 | 1-231-567-00 | s | RESISTOR BLOCK 10Kx2 |
| RB3 | 1-235-109-00 | s | RESISTOR BLOCK 22KX8 |
| RB4 | 1-235-109-00 | s | RESISTOR BLOCK 22KX8 |
| RB5 | 1-235-109-00 | s | RESISTOR BLOCK 22KX8 |
| RB6 | 1-235-005-00 | s | RESISTOR BLOCK 47Kx8 |
| RB7 | 1-235-109-00 | s | RESISTOR BLOCK 22KX8 |
| RB8 | 1-235-109-00 | s | RESISTOR BLOCK 22KX8 |
| RB9 | 1-235-005-00 | s | RESISTOR BLOCK 47Kx8 |
| RB10 | 1-235-005-00 | s | RESISTOR BLOCK 47Kx8 |
| RB11 | 1-235-005-00 | s | RESISTOR BLOCK 47Kx8 |
| RB12 | 1-231-401-00 | s | RESISTOR BLOCK 470x8 |
| RV1 | 1-237-512-21 | s | RES, ADJ, METAL 100 |
| RV2 | 1-237-519-21 | s | RES, ADJ, METAL 20K |
| RV3 | 1-237-515-21 | s | RES, ADJ, METAL 1K |
| S1 | 1-553-441-00 | s | SWITCH, TOGGLE |
| S2 | 1-552-539-00 | s | SWITCH, TACTILE |
| S3 | 1-552-539-00 | s | SWITCH, TACTILE |

(SV-90 BOARD)

| Ref. No. or Q'ty | Part No. | SP | Description |
|---|---|---|---|
| X2 | 1-567-798-12 | s | CRYSTAL 14.7456MHz |

## SW-269 BOARD

| Ref. No. or Q'ty | Part No. | SP | Description |
|---|---|---|---|
| 1pc | A-6026-100-A | o | MOUNTED CIRCUIT BOARD, SW-269 |
| 10pcs | 3-731-471-02 | o | HOLDER (A), LED |
| 2pcs | 3-670-095-00 | o | HOLDER, LED |
| C1 | 1-161-485-00 | s | CERAMIC 0.1uF 50V |
| C2 | 1-124-570-11 | s | ELECT 220uF 20% 16V |
| C3 | 1-124-570-11 | s | ELECT 220uF 20% 16V |
| C4 | 1-124-570-11 | s | ELECT 220uF 20% 16V |
| C5 | 1-161-485-00 | s | CERAMIC 0.1uF 50V |
| C6 | 1-124-570-11 | s | ELECT 220uF 20% 16V |
| C7 | 1-124-570-11 | s | ELECT 220uF 20% 16V |
| C8 | 1-161-485-00 | s | CERAMIC 0.1uF 50V |
| C9 | 1-161-485-00 | s | CERAMIC 0.1uF 50V |
| C10 | 1-161-485-00 | s | CERAMIC 0.1uF 50V |
| C11 | 1-126-516-11 | s | ELECT 120uF 20% 16V |
| C12 | 1-162-871-11 | s | CERAMIC 47PF 5% 50V |
| CN821 | 1-565-691-11 | o | CONNECTOR, PS 20P, MALE |
| D1 | 1-808-974-11 | s | LED ARRAY(16-SEG), RED-ORG-GRN |
| D2 | 1-808-974-11 | s | LED ARRAY(16-SEG), RED-ORG-GRN |
| D3 | 1-808-974-11 | s | LED ARRAY(16-SEG), RED-ORG-GRN |
| D4 | 1-808-974-11 | s | LED ARRAY(16-SEG), RED-ORG-GRN |
| D5 | 1-808-974-11 | s | LED ARRAY(16-SEG), RED-ORG-GRN |
| D6 | 1-808-974-11 | s | LED ARRAY(16-SEG), RED-ORG-GRN |
| D7 | 1-808-974-11 | s | LED ARRAY(16-SEG), RED-ORG-GRN |
| D8 | 1-808-974-11 | s | LED ARRAY(16-SEG), RED-ORG-GRN |
| D9 | 1-808-974-11 | s | LED ARRAY(16-SEG), RED-ORG-GRN |
| D10 | 1-808-974-11 | s | LED ARRAY(16-SEG), RED-ORG-GRN |
| D11 | 8-719-905-56 | s | LED EBR5504S, RED |
| D12 | 8-719-905-56 | s | LED EBR5504S, RED |
| D13 | 8-719-911-19 | s | DIODE 1SS119 |
| D14 | 8-719-911-19 | s | DIODE 1SS119 |
| D15 | 8-719-911-19 | s | DIODE 1SS119 |
| D16 | 8-719-911-19 | s | DIODE 1SS119 |
| D17 | 8-719-911-19 | s | DIODE 1SS119 |
| IC1 | 8-759-926-77 | s | IC SN74HC541NS |
| IC2 | 8-759-935-66 | s | IC SN74AS534N |
| IC3 | 8-759-935-66 | s | IC SN74AS534N |
| IC4 | 8-759-935-66 | s | IC SN74AS534N |
| IC5 | 8-759-926-79 | s | IC SN74HC564NS |
| IC6 | 8-759-935-66 | s | IC SN74AS534N |
| IC7 | 8-759-935-66 | s | IC SN74AS534N |
| IC8 | 8-759-926-11 | s | IC SN74HC138NS |
| IC9 | 8-759-926-11 | s | IC SN74HC138NS |
| L1 | 1-421-329-00 | s | COIL, CHOKE |
| Q1 | 8-729-140-93 | s | TRANSISTOR 2SB733-34 |
| Q2 | 8-729-140-93 | s | TRANSISTOR 2SB733-34 |
| Q3 | 8-729-140-93 | s | TRANSISTOR 2SB733-34 |
| Q4 | 8-729-140-93 | s | TRANSISTOR 2SB733-34 |
| Q5 | 8-729-140-93 | s | TRANSISTOR 2SB733-34 |
| R1 | 1-214-519-00 | s | METAL 27 1% 1/8W |
| R2 | 1-214-519-00 | s | METAL 27 1% 1/8W |
| R3 | 1-214-519-00 | s | METAL 27 1% 1/8W |
| R4 | 1-214-523-00 | s | METAL 39 1% 1/8W |
| R5 | 1-214-523-00 | s | METAL 39 1% 1/8W |
| R6 | 1-214-519-00 | s | METAL 27 1% 1/8W |
| R7 | 1-214-519-00 | s | METAL 27 1% 1/8W |
| R8 | 1-214-525-00 | s | METAL 47 1% 1/8W |

(SW-269 BOARD)

| Ref. No. or Q'ty | Part No. | SP | Description |
|---|---|---|---|
| R9 | 1-214-525-00 | s | METAL 47 1% 1/8W |
| R10 | 1-214-525-00 | s | METAL 47 1% 1/8W |
| R11 | 1-214-525-00 | s | METAL 47 1% 1/8W |
| R12 | 1-214-525-00 | s | METAL 47 1% 1/8W |
| R13 | 1-214-525-00 | s | METAL 47 1% 1/8W |
| R14 | 1-214-525-00 | s | METAL 47 1% 1/8W |
| R15 | 1-214-525-00 | s | METAL 47 1% 1/8W |
| R16 | 1-214-525-00 | s | METAL 47 1% 1/8W |
| R17 | 1-214-529-00 | s | METAL 68 1% 1/8W |
| R18 | 1-214-533-00 | s | METAL 100 1% 1/8W |
| R19 | 1-214-525-00 | s | METAL 47 1% 1/8W |
| R20 | 1-214-525-00 | s | METAL 47 1% 1/8W |
| R21 | 1-214-525-00 | s | METAL 47 1% 1/8W |
| R22 | 1-214-525-00 | s | METAL 47 1% 1/8W |
| R23 | 1-214-525-00 | s | METAL 47 1% 1/8W |
| R24 | 1-214-545-00 | s | METAL 330 1% 1/8W |
| R25 | 1-214-545-00 | s | METAL 330 1% 1/8W |
| R26 | 1-214-545-00 | s | METAL 330 1% 1/8W |
| R27 | 1-214-525-00 | s | METAL 47 1% 1/8W |
| R28 | 1-214-525-00 | s | METAL 47 1% 1/8W |
| R29 | 1-214-525-00 | s | METAL 47 1% 1/8W |
| R30 | 1-214-525-00 | s | METAL 47 1% 1/8W |
| R31 | 1-214-525-00 | s | METAL 47 1% 1/8W |
| R32 | 1-214-525-00 | s | METAL 47 1% 1/8W |
| R33 | 1-214-525-00 | s | METAL 47 1% 1/8W |
| R34 | 1-214-525-00 | s | METAL 47 1% 1/8W |
| R35 | 1-214-545-00 | s | METAL 330 1% 1/8W |
| R36 | 1-214-525-00 | s | METAL 47 1% 1/8W |
| R37 | 1-214-529-00 | s | METAL 68 1% 1/8W |
| R38 | 1-214-533-00 | s | METAL 100 1% 1/8W |
| R39 | 1-214-525-00 | s | METAL 47 1% 1/8W |
| R40 | 1-214-525-00 | s | METAL 47 1% 1/8W |
| R41 | 1-214-525-00 | s | METAL 47 1% 1/8W |
| R42 | 1-214-525-00 | s | METAL 47 1% 1/8W |
| R43 | 1-214-525-00 | s | METAL 47 1% 1/8W |
| R44 | 1-214-545-00 | s | METAL 330 1% 1/8W |
| RB1 | 1-231-410-00 | s | RESISTOR BLOCK 10Kx8 |
| S11 | 1-554-048-00 | s | SWITCH, PUSH, WITH LED |
| S12 | 1-554-048-00 | s | SWITCH, PUSH, WITH LED |
| S13 | 1-554-048-00 | s | SWITCH, PUSH, WITH LED |
| S14 | 1-554-048-00 | s | SWITCH, PUSH, WITH LED |
| S15 | 1-554-048-00 | s | SWITCH, PUSH, WITH LED |
| S16 | 1-554-048-00 | s | SWITCH, PUSH, WITH LED |
| S17 | 1-554-048-00 | s | SWITCH, PUSH, WITH LED |
| S18 | 1-554-048-00 | s | SWITCH, PUSH, WITH LED |
| S21 | 1-554-048-00 | s | SWITCH, PUSH, WITH LED |
| S22 | 1-554-048-00 | s | SWITCH, PUSH, WITH LED |
| S23 | 1-554-048-00 | s | SWITCH, PUSH, WITH LED |
| S24 | 1-554-048-00 | s | SWITCH, PUSH, WITH LED |
| S25 | 1-554-048-00 | s | SWITCH, PUSH, WITH LED |
| S26 | 1-554-048-00 | s | SWITCH, PUSH, WITH LED |
| S27 | 1-554-048-00 | s | SWITCH, PUSH, WITH LED |
| S28 | 1-554-048-00 | s | SWITCH, PUSH, WITH LED |
| S31 | 1-554-048-00 | s | SWITCH, PUSH, WITH LED |
| S32 | 1-554-048-00 | s | SWITCH, PUSH, WITH LED |
| S33 | 1-554-048-00 | s | SWITCH, PUSH, WITH LED |

## SW-270 BOARD

| Ref. No. or Q'ty | Part No. | SP | Description |
|---|---|---|---|
| CN831 | 1-565-885-11 | o | CONNECTOR, PS 10P, MALE |
| D1 | 8-719-940-89 | s | LED SLP655B-50, RED, |
| D2 | 8-719-940-89 | s | LED SLP655B-50, RED, |
| D3 | 8-719-940-89 | s | LED SLP655B-50, RED, |
| IC1 | 8-759-645-16 | s | IC M54516P |
| R1 | 1-247-751-11 | s | CARBON 820 5% 1/2W |
| S1 | 1-516-961-00 | s | SWITCH, LEVER SLIDE |
| S2 | 1-516-961-00 | s | SWITCH, LEVER SLIDE |
| S3 | 1-516-961-00 | s | SWITCH, LEVER SLIDE |

## SY-103 BOARD

| Ref. No. or Q'ty | Part No. | SP | Description |
|---|---|---|---|
| 1pc | A-6017-151-A | o | MOUNTED CIRCUIT BOARD, SY-103 |
| 1pc | 7-628-254-40 | s | SCREW +PS 2.6X12 |
| 1pc | 4-812-134-11 | s | RIVET NYLON, 3.5 |
| 1pc | 7-628-254-40 | s | SCREW +PS 2.6X12 |
| 1pc | 4-812-134-11 | s | RIVET NYLON, 3.5 |
| 2pcs | 7-628-254-40 | s | SCREW +PS 2.6X12 |
| 4pcs | 7-622-207-05 | s | N 2.6, TYPE 2 |
| 2pcs | 3-714-634-01 | o | LEVER, PC BOARD |
| 9pcs | 7-682-948-01 | s | SCREW +PSW 3X8 |
| 2pcs | 7-685-533-19 | s | SCREW +BTP 2.6X6 TYPE2 N-S |
| 2pcs | 3-714-691-01 | o | PIN, SPRING |
| C1 | 1-124-566-11 | s | ELECT 120uF 20% 6.3V |
| C2 | 1-124-566-11 | s | ELECT 120uF 20% 6.3V |
| C3 | 1-124-587-11 | s | ELECT 220uF 20% 6.3V |
| C4 | 1-161-055-00 | s | CERAMIC 0.022uF 10% 50V |
| C5 | 1-161-055-00 | s | CERAMIC 0.022uF 10% 50V |
| C6 | 1-124-943-11 | s | ELECT 39 20% 25V |
| C7 | 1-161-055-00 | s | CERAMIC 0.022uF 10% 50V |
| C8 | 1-124-943-11 | s | ELECT 39 20% 25V |
| C13 | 1-161-055-00 | s | CERAMIC 0.022uF 10% 50V |
| C14 | 1-107-210-00 | s | MICA 22PF 5% 500V |
| C15 | 1-107-210-00 | s | MICA 22PF 5% 500V |
| C16 | 1-161-055-00 | s | CERAMIC 0.022uF 10% 50V |
| C17 | 1-161-055-00 | s | CERAMIC 0.022uF 10% 50V |
| C18 | 1-161-055-00 | s | CERAMIC 0.022uF 10% 50V |
| C19 | 1-161-055-00 | s | CERAMIC 0.022uF 10% 50V |
| C20 | 1-130-471-00 | s | MYLAR 0.001uF 5% 50V |
| C24 | 1-107-026-00 | s | MICA 5.1PF 500V |
| C25 | 1-107-026-00 | s | MICA 5.1PF 500V |
| C26 | 1-107-026-00 | s | MICA 5.1PF 500V |
| C27 | 1-107-026-00 | s | MICA 5.1PF 500V |
| C28 | 1-107-026-00 | s | MICA 5.1PF 500V |
| C29 | 1-107-026-00 | s | MICA 5.1PF 500V |
| C30 | 1-107-026-00 | s | MICA 5.1PF 500V |
| C31 | 1-107-026-00 | s | MICA 5.1PF 500V |
| C32 | 1-107-026-00 | s | MICA 5.1PF 500V |
| C33 | 1-107-026-00 | s | MICA 5.1PF 500V |
| C34 | 1-107-026-00 | s | MICA 5.1PF 500V |
| C37 | 1-131-381-00 | s | TANTALUM 47uF 10% 10V |
| C38 | 1-125-445-11 | s | DOUBLE LAYERS 0.22 5.5V |
| C39 | 1-130-471-00 | s | MYLAR 0.001uF 5% 50V |
| C40 | 1-130-473-00 | s | MYLAR 0.0015uF 5% 50V |
| C41 | 1-131-363-00 | s | TANTALUM 4.7uF 10% 20V |
| C42 | 1-126-162-11 | s | ELECT 3.3uF 20% 50V |
| C43 | 1-130-471-00 | s | MYLAR 0.001uF 5% 50V |
| C45 | 1-107-026-00 | s | MICA 5.1PF 500V |
| C48 | 1-161-055-00 | s | CERAMIC 0.022uF 10% 50V |
| C49 | 1-161-055-00 | s | CERAMIC 0.022uF 10% 50V |
| C50 | 1-161-055-00 | s | CERAMIC 0.022uF 10% 50V |
| C53 | 1-161-055-00 | s | CERAMIC 0.022uF 10% 50V |
| C54 | 1-161-055-00 | s | CERAMIC 0.022uF 10% 50V |
| C55 | 1-161-055-00 | s | CERAMIC 0.022uF 10% 50V |
| C56 | 1-161-055-00 | s | CERAMIC 0.022uF 10% 50V |
| C57 | 1-161-055-00 | s | CERAMIC 0.022uF 10% 50V |
| C58 | 1-161-055-00 | s | CERAMIC 0.022uF 10% 50V |
| C59 | 1-161-055-00 | s | CERAMIC 0.022uF 10% 50V |
| C60 | 1-161-055-00 | s | CERAMIC 0.022uF 10% 50V |
| C61 | 1-161-055-00 | s | CERAMIC 0.022uF 10% 50V |

(SY-103 BOARD)

| Ref. No. or Q'ty | Part No. | SP | Description |
|---|---|---|---|
| C62 | 1-161-055-00 | s | CERAMIC 0.022uF 10% 50V |
| C63 | 1-161-055-00 | s | CERAMIC 0.022uF 10% 50V |
| C64 | 1-161-055-00 | s | CERAMIC 0.022uF 10% 50V |
| C65 | 1-161-055-00 | s | CERAMIC 0.022uF 10% 50V |
| C68 | 1-161-055-00 | s | CERAMIC 0.022uF 10% 50V |
| C69 | 1-161-055-00 | s | CERAMIC 0.022uF 10% 50V |
| C70 | 1-161-055-00 | s | CERAMIC 0.022uF 10% 50V |
| C71 | 1-161-055-00 | s | CERAMIC 0.022uF 10% 50V |
| C72 | 1-161-055-00 | s | CERAMIC 0.022uF 10% 50V |
| C73 | 1-161-055-00 | s | CERAMIC 0.022uF 10% 50V |
| C74 | 1-161-055-00 | s | CERAMIC 0.022uF 10% 50V |
| C75 | 1-161-055-00 | s | CERAMIC 0.022uF 10% 50V |
| C76 | 1-161-055-00 | s | CERAMIC 0.022uF 10% 50V |
| C77 | 1-161-055-00 | s | CERAMIC 0.022uF 10% 50V |
| C78 | 1-161-055-00 | s | CERAMIC 0.022uF 10% 50V |
| C79 | 1-161-055-00 | s | CERAMIC 0.022uF 10% 50V |
| C80 | 1-161-055-00 | s | CERAMIC 0.022uF 10% 50V |
| C81 | 1-161-055-00 | s | CERAMIC 0.022uF 10% 50V |
| C82 | 1-161-055-00 | s | CERAMIC 0.022uF 10% 50V |
| C83 | 1-161-055-00 | s | CERAMIC 0.022uF 10% 50V |
| C84 | 1-161-055-00 | s | CERAMIC 0.022uF 10% 50V |
| C85 | 1-161-055-00 | s | CERAMIC 0.022uF 10% 50V |
| C86 | 1-161-055-00 | s | CERAMIC 0.022uF 10% 50V |
| C87 | 1-161-055-00 | s | CERAMIC 0.022uF 10% 50V |
| C88 | 1-161-055-00 | s | CERAMIC 0.022uF 10% 50V |
| C89 | 1-161-055-00 | s | CERAMIC 0.022uF 10% 50V |
| C90 | 1-161-055-00 | s | CERAMIC 0.022uF 10% 50V |
| C91 | 1-161-055-00 | s | CERAMIC 0.022uF 10% 50V |
| C92 | 1-161-055-00 | s | CERAMIC 0.022uF 10% 50V |
| C93 | 1-161-055-00 | s | CERAMIC 0.022uF 10% 50V |
| C94 | 1-161-055-00 | s | CERAMIC 0.022uF 10% 50V |
| C95 | 1-161-055-00 | s | CERAMIC 0.022uF 10% 50V |
| C96 | 1-161-055-00 | s | CERAMIC 0.022uF 10% 50V |
| C97 | 1-161-055-00 | s | CERAMIC 0.022uF 10% 50V |
| C98 | 1-161-055-00 | s | CERAMIC 0.022uF 10% 50V |
| C99 | 1-161-055-00 | s | CERAMIC 0.022uF 10% 50V |
| C100 | 1-161-055-00 | s | CERAMIC 0.022uF 10% 50V |
| C101 | 1-161-055-00 | s | CERAMIC 0.022uF 10% 50V |
| C102 | 1-161-055-00 | s | CERAMIC 0.022uF 10% 50V |
| C103 | 1-161-055-00 | s | CERAMIC 0.022uF 10% 50V |
| C104 | 1-161-055-00 | s | CERAMIC 0.022uF 10% 50V |
| C105 | 1-161-055-00 | s | CERAMIC 0.022uF 10% 50V |
| C106 | 1-161-055-00 | s | CERAMIC 0.022uF 10% 50V |
| C107 | 1-161-055-00 | s | CERAMIC 0.022uF 10% 50V |
| C108 | 1-161-055-00 | s | CERAMIC 0.022uF 10% 50V |
| C109 | 1-161-055-00 | s | CERAMIC 0.022uF 10% 50V |
| C110 | 1-161-055-00 | s | CERAMIC 0.022uF 10% 50V |
| C111 | 1-161-055-00 | s | CERAMIC 0.022uF 10% 50V |
| C112 | 1-161-055-00 | s | CERAMIC 0.022uF 10% 50V |
| C113 | 1-161-055-00 | s | CERAMIC 0.022uF 10% 50V |
| C114 | 1-161-055-00 | s | CERAMIC 0.022uF 10% 50V |
| C115 | 1-161-055-00 | s | CERAMIC 0.022uF 10% 50V |
| C116 | 1-161-055-00 | s | CERAMIC 0.022uF 10% 50V |
| C117 | 1-161-055-00 | s | CERAMIC 0.022uF 10% 50V |
| C118 | 1-161-055-00 | s | CERAMIC 0.022uF 10% 50V |
| C119 | 1-161-055-00 | s | CERAMIC 0.022uF 10% 50V |
| C120 | 1-161-055-00 | s | CERAMIC 0.022uF 10% 50V |
| C121 | 1-161-055-00 | s | CERAMIC 0.022uF 10% 50V |
| C122 | 1-161-055-00 | s | CERAMIC 0.022uF 10% 50V |

(SY-103 BOARD)

| Ref. No. or Q'ty | Part No. | SP | Description |
|---|---|---|---|
| C123 | 1-161-055-00 | s | CERAMIC 0.022uF 10% 50V |
| C124 | 1-161-055-00 | s | CERAMIC 0.022uF 10% 50V |
| C125 | 1-161-055-00 | s | CERAMIC 0.022uF 10% 50V |
| C126 | 1-161-055-00 | s | CERAMIC 0.022uF 10% 50V |
| C127 | 1-161-055-00 | s | CERAMIC 0.022uF 10% 50V |
| C128 | 1-161-055-00 | s | CERAMIC 0.022uF 10% 50V |
| C129 | 1-161-055-00 | s | CERAMIC 0.022uF 10% 50V |
| C130 | 1-161-055-00 | s | CERAMIC 0.022uF 10% 50V |
| C131 | 1-161-055-00 | s | CERAMIC 0.022uF 10% 50V |
| C132 | 1-161-055-00 | s | CERAMIC 0.022uF 10% 50V |
| C133 | 1-161-055-00 | s | CERAMIC 0.022uF 10% 50V |
| C134 | 1-161-055-00 | s | CERAMIC 0.022uF 10% 50V |
| C135 | 1-161-055-00 | s | CERAMIC 0.022uF 10% 50V |
| C136 | 1-161-055-00 | s | CERAMIC 0.022uF 10% 50V |
| C137 | 1-161-055-00 | s | CERAMIC 0.022uF 10% 50V |
| C138 | 1-161-055-00 | s | CERAMIC 0.022uF 10% 50V |
| C139 | 1-161-055-00 | s | CERAMIC 0.022uF 10% 50V |
| C140 | 1-161-055-00 | s | CERAMIC 0.022uF 10% 50V |
| C141 | 1-161-055-00 | s | CERAMIC 0.022uF 10% 50V |
| C142 | 1-161-055-00 | s | CERAMIC 0.022uF 10% 50V |
| C143 | 1-161-055-00 | s | CERAMIC 0.022uF 10% 50V |
| C144 | 1-161-055-00 | s | CERAMIC 0.022uF 10% 50V |
| C145 | 1-161-055-00 | s | CERAMIC 0.022uF 10% 50V |
| C146 | 1-161-055-00 | s | CERAMIC 0.022uF 10% 50V |
| C147 | 1-161-055-00 | s | CERAMIC 0.022uF 10% 50V |
| C148 | 1-161-055-00 | s | CERAMIC 0.022uF 10% 50V |
| C149 | 1-161-055-00 | s | CERAMIC 0.022uF 10% 50V |
| C150 | 1-161-055-00 | s | CERAMIC 0.022uF 10% 50V |
| C151 | 1-161-055-00 | s | CERAMIC 0.022uF 10% 50V |
| C152 | 1-161-055-00 | s | CERAMIC 0.022uF 10% 50V |
| C153 | 1-161-055-00 | s | CERAMIC 0.022uF 10% 50V |
| C154 | 1-161-055-00 | s | CERAMIC 0.022uF 10% 50V |
| C155 | 1-161-055-00 | s | CERAMIC 0.022uF 10% 50V |
| C156 | 1-161-055-00 | s | CERAMIC 0.022uF 10% 50V |
| C157 | 1-161-055-00 | s | CERAMIC 0.022uF 10% 50V |
| C158 | 1-161-055-00 | s | CERAMIC 0.022uF 10% 50V |
| C159 | 1-161-055-00 | s | CERAMIC 0.022uF 10% 50V |
| C160 | 1-161-055-00 | s | CERAMIC 0.022uF 10% 50V |
| C161 | 1-161-055-00 | s | CERAMIC 0.022uF 10% 50V |
| C162 | 1-161-055-00 | s | CERAMIC 0.022uF 10% 50V |
| C163 | 1-161-055-00 | s | CERAMIC 0.022uF 10% 50V |
| C164 | 1-161-055-00 | s | CERAMIC 0.022uF 10% 50V |
| C165 | 1-161-055-00 | s | CERAMIC 0.022uF 10% 50V |
| C166 | 1-161-055-00 | s | CERAMIC 0.022uF 10% 50V |
| C167 | 1-161-055-00 | s | CERAMIC 0.022uF 10% 50V |
| C168 | 1-161-055-00 | s | CERAMIC 0.022uF 10% 50V |
| C169 | 1-161-055-00 | s | CERAMIC 0.022uF 10% 50V |
| C171 | 1-161-055-00 | s | CERAMIC 0.022uF 10% 50V |
| C172 | 1-161-055-00 | s | CERAMIC 0.022uF 10% 50V |
| C173 | 1-161-055-00 | s | CERAMIC 0.022uF 10% 50V |
| C174 | 1-161-055-00 | s | CERAMIC 0.022uF 10% 50V |
| C175 | 1-161-055-00 | s | CERAMIC 0.022uF 10% 50V |
| C176 | 1-161-055-00 | s | CERAMIC 0.022uF 10% 50V |
| C177 | 1-161-055-00 | s | CERAMIC 0.022uF 10% 50V |
| C178 | 1-161-055-00 | s | CERAMIC 0.022uF 10% 50V |
| C179 | 1-161-055-00 | s | CERAMIC 0.022uF 10% 50V |
| C186 | 1-126-157-11 | s | ELECT 10uF 20% 16V |
| C187 | 1-102-110-00 | s | CERAMIC 220PF 10% 50V |
| C187 | 1-107-042-00 | s | MICA 2.2PF 500V |

(SY-103 BOARD)

| Ref. No. or Q'ty | Part No. | SP | Description |
|---|---|---|---|
| C188 | 1-107-026-00 | s | MICA 5.1PF 500V |
| C200 | 1-102-106-00 | s | CERAMIC 100PF 10% 50V |
| C201 | 1-102-106-00 | s | CERAMIC 100PF 10% 50V |
| C202 | 1-102-106-00 | s | CERAMIC 100PF 10% 50V |
| C203 | 1-102-106-00 | s | CERAMIC 100PF 10% 50V |
| CN10 | 1-564-930-11 | o | CONNECTOR, DIL 16P, MALE |
| CN313 | 1-506-747-11 | s | CONNECTOR, DIN 64P, MALE |
| CN314 | 1-506-748-11 | s | CONNECTOR, DIN 96P, MALE |
| D2 | 8-719-911-19 | s | DIODE 1SS119 |
| D3 | 8-719-200-02 | s | DIODE 10E2 |
| D4 | 8-719-911-19 | s | DIODE 1SS119 |
| D5 | 8-719-911-19 | s | DIODE 1SS119 |
| D8 | 8-719-400-35 | s | LED LN35BP, GRN |
| D9 | 8-719-911-19 | s | DIODE 1SS119 |
| IC1 | 8-759-145-65 | s | IC UPD6451C |
| ICA1 | 8-759-916-20 | s | IC SN74HC14N |
| ICA2 | 8-759-901-23 | s | IC SN74LS123N |
| ICA3 | 8-759-916-48 | s | IC SN74HC151N |
| ICA7 | 8-759-916-14 | s | IC SN74HC04N |
| ICA10 | 8-759-916-29 | s | IC SN74HC74N |
| ICA11 | 8-759-916-12 | s | IC SN74HC00N |
| ICA12 | 8-759-916-25 | s | IC SN74HC32N |
| ICA13 | 8-759-917-43 | s | IC SN74HC138N |
| ICB1 | 8-759-916-20 | s | IC SN74HC14N |
| ICB2 | 8-759-916-12 | s | IC SN74HC00N |
| ICB3 | 8-759-202-34 | s | IC TC74HC257P |
| ICB4 | 8-759-202-34 | s | IC TC74HC257P |
| ICB5 | 8-759-941-20 | s | IC SN74120N |
| ICB6 | 8-759-941-20 | s | IC SN74120N |
| ICB7 | 8-759-916-29 | s | IC SN74HC74N |
| ICB8 | 8-759-916-25 | s | IC SN74HC32N |
| ICB9 | 8-759-902-90 | s | IC SN74LS290N |
| ICB10 | 8-759-916-16 | s | IC MC74HC08AN |
| ICB11 | 8-759-233-13 | s | IC SN74HC368AN |
| ICB12 | 8-759-916-14 | s | IC SN74HC04N |
| ICB13 | 8-759-917-43 | s | IC SN74HC138N |
| ICC1 | 8-759-916-16 | s | IC MC74HC08AN |
| ICC2 | 8-759-916-14 | s | IC SN74HC04N |
| ICC3 | 8-759-910-76 | s | IC CX7913A |
| ICC6 | 8-759-909-72 | s | IC CX7912A |
| ICC8 | 8-759-916-29 | s | IC SN74HC74N |
| ICC9 | 8-759-340-46 | s | IC HD14046BP |
| ICC10 | 8-759-909-16 | s | IC CX7907A |
| ICC12 | 8-759-901-89 | s | IC SN74LS189AN |
| ICC13 | 8-759-917-43 | s | IC SN74HC138N |
| ICC14 | 8-759-916-71 | s | IC SN74HC244N |
| ICD1 | 8-759-916-12 | s | IC SN74HC00N |
| ICD2 | 8-759-916-14 | s | IC SN74HC04N |
| ICD3 | 8-759-916-16 | s | IC MC74HC08AN |
| ICD4 | 8-759-202-34 | s | IC TC74HC257P |
| ICD5 | 8-759-901-89 | s | IC SN74LS189AN |
| ICD6 | 8-759-202-34 | s | IC TC74HC257P |
| ICD7 | 8-759-901-89 | s | IC SN74LS189AN |
| ICD8 | 8-759-916-50 | s | IC SN74HC157N |
| ICD9 | 8-759-917-11 | s | IC SN74HC393N |
| ICD10 | 8-759-916-14 | s | IC SN74HC04N |
| ICD11 | 8-759-917-11 | s | IC SN74HC393N |

(SY-103 BOARD)

| Ref. No. or Q'ty | Part No. | SP | Description |
|---|---|---|---|
| ICD12 | 8-759-202-34 | s | IC TC74HC257P |
| ICD14 | 8-759-916-65 | s | IC SN74HC240N |
| ICE1 | 8-759-916-12 | s | IC SN74HC00N |
| ICE3 | 8-759-938-68 | s | IC CXD1095Q |
| ICE5 | 8-759-916-29 | s | IC SN74HC74N |
| ICE6 | 8-759-202-97 | s | IC TC74HC165P |
| ICE7 | 8-759-916-71 | s | IC SN74HC244N |
| ICE8 | 8-759-901-89 | s | IC SN74LS189AN |
| ICE10 | 8-759-240-21 | s | IC TC4021BP |
| ICE11 | 8-759-240-21 | s | IC TC4021BP |
| ICE12 | 8-759-240-21 | s | IC TC4021BP |
| ICE13 | 8-759-240-21 | s | IC TC4021BP |
| ICE14 | 8-759-916-14 | s | IC SN74HC04N |
| ICF1 | 8-759-926-32 | s | IC AM26LS32PC |
| ICF2 | 8-759-926-30 | s | IC AM26LS30PC |
| ICF3 | 8-759-926-30 | s | IC AM26LS30PC |
| ICF4 | 8-759-916-25 | s | IC SN74HC32N |
| ICF5 | 8-759-916-12 | s | IC SN74HC00N |
| ICF6 | 8-759-007-19 | s | IC MC74HC4051N |
| ICF7 | 8-759-916-14 | s | IC SN74HC04N |
| ICF8 | 8-759-916-12 | s | IC SN74HC00N |
| ICF9 | 8-759-916-16 | s | IC MC74HC08AN |
| ICF10 | 8-759-916-14 | s | IC SN74HC04N |
| ICF13 | 8-759-938-68 | s | IC CXD1095Q |
| ICF14 | 8-759-917-11 | s | IC SN74HC393N |
| ICF15 | 8-759-239-75 | s | IC TC74HC4520AP |
| ICG1 | 8-759-926-32 | s | IC AM26LS32PC |
| ICG3 | 8-759-926-30 | s | IC AM26LS30PC |
| ICG4 | 8-759-916-25 | s | IC SN74HC32N |
| ICG5 | 8-759-916-16 | s | IC MC74HC08AN |
| ICG6 | 8-759-007-20 | s | IC MC74HC4052N |
| ICG7 | 8-759-916-14 | s | IC SN74HC04N |
| ICG8 | 8-759-916-16 | s | IC MC74HC08AN |
| ICG9 | 8-759-916-25 | s | IC SN74HC32N |
| ICG10 | 8-759-916-12 | s | IC SN74HC00N |
| ICG11 | 8-759-921-17 | s | IC MC74HC153N |
| ICG12 | 8-759-916-29 | s | IC SN74HC74N |
| ICG13 | 8-759-917-11 | s | IC SN74HC393N |
| ICG14 | 8-759-107-56 | s | IC CXQ71011P |
| ICH1 | 8-759-916-20 | s | IC SN74HC14N |
| ICH2 | 8-759-916-50 | s | IC SN74HC157N |
| ICH3 | 8-759-916-50 | s | IC SN74HC157N |
| ICH4 | 8-759-916-50 | s | IC SN74HC157N |
| ICH5 | 8-759-916-71 | s | IC SN74HC244N |
| ICH6 | 8-759-107-51 | s | IC CXQ71051P |
| ICH7 | 8-759-109-04 | s | IC UPD7201AC |
| ICH8 | 8-752-806-91 | s | IC CXQ71054P |
| ICH10 | 8-752-331-06 | s | IC CXK5864PN-12L |
| ICH11 | 8-759-550-29 | s | IC TMS27C256-Y1H1-2-0 |
| ICH12 | 8-759-550-28 | s | IC TMS27C256-Y0H1-2-0 |
| ICH13 | 8-759-921-50 | s | IC SN74HC573N |
| ICH14 | 8-752-800-46 | s | IC CXQ70108P-8 |
| ICJ1 | 8-759-008-57 | s | IC MC34051P |
| ICJ2 | 8-759-916-25 | s | IC SN74HC32N |
| ICJ3 | 8-752-331-06 | s | IC CXK5864PN-12L |
| ICJ4 | 8-759-921-34 | s | IC SN74HC245N |
| ICJ5 | 8-759-105-76 | s | IC UPD71059C |

(SY-103 BOARD)

| Ref. No. or Q'ty | Part No. | SP | Description |
|---|---|---|---|
| ICJ8 | 8-759-916-18 | s | IC SN74HC10N |
| ICJ9 | 8-759-916-29 | s | IC SN74HC74N |
| ICJ10 | 8-759-917-43 | s | IC SN74HC138N |
| ICJ11 | 8-759-916-20 | s | IC SN74HC14N |
| ICJ12 | 8-759-916-16 | s | IC MC74HC08AN |
| ICJ13 | 8-759-921-34 | s | IC SN74HC245N |
| ICK1 | 8-759-921-34 | s | IC SN74HC245N |
| ICK2 | 8-759-921-34 | s | IC SN74HC245N |
| ICK6 | 8-759-032-84 | s | IC MC74HC132AN |
| ICK9 | 8-759-916-12 | s | IC SN74HC00N |
| ICK10 | 8-759-917-43 | s | IC SN74HC138N |
| ICK11 | 8-759-916-29 | s | IC SN74HC74N |
| ICK12 | 8-759-916-25 | s | IC SN74HC32N |
| ICK13 | 8-759-916-92 | s | IC SN74HC367AN |
| L1 | 1-421-370-00 | s | COIL, CHOKE |
| L2 | 1-421-370-00 | s | COIL, CHOKE |
| L5 | 1-410-509-11 | s | INDUCTOR 10uH |
| Q1 | 8-729-900-36 | s | TRANSISTOR DTC124ES |
| R1 | 1-249-413-11 | s | CARBON 470 5% 1/4W |
| R2 | 1-249-437-11 | s | CARBON 47K 5% 1/4W |
| R3 | 1-249-416-11 | s | CARBON 820 5% 1/4W |
| R4 | 1-249-397-11 | s | CARBON 22 5% 1/4W |
| R5 | 1-249-411-11 | s | CARBON 330 5% 1/4W |
| R6 | 1-249-405-11 | s | CARBON 100 5% 1/4W |
| R7 | 1-249-437-11 | s | CARBON 47K 5% 1/4W |
| R8 | 1-249-437-11 | s | CARBON 47K 5% 1/4W |
| R9 | 1-249-429-11 | s | CARBON 10K 5% 1/4W |
| R10 | 1-249-437-11 | s | CARBON 47K 5% 1/4W |
| R11 | 1-249-437-11 | s | CARBON 47K 5% 1/4W |
| R12 | 1-249-429-11 | s | CARBON 10K 5% 1/4W |
| R14 | 1-249-415-11 | s | CARBON 680 5% 1/4W |
| R15 | 1-249-417-11 | s | CARBON 1K 5% 1/4W |
| R16 | 1-249-416-11 | s | CARBON 820 5% 1/4W |
| R17 | 1-249-431-11 | s | CARBON 15K 5% 1/4W |
| R18 | 1-249-432-11 | s | CARBON 18K 5% 1/4W |
| R19 | 1-249-429-11 | s | CARBON 10K 5% 1/4W |
| R20 | 1-249-429-11 | s | CARBON 10K 5% 1/4W |
| R21 | 1-249-429-11 | s | CARBON 10K 5% 1/4W |
| R22 | 1-249-429-11 | s | CARBON 10K 5% 1/4W |
| R23 | 1-249-429-11 | s | CARBON 10K 5% 1/4W |
| R24 | 1-249-429-11 | s | CARBON 10K 5% 1/4W |
| R25 | 1-249-437-11 | s | CARBON 47K 5% 1/4W |
| R26 | 1-249-429-11 | s | CARBON 10K 5% 1/4W |
| R27 | 1-215-476-00 | s | METAL 200K 1% 1/6W |
| R30 | 1-249-429-11 | s | CARBON 10K 5% 1/4W |
| R31 | 1-249-433-11 | s | CARBON 22K 5% 1/4W |
| R32 | 1-247-895-00 | s | CARBON 470K 5% 1/4W |
| R33 | 1-249-429-11 | s | CARBON 10K 5% 1/4W |
| R35 | 1-249-429-11 | s | CARBON 10K 5% 1/4W |
| R36 | 1-249-429-11 | s | CARBON 10K 5% 1/4W |
| R37 | 1-249-429-11 | s | CARBON 10K 5% 1/4W |
| R38 | 1-249-429-11 | s | CARBON 10K 5% 1/4W |
| R39 | 1-249-433-11 | s | CARBON 22K 5% 1/4W |
| R40 | 1-249-435-11 | s | CARBON 33K 5% 1/4W |
| R41 | 1-249-429-11 | s | CARBON 10K 5% 1/4W |
| R42 | 1-249-437-11 | s | CARBON 47K 5% 1/4W |
| R43 | 1-249-437-11 | s | CARBON 47K 5% 1/4W |

(SY-103 BOARD)

| Ref. No. or Q'ty | Part No. | SP | Description |
|---|---|---|---|
| R44 | 1-249-429-11 | s | CARBON 10K 5% 1/4W |
| R45 | 1-247-743-11 | s | CARBON 220 5% 1/2W |
| R46 | 1-247-745-11 | s | CARBON 330 5% 1/2W |
| R47 | 1-249-429-11 | s | CARBON 10K 5% 1/4W |
| R48 | 1-249-429-11 | s | CARBON 10K 5% 1/4W |
| R49 | 1-249-429-11 | s | CARBON 10K 5% 1/4W |
| R50 | 1-249-429-11 | s | CARBON 10K 5% 1/4W |
| R51 | 1-249-429-11 | s | CARBON 10K 5% 1/4W |
| R52 | 1-249-429-11 | s | CARBON 10K 5% 1/4W |
| R53 | 1-249-405-11 | s | CARBON 100 5% 1/4W |
| R54 | 1-249-429-11 | s | CARBON 10K 5% 1/4W |
| R58 | 1-249-429-11 | s | CARBON 10K 5% 1/4W |
| R59 | 1-249-405-11 | s | CARBON 100 5% 1/4W |
| R60 | 1-249-405-11 | s | CARBON 100 5% 1/4W |
| R61 | 1-249-405-11 | s | CARBON 100 5% 1/4W |
| R62 | 1-249-405-11 | s | CARBON 100 5% 1/4W |
| R63 | 1-249-437-11 | s | CARBON 47K 5% 1/4W |
| R100 | 1-249-429-11 | s | CARBON 10K 5% 1/4W |
| R101 | 1-249-429-11 | s | CARBON 10K 5% 1/4W |
| RB1 | 1-231-410-00 | s | RESISTOR BLOCK 10Kx8 |
| RB2 | 1-231-410-00 | s | RESISTOR BLOCK 10Kx8 |
| RB3 | 1-235-359-11 | s | RESISTOR BLOCK 47Kx4 |
| RB4 | 1-235-005-00 | s | RESISTOR BLOCK 47Kx8 |
| RB5 | 1-235-005-00 | s | RESISTOR BLOCK 47Kx8 |
| RB6 | 1-235-005-00 | s | RESISTOR BLOCK 47Kx8 |
| RB7 | 1-231-533-00 | s | RESISTOR BLOCK 10Kx4 |
| RB8 | 1-231-410-00 | s | RESISTOR BLOCK 10Kx8 |
| RB9 | 1-231-533-00 | s | RESISTOR BLOCK 10Kx4 |
| RB10 | 1-231-410-00 | s | RESISTOR BLOCK 10Kx8 |
| RB11 | 1-231-533-00 | s | RESISTOR BLOCK 10Kx4 |
| RB12 | 1-231-410-00 | s | RESISTOR BLOCK 10Kx8 |
| RB13 | 1-231-533-00 | s | RESISTOR BLOCK 10Kx4 |
| RB14 | 1-231-533-00 | s | RESISTOR BLOCK 10Kx4 |
| RB15 | 1-231-410-00 | s | RESISTOR BLOCK 10Kx8 |
| RB16 | 1-231-533-00 | s | RESISTOR BLOCK 10Kx4 |
| RB17 | 1-231-533-00 | s | RESISTOR BLOCK 10Kx4 |
| RB18 | 1-231-410-00 | s | RESISTOR BLOCK 10Kx8 |
| RB19 | 1-231-410-00 | s | RESISTOR BLOCK 10Kx8 |
| RB20 | 1-231-410-00 | s | RESISTOR BLOCK 10Kx8 |
| RB21 | 1-231-533-00 | s | RESISTOR BLOCK 10Kx4 |
| RB22 | 1-231-533-00 | s | RESISTOR BLOCK 10Kx4 |
| S1 | 1-516-925-21 | s | SWITCH, DIP 8-CKT |
| S2 | 1-552-539-00 | s | SWITCH, TACTILE |
| X1 | 1-567-798-12 | s | CRYSTAL 14.7456MHz |
| X2 | 1-567-795-11 | s | OSCILLATOR, CRYSTAL 14.500MHz |
| X3 | 1-567-794-11 | s | OSCILLATOR, CRYSTAL 14.31818MHz |

## UDR-1 BOARD

| Ref. No. or Q'ty | Part No. | SP | Description |
|---|---|---|---|
| 1pc | 1-506-651-11 | s | CONTACT |
| 1pc | 1-568-206-11 | o | RECEPTACLE PC BOARD |
| C1 | 1-163-038-00 | s | CERAMIC, CHIP 0.1uF 25V |
| C2 | 1-163-038-00 | s | CERAMIC, CHIP 0.1uF 25V |
| C3 | 1-163-141-00 | s | CERAMIC, CHIP 0.001uF 5% 50V |
| C4 | 1-163-038-00 | s | CERAMIC, CHIP 0.1uF 25V |
| C5 | 1-163-141-00 | s | CERAMIC, CHIP 0.001uF 5% 50V |
| C6 | 1-163-038-00 | s | CERAMIC, CHIP 0.1uF 25V |
| C7 | 1-163-038-00 | s | CERAMIC, CHIP 0.1uF 25V |
| C8 | 1-163-038-00 | s | CERAMIC, CHIP 0.1uF 25V |
| C11 | 1-163-141-00 | s | CERAMIC, CHIP 0.001uF 5% 50V |
| C12 | 1-163-038-00 | s | CERAMIC, CHIP 0.1uF 25V |
| C13 | 1-163-038-00 | s | CERAMIC, CHIP 0.1uF 25V |
| C21 | 1-163-141-00 | s | CERAMIC, CHIP 0.001uF 5% 50V |
| C22 | 1-163-038-00 | s | CERAMIC, CHIP 0.1uF 25V |
| C23 | 1-163-038-00 | s | CERAMIC, CHIP 0.1uF 25V |
| C31 | 1-163-141-00 | s | CERAMIC, CHIP 0.001uF 5% 50V |
| C32 | 1-163-038-00 | s | CERAMIC, CHIP 0.1uF 25V |
| C33 | 1-163-038-00 | s | CERAMIC, CHIP 0.1uF 25V |
| C41 | 1-163-141-00 | s | CERAMIC, CHIP 0.001uF 5% 50V |
| C42 | 1-163-038-00 | s | CERAMIC, CHIP 0.1uF 25V |
| C43 | 1-163-038-00 | s | CERAMIC, CHIP 0.1uF 25V |
| C51 | 1-163-141-00 | s | CERAMIC, CHIP 0.001uF 5% 50V |
| C52 | 1-163-038-00 | s | CERAMIC, CHIP 0.1uF 25V |
| C53 | 1-163-038-00 | s | CERAMIC, CHIP 0.1uF 25V |
| C61 | 1-163-141-00 | s | CERAMIC, CHIP 0.001uF 5% 50V |
| C62 | 1-163-038-00 | s | CERAMIC, CHIP 0.1uF 25V |
| C63 | 1-163-038-00 | s | CERAMIC, CHIP 0.1uF 25V |
| C71 | 1-163-141-00 | s | CERAMIC, CHIP 0.001uF 5% 50V |
| C72 | 1-163-038-00 | s | CERAMIC, CHIP 0.1uF 25V |
| C73 | 1-163-038-00 | s | CERAMIC, CHIP 0.1uF 25V |
| C81 | 1-163-141-00 | s | CERAMIC, CHIP 0.001uF 5% 50V |
| C82 | 1-163-038-00 | s | CERAMIC, CHIP 0.1uF 25V |
| C83 | 1-163-038-00 | s | CERAMIC, CHIP 0.1uF 25V |
| D1 | 8-719-105-91 | s | DIODE RD5.6M-B2 |
| D2 | 8-719-105-91 | s | DIODE RD5.6M-B2 |
| FB11 | 1-543-256-11 | s | BEAD, FERRITE |
| FB21 | 1-543-256-11 | s | BEAD, FERRITE |
| FB31 | 1-543-256-11 | s | BEAD, FERRITE |
| FB41 | 1-543-256-11 | s | BEAD, FERRITE |
| FB51 | 1-543-256-11 | s | BEAD, FERRITE |
| FB61 | 1-543-256-11 | s | BEAD, FERRITE |
| FB71 | 1-543-256-11 | s | BEAD, FERRITE |
| FB81 | 1-543-256-11 | s | BEAD, FERRITE |
| Q1 | 8-729-901-00 | s | TRANSISTOR DTC124EK |
| Q2 | 8-729-901-00 | s | TRANSISTOR DTC124EK |
| Q11 | 8-729-119-30 | s | TRANSISTOR 2SA1424 |
| Q12 | 8-729-119-30 | s | TRANSISTOR 2SA1424 |
| Q21 | 8-729-119-30 | s | TRANSISTOR 2SA1424 |
| Q22 | 8-729-119-30 | s | TRANSISTOR 2SA1424 |
| Q31 | 8-729-119-30 | s | TRANSISTOR 2SA1424 |
| Q32 | 8-729-119-30 | s | TRANSISTOR 2SA1424 |
| Q41 | 8-729-119-30 | s | TRANSISTOR 2SA1424 |
| Q42 | 8-729-119-30 | s | TRANSISTOR 2SA1424 |
| Q51 | 8-729-119-30 | s | TRANSISTOR 2SA1424 |
| Q52 | 8-729-119-30 | s | TRANSISTOR 2SA1424 |
| Q61 | 8-729-119-30 | s | TRANSISTOR 2SA1424 |

(UDR-1 BOARD)

| Ref. No. or Q'ty | Part No. | SP | Description |
|---|---|---|---|
| Q62 | 8-729-119-30 | s | TRANSISTOR 2SA1424 |
| Q71 | 8-729-119-30 | s | TRANSISTOR 2SA1424 |
| Q72 | 8-729-119-30 | s | TRANSISTOR 2SA1424 |
| Q81 | 8-729-119-30 | s | TRANSISTOR 2SA1424 |
| Q82 | 8-729-119-30 | s | TRANSISTOR 2SA1424 |
| R1 | 1-216-644-11 | s | METAL, CHIP 510 0.5% 1/10W |
| R2 | 1-216-644-11 | s | METAL, CHIP 510 0.5% 1/10W |
| R11 | 1-216-671-11 | s | METAL, CHIP 6.8K 0.5% 1/10W |
| R12 | 1-216-641-11 | s | METAL, CHIP 390 0.5% 1/10W |
| R13 | 1-216-641-11 | s | METAL, CHIP 390 0.5% 1/10W |
| R14 | 1-216-671-11 | s | METAL, CHIP 6.8K 0.5% 1/10W |
| R15 | 1-216-619-11 | s | METAL, CHIP 47 0.5% 1/10W |
| R16 | 1-216-619-11 | s | METAL, CHIP 47 0.5% 1/10W |
| R17 | 1-216-631-11 | s | METAL, CHIP 150 0.5% 1/10W |
| R18 | 1-216-631-11 | s | METAL, CHIP 150 0.5% 1/10W |
| R19 | 1-216-612-11 | s | METAL, CHIP 24 0.5% 1/10W |
| R21 | 1-216-671-11 | s | METAL, CHIP 6.8K 0.5% 1/10W |
| R22 | 1-216-641-11 | s | METAL, CHIP 390 0.5% 1/10W |
| R23 | 1-216-641-11 | s | METAL, CHIP 390 0.5% 1/10W |
| R24 | 1-216-671-11 | s | MATAL, CHIP 6.8K 0.5% 1/10W |
| R25 | 1-216-619-11 | s | METAL, CHIP 47 0.5% 1/10W |
| R26 | 1-216-619-11 | s | METAL, CHIP 47 0.5% 1/10W |
| R27 | 1-216-631-11 | s | METAL, CHIP 150 0.5% 1/10W |
| R28 | 1-216-631-11 | s | METAL, CHIP 150 0.5% 1/10W |
| R29 | 1-216-612-11 | s | METAL, CHIP 24 0.5% 1/10W |
| R31 | 1-216-671-11 | s | METAL, CHIP 6.8K 0.5% 1/10W |
| R32 | 1-216-641-11 | s | METAL, CHIP 390 0.5% 1/10W |
| R33 | 1-216-641-11 | s | METAL, CHIP 390 0.5% 1/10W |
| R34 | 1-216-671-11 | s | METAL, CHIP 6.8K 0.5% 1/10W |
| R35 | 1-216-619-11 | s | METAL, CHIP 47 0.5% 1/10W |
| R36 | 1-216-619-11 | s | METAL, CHIP 47 0.5% 1/10W |
| R37 | 1-216-631-11 | s | METAL, CHIP 150 0.5% 1/10W |
| R38 | 1-216-631-11 | s | METAL, CHIP 150 0.5% 1/10W |
| R39 | 1-216-612-11 | s | METAL, CHIP 24 0.5% 1/10W |
| R41 | 1-216-671-11 | s | METAL, CHIP 6.8K 0.5% 1/10W |
| R42 | 1-216-641-11 | s | METAL, CHIP 390 0.5% 1/10W |
| R43 | 1-216-641-11 | s | METAL, CHIP 390 0.5% 1/10W |
| R44 | 1-216-671-11 | s | METAL, CHIP 6.8K 0.5% 1/10W |
| R45 | 1-216-619-11 | s | METAL, CHIP 47 0.5% 1/10W |
| R46 | 1-216-619-11 | s | METAL, CHIP 47 0.5% 1/10W |
| R47 | 1-216-631-11 | s | METAL, CHIP 150 0.5% 1/10W |
| R48 | 1-216-631-11 | s | METAL, CHIP 150 0.5% 1/10W |
| R49 | 1-216-612-11 | s | METAL, CHIP 24 0.5% 1/10W |
| R51 | 1-216-671-11 | s | METAL, CHIP 6.8K 0.5% 1/10W |
| R52 | 1-216-641-11 | s | METAL, CHIP 390 0.5% 1/10W |
| R53 | 1-216-641-11 | s | METAL, CHIP 390 0.5% 1/10W |
| R54 | 1-216-671-11 | s | METAL, CHIP 6.8K 0.5% 1/10W |
| R55 | 1-216-619-11 | s | METAL, CHIP 47 0.5% 1/10W |
| R56 | 1-216-619-11 | s | METAL, CHIP 47 0.5% 1/10W |
| R57 | 1-216-631-11 | s | METAL, CHIP 150 0.5% 1/10W |
| R58 | 1-216-631-11 | s | METAL, CHIP 150 0.5% 1/10W |
| R59 | 1-216-612-11 | s | METAL, CHIP 24 0.5% 1/10W |
| R61 | 1-216-671-11 | s | METAL, CHIP 6.8K 0.5% 1/10W |
| R62 | 1-216-641-11 | s | METAL, CHIP 390 0.5% 1/10W |
| R63 | 1-216-641-11 | s | METAL, CHIP 390 0.5% 1/10W |
| R64 | 1-216-671-11 | s | METAL, CHIP 6.8K 0.5% 1/10W |
| R65 | 1-216-619-11 | s | METAL, CHIP 47 0.5% 1/10W |
| R66 | 1-216-619-11 | s | METAL, CHIP 47 0.5% 1/10W |
| R67 | 1-216-631-11 | s | METAL, CHIP 150 0.5% 1/10W |

(UDR-1 BOARD)

| Ref. No. or Q'ty | Part No. | SP | Description |
|---|---|---|---|
| R68 | 1-216-631-11 | s | METAL, CHIP 150 0.5% 1/10W |
| R69 | 1-216-612-11 | s | METAL, CHIP 24 0.5% 1/10W |
| R71 | 1-216-671-11 | s | METAL, CHIP 6.8K 0.5% 1/10W |
| R72 | 1-216-641-11 | s | METAL, CHIP 390 0.5% 1/10W |
| R73 | 1-216-641-11 | s | METAL, CHIP 390 0.5% 1/10W |
| R74 | 1-216-671-11 | s | METAL, CHIP 6.8K 0.5% 1/10W |
| R75 | 1-216-619-11 | s | METAL, CHIP 47 0.5% 1/10W |
| R76 | 1-216-619-11 | s | METAL, CHIP 47 0.5% 1/10W |
| R77 | 1-216-631-11 | s | METAL, CHIP 150 0.5% 1/10W |
| R78 | 1-216-631-11 | s | MTEAL, CHIP 150 0.5% 1/10W |
| R79 | 1-216-612-11 | s | METAL, CHIP 24 0.5% 1/10W |
| R81 | 1-216-671-11 | s | METAL, CHIP 6.8K 0.5% 1/10W |
| R82 | 1-216-641-11 | s | METAL, CHIP 390 0.5% 1/10W |
| R83 | 1-216-641-11 | s | METAL, CHIP 390 0.5% 1/10W |
| R84 | 1-216-671-11 | s | METAL, CHIP 6.8K 0.5% 1/10W |
| R85 | 1-216-619-11 | s | METAL, CHIP 47 0.5% 1/10W |
| R86 | 1-216-619-11 | s | METAL, CHIP 47 0.5% 1/10W |
| R87 | 1-216-631-11 | s | METAL, CHIP 150 0.5% 1/10W |
| R88 | 1-216-631-11 | s | METAL, CHIP 150 0.5% 1/10W |
| R89 | 1-216-612-11 | s | METAL, CHIP 24 0.5% 1/10W |
| RV11 | 1-230-868-11 | s | RES, ADJ, METAL 2.2K |
| RV21 | 1-230-868-11 | s | RES, ADJ, METAL 2.2K |
| RV31 | 1-230-868-11 | s | RES, ADJ, METAL 2.2K |
| RV41 | 1-230-868-11 | s | RES, ADJ, METAL 2.2K |
| RV51 | 1-230-868-11 | s | RES, ADJ, METAL 2.2K |
| RV61 | 1-230-868-11 | s | RES, ADJ, METAL 2.2K |
| RV71 | 1-230-868-11 | s | RES, ADJ, METAL 2.2K |
| RV81 | 1-230-868-11 | s | RES, ADJ, METAL 2.2K |

## UDR-2 BOARD

| Ref. No. or Q'ty | Part No. | SP | Description |
|---|---|---|---|
| C1 | 1-163-038-00 | s | CERAMIC, CHIP 0.1uF 25V |
| C2 | 1-163-038-00 | s | CERAMIC, CHIP 0.1uF 25V |
| C3 | 1-163-038-00 | s | CERAMIC, CHIP 0.1uF 25V |
| C4 | 1-163-038-00 | s | CERAMIC, CHIP 0.1uF 25V |
| C5 | 1-163-038-00 | s | CERAMIC, CHIP 0.1uF 25V |
| C6 | 1-163-038-00 | s | CERAMIC, CHIP 0.1uF 25V |
| C7 | 1-163-038-00 | s | CERAMIC, CHIP 0.1uF 25V |
| C8 | 1-163-038-00 | s | CERAMIC, CHIP 0.1uF 25V |
| C101 | 1-163-141-00 | s | CERAMIC, CHIP 0.001uF 5% 50V |
| C102 | 1-163-038-00 | s | CERAMIC, CHIP 0.1uF 25V |
| C103 | 1-163-038-00 | s | CERAMIC, CHIP 0.1uF 25V |
| C201 | 1-163-141-00 | s | CERAMIC, CHIP 0.001uF 5% 50V |
| C202 | 1-163-038-00 | s | CERAMIC, CHIP 0.1uF 25V |
| C203 | 1-163-038-00 | s | CERAMIC, CHIP 0.1uF 25V |
| C301 | 1-163-141-00 | s | CERAMIC, CHIP 0.001uF 5% 50V |
| C302 | 1-163-038-00 | s | CERAMIC, CHIP 0.1uF 25V |
| C303 | 1-163-038-00 | s | CERAMIC, CHIP 0.1uF 25V |
| C401 | 1-163-141-00 | s | CERAMIC, CHIP 0.001uF 5% 50V |
| C402 | 1-163-038-00 | s | CERAMIC, CHIP 0.1uF 25V |
| C403 | 1-163-038-00 | s | CERAMIC, CHIP 0.1uF 25V |
| C501 | 1-163-141-00 | s | CERAMIC, CHIP 0.001uF 5% 50V |
| C502 | 1-163-038-00 | s | CERAMIC, CHIP 0.1uF 25V |
| C503 | 1-163-038-00 | s | CERAMIC, CHIP 0.1uF 25V |
| C601 | 1-163-141-00 | s | CERAMIC, CHIP 0.001uF 5% 50V |
| C602 | 1-163-038-00 | s | CERAMIC, CHIP 0.1uF 25V |
| C603 | 1-163-038-00 | s | CERAMIC, CHIP 0.1uF 25V |
| C701 | 1-163-141-00 | s | CERAMIC, CHIP 0.001uF 5% 50V |
| C702 | 1-163-038-00 | s | CERAMIC, CHIP 0.1uF 25V |
| C703 | 1-163-038-00 | s | CERAMIC, CHIP 0.1uF 25V |
| C801 | 1-163-141-00 | s | CERAMIC, CHIP 0.001uF 5% 50V |
| C802 | 1-163-038-00 | s | CERAMIC, CHIP 0.1uF 25V |
| C803 | 1-163-038-00 | s | CERAMIC, CHIP 0.1uF 25V |
| D1 | 8-719-106-17 | s | DIODE RD6.8M-B2 |
| D2 | 8-719-106-17 | s | DIODE RD6.8M-B2 |
| FB101 | 1-543-256-11 | s | BEAD, FERRITE |
| FB201 | 1-543-256-11 | s | BEAD, FERRITE |
| FB301 | 1-543-256-11 | s | BEAD, FERRITE |
| FB401 | 1-543-256-11 | s | BEAD, FERRITE |
| FB501 | 1-543-256-11 | s | BEAD, FERRITE |
| FB601 | 1-543-256-11 | s | BEAD, FERRITE |
| FB701 | 1-543-256-11 | s | BEAD, FERRITE |
| FB801 | 1-543-256-11 | s | BEAD, FERRITE |
| Q1 | 8-729-105-68 | s | TRANSISTOR 2SC3356-K |
| Q2 | 8-729-105-68 | s | TRANSISTOR 2SC3356-K |
| Q101 | 8-729-105-59 | s | TRANSISTOR 2SC3357-FE |
| Q102 | 8-729-105-59 | s | TRANSISTOR 2SC3357-FE |
| Q103 | 8-729-105-59 | s | TRANSISTOR 2SC3357-FE |
| Q104 | 8-729-105-59 | s | TRANSISTOR 2SC3357-FE |
| Q201 | 8-729-105-59 | s | TRANSISTOR 2SC3357-FE |
| Q202 | 8-729-105-59 | s | TRANSISTOR 2SC3357-FE |
| Q203 | 8-729-105-59 | s | TRANSISTOR 2SC3357-FE |
| Q204 | 8-729-105-59 | s | TRANSISTOR 2SC3357-FE |
| Q301 | 8-729-105-59 | s | TRANSISTOR 2SC3357-FE |
| Q302 | 8-729-105-59 | s | TRANSISTOR 2SC3357-FE |
| Q303 | 8-729-105-59 | s | TRANSISTOR 2SC3357-FE |
| Q304 | 8-729-105-59 | s | TRANSISTOR 2SC3357-FE |
| Q401 | 8-729-105-59 | s | TRANSISTOR 2SC3357-FE |
| Q402 | 8-729-105-59 | s | TRANSISTOR 2SC3357-FE |

(UDR-2 BOARD)

| Ref. No. or Q'ty | Part No. | SP | Description |
|---|---|---|---|
| Q403 | 8-729-105-59 | s | TRANSISTOR 2SC3357-FE |
| Q404 | 8-726-105-59 | s | TRANSISTOR 2SC3357-FE |
| Q501 | 8-729-105-59 | s | TRANSISTOR 2SC3357-FE |
| Q502 | 8-729-105-59 | s | TRANSISTOR 2SC3357-FE |
| Q503 | 8-729-105-59 | s | TRANSISTOR 2SC3357-FE |
| Q504 | 8-729-105-59 | s | TRANSISTOR 2SC3357-FE |
| Q601 | 8-729-105-59 | s | TRANSISTOR 2SC3357-FE |
| Q602 | 8-729-105-59 | s | TRANSISTOR 2SC3357-FE |
| Q603 | 8-729-105-59 | s | TRANSISTOR 2SC3357-FE |
| Q604 | 8-729-105-59 | s | TRANSISTOR 2SC3357-FE |
| Q701 | 8-729-105-59 | s | TRANSISTOR 2SC3357-FE |
| Q702 | 8-729-105-59 | s | TRANSISTOR 2SC3357-FE |
| Q703 | 8-729-105-59 | s | TRANSISTOR 2SC3357-FE |
| Q704 | 8-729-105-59 | s | TRANSISTOR 2SC3357-FE |
| Q801 | 8-729-105-59 | s | TRANSISTOR 2SC3357-FE |
| Q802 | 8-729-105-59 | s | TRANSISTOR 2SC3357-FE |
| Q803 | 8-729-105-59 | s | TRANSISTOR 2SC3357-FE |
| Q804 | 8-729-105-59 | s | TRANSISTOR 2SC3357-FE |
| R1 | 1-216-651-11 | s | METAL, CHIP 1K 0.5% 1/10W |
| R2 | 1-216-651-11 | s | METAL, CHIP 1K 0.5% 1/10W |
| R3 | 1-216-651-11 | s | METAL, CHIP 1K 0.5% 1/10W |
| R4 | 1-216-651-11 | s | METAL, CHIP 1K 0.5% 1/10W |
| R101 | 1-216-639-11 | s | METAL, CHIP 330 0.5% 1/10W |
| R102 | 1-216-639-11 | s | METAL, CHIP 330 0.5% 1/10W |
| R103 | 1-216-615-11 | s | METAL, CHIP 33 0.5% 1/10W |
| R104 | 1-216-615-11 | s | METAL, CHIP 33 0.5% 1/10W |
| R105 | 1-216-627-11 | s | METAL, CHIP 100 0.5% 1/10W |
| R106 | 1-216-627-11 | s | METAL, CHIP 100 0.5% 1/10W |
| R107 | 1-216-613-11 | s | METAL, CHIP 27 0.5% 1/10W |
| R108 | 1-216-625-11 | s | METAL, CHIP 82 0.5% 1/10W |
| R109 | 1-216-625-11 | s | METAL, CHIP 82 0.5% 1/10W |
| R110 | 1-216-625-11 | s | METAL, CHIP 82 0.5% 1/10W |
| R111 | 1-216-625-11 | s | METAL, CHIP 82 0.5% 1/10W |
| R201 | 1-216-639-11 | s | METAL, CHIP 330 0.5% 1/10W |
| R202 | 1-216-639-11 | s | METAL, CHIP 330 0.5% 1/10W |
| R203 | 1-216-615-11 | s | METAL, CHIP 33 0.5% 1/10W |
| R204 | 1-216-615-11 | s | METAL, CHIP 33 0.5% 1/10W |
| R205 | 1-216-627-11 | s | METAL, CHIP 100 0.5% 1/10W |
| R206 | 1-216-627-11 | s | METAL, CHIP 100 0.5% 1/10W |
| R207 | 1-216-613-11 | s | METAL, CHIP 27 0.5% 1/10W |
| R208 | 1-216-625-11 | s | METAL, CHIP 82 0.5% 1/10W |
| R209 | 1-216-625-11 | s | METAL, CHIP 82 0.5% 1/10W |
| R210 | 1-216-625-11 | s | METAL, CHIP 82 0.5% 1/10W |
| R211 | 1-216-625-11 | s | METAL, CHIP 82 0.5% 1/10W |
| R301 | 1-216-639-11 | s | METAL, CHIP 330 0.5% 1/10W |
| R302 | 1-216-639-11 | s | METAL, CHIP 330 0.5% 1/10W |
| R303 | 1-216-615-11 | s | METAL, CHIP 33 0.5% 1/10W |
| R304 | 1-216-615-11 | s | METAL, CHIP 33 0.5% 1/10W |
| R305 | 1-216-627-11 | s | METAL, CHIP 100 0.5% 1/10W |
| R306 | 1-216-627-11 | s | METAL, CHIP 100 0.5% 1/10W |
| R307 | 1-216-613-11 | s | METAL, CHIP 27 0.5% 1/10W |
| R308 | 1-216-625-11 | s | METAL, CHIP 82 0.5% 1/10W |
| R309 | 1-216-625-11 | s | METAL, CHIP 82 0.5% 1/10W |
| R310 | 1-216-625-11 | s | METAL, CHIP 82 0.5% 1/10W |
| R311 | 1-216-625-11 | s | METAL, CHIP 82 0.5% 1/10W |
| R401 | 1-216-639-11 | s | METAL, CHIP 330 0.5% 1/10W |
| R402 | 1-216-639-11 | s | METAL, CHIP 330 0.5% 1/10W |
| R403 | 1-216-615-11 | s | METAL, CHIP 33 0.5% 1/10W |
| R404 | 1-216-615-11 | s | METAL, CHIP 33 0.5% 1/10W |

(UDR-2 BOARD)

| Ref. No. or Q'ty | Part No. | SP | Description |
|---|---|---|---|
| R405 | 1-216-627-11 | s | METAL, CHIP 100 0.5% 1/10W |
| R406 | 1-216-627-11 | s | METAL, CHIP 100 0.5% 1/10W |
| R407 | 1-216-613-11 | s | METAL, CHIP 27 0.5% 1/10W |
| R408 | 1-216-625-11 | s | METAL, CHIP 82 0.5% 1/10W |
| R409 | 1-216-625-11 | s | METAL, CHIP 82 0.5% 1/10W |
| R410 | 1-216-625-11 | s | METAL, CHIP 82 0.5% 1/10W |
| R411 | 1-216-625-11 | s | METAL, CHIP 82 0.5% 1/10W |
| R501 | 1-216-639-11 | s | METAL, CHIP 330 0.5% 1/10W |
| R502 | 1-216-639-11 | s | METAL, CHIP 330 0.5% 1/10W |
| R503 | 1-216-615-11 | s | METAL, CHIP 33 0.5% 1/10W |
| R504 | 1-216-615-11 | s | METAL, CHIP 33 0.5% 1/10W |
| R505 | 1-216-627-11 | s | METAL, CHIP 100 0.5% 1/10W |
| R506 | 1-216-627-11 | s | METAL, CHIP 100 0.5% 1/10W |
| R507 | 1-216-613-11 | s | METAL, CHIP 27 0.5% 1/10W |
| R508 | 1-216-625-11 | s | METAL, CHIP 82 0.5% 1/10W |
| R509 | 1-216-625-11 | s | METAL, CHIP 82 0.5% 1/10W |
| R510 | 1-216-625-11 | s | METAL, CHIP 82 0.5% 1/10W |
| R511 | 1-216-625-11 | s | METAL, CHIP 82 0.5% 1/10W |
| R601 | 1-216-639-11 | s | METAL, CHIP 330 0.5% 1/10W |
| R602 | 1-216-639-11 | s | METAL, CHIP 330 0.5% 1/10W |
| R603 | 1-216-615-11 | s | METAL, CHIP 33 0.5% 1/10W |
| R604 | 1-216-615-11 | s | METAL, CHIP 33 0.5% 1/10W |
| R605 | 1-216-627-11 | s | METAL, CHIP 100 0.5% 1/10W |
| R606 | 1-216-627-11 | s | METAL, CHIP 100 0.5% 1/10W |
| R607 | 1-216-613-11 | s | METAL, CHIP 27 0.5% 1/10W |
| R608 | 1-216-625-11 | s | METAL, CHIP 82 0.5% 1/10W |
| R609 | 1-216-625-11 | s | METAL, CHIP 82 0.5% 1/10W |
| R610 | 1-216-625-11 | s | METAL, CHIP 82 0.5% 1/10W |
| R611 | 1-216-625-11 | s | METAL, CHIP 82 0.5% 1/10W |
| R701 | 1-216-639-11 | s | METAL, CHIP 330 0.5% 1/10W |
| R702 | 1-216-639-11 | s | METAL, CHIP 330 0.5% 1/10W |
| R703 | 1-216-615-11 | s | METAL, CHIP 33 0.5% 1/10W |
| R704 | 1-216-615-11 | s | METAL, CHIP 33 0.5% 1/10W |
| R705 | 1-216-627-11 | s | METAL, CHIP 100 0.5% 1/10W |
| R706 | 1-216-627-11 | s | METAL, CHIP 100 0.5% 1/10W |
| R707 | 1-216-613-11 | s | METAL, CHIP 27 0.5% 1/10W |
| R708 | 1-216-625-11 | s | METAL, CHIP 82 0.5% 1/10W |
| R709 | 1-216-625-11 | s | METAL, CHIP 82 0.5% 1/10W |
| R710 | 1-216-625-11 | s | METAL, CHIP 82 0.5% 1/10W |
| R711 | 1-216-625-11 | s | METAL, CHIP 82 0.5% 1/10W |
| R801 | 1-216-639-11 | s | METAL, CHIP 330 0.5% 1/10W |
| R802 | 1-216-639-11 | s | METAL, CHIP 330 0.5% 1/10W |
| R803 | 1-216-615-11 | s | METAL, CHIP 33 0.5% 1/10W |
| R804 | 1-216-615-11 | s | METAL, CHIP 33 0.5% 1/10W |
| R805 | 1-216-627-11 | s | METAL, CHIP 100 0.5% 1/10W |
| R806 | 1-216-627-11 | s | METAL, CHIP 100 0.5% 1/10W |
| R807 | 1-216-613-11 | s | METAL, CHIP 27 0.5% 1/10W |
| R808 | 1-216-625-11 | s | METAL, CHIP 82 0.5% 1/10W |
| R809 | 1-216-625-11 | s | METAL, CHIP 82 0.5% 1/10W |
| R810 | 1-216-625-11 | s | METAL, CHIP 82 0.5% 1/10W |
| R811 | 1-216-625-11 | s | METAL, CHIP 82 0.5% 1/10W |

## VR-74 BOARD

| Ref. No. or Q'ty | Part No. | SP | Description |
|---|---|---|---|
| 1pc | A-6013-097-A | o | MOUNTED CIRCUIT BOARD, VR-74 |
| 4pcs | 7-628-254-10 | s | SCREW +PS 2.6X6 |
| 4pcs | 7-682-947-01 | s | SCREW +PSW 3X6 |
| C1 | 1-126-096-11 | s | ELECT 10uF 20% 35V |
| C2 | 1-161-485-00 | s | CERAMIC 0.1uF 50V |
| C3 | 1-126-096-11 | s | ELECT 10uF 20% 35V |
| C4 | 1-161-485-00 | s | CERAMIC 0.1uF 50V |
| C5 | 1-161-485-00 | s | CERAMIC 0.1uF 50V |
| C6 | 1-161-485-00 | s | CERAMIC 0.1uF 50V |
| C7 | 1-126-630-11 | s | ELECT 82uF 20% 25V |
| C8 | 1-161-485-00 | s | CERAMIC 0.1uF 50V |
| C9 | 1-126-630-11 | s | ELECT 82uF 20% 25V |
| C10 | 1-161-485-00 | s | CERAMIC 0.1uF 50V |
| C11 | 1-161-485-00 | s | CERAMIC 0.1uF 50V |
| C12 | 1-161-485-00 | s | CERAMIC 0.1uF 50V |
| C13 | 1-130-483-00 | s | MYLAR 0.01uF 5% 50V |
| C14 | 1-130-483-00 | s | MYLAR 0.01uF 5% 50V |
| C15 | 1-130-483-00 | s | MYLAR 0.01uF 5% 50V |
| C16 | 1-130-483-00 | s | MYLAR 0.01uF 5% 50V |
| C17 | 1-130-483-00 | s | MYLAR 0.01uF 5% 50V |
| C18 | 1-130-483-00 | s | MYLAR 0.01uF 5% 50V |
| C19 | 1-130-483-00 | s | MYLAR 0.01uF 5% 50V |
| C20 | 1-130-483-00 | s | MYLAR 0.01uF 5% 50V |
| C21 | 1-161-485-00 | s | CERAMIC 0.1uF 50V |
| C22 | 1-161-485-00 | s | CERAMIC 0.1uF 50V |
| C23 | 1-126-096-11 | s | ELECT 10uF 20% 35V |
| C24 | 1-126-096-11 | s | ELECT 10uF 20% 35V |
| C25 | 1-161-485-00 | s | CERAMIC 0.1uF 50V |
| C26 | 1-126-516-11 | s | ELECT 120uF 20% 16V |
| C27 | 1-161-485-00 | s | CERAMIC 0.1uF 50V |
| C28 | 1-131-367-00 | s | TANTALUM 22uF 10% 20V |
| CN801 | 1-563-868-11 | s | CONNECTOR, 44P, FEMALE |
| CN802 | 1-563-868-11 | s | CONNECTOR, 44P, FEMALE |
| D1 | 8-719-981-01 | s | DIODE ERA81-004 |
| IC1 | 8-759-701-45 | s | IC NJM4560S-D |
| IC2 | 8-759-982-21 | s | IC RC78L05A |
| IC3 | 8-759-982-27 | s | IC RC78L15A |
| IC4 | 8-759-982-49 | s | IC RC79L15A |
| IC5 | 8-759-106-58 | s | IC UPD7004C |
| IC6 | 8-759-007-20 | s | IC MC74HC4052N |
| IC7 | 8-759-701-45 | s | IC NJM4560S-D |
| J1 | 1-507-552-00 | s | JACK, PHONE |
| L1 | 1-421-329-00 | s | COIL, CHOKE |
| L2 | 1-421-329-00 | s | COIL, CHOKE |
| Q1 | 8-729-203-49 | s | TRANSISTOR 2SC3327-B |
| Q2 | 8-729-203-49 | s | TRANSISTOR 2SC3327-B |
| Q3 | 8-729-203-49 | s | TRANSISTOR 2SC3327-B |
| Q4 | 8-729-203-49 | s | TRANSISTOR 2SC3327-B |
| Q5 | 8-729-900-61 | s | TRANSISTOR DTA114ES |
| R1 | 1-249-398-11 | s | CARBON 27 5% 1/4W |
| R2 | 1-249-398-11 | s | CARBON 27 5% 1/4W |
| R3 | 1-215-469-00 | s | METAL 100K 1% 1/6W |
| R4 | 1-215-405-00 | s | METAL 220 1% 1/6W |
| R5 | 1-215-405-00 | s | METAL 220 1% 1/6W |
| R6 | 1-215-405-00 | s | METAL 220 1% 1/6W |
| R7 | 1-215-405-00 | s | METAL 220 1% 1/6W |
| R8 | 1-215-405-00 | s | METAL 220 1% 1/6W |
| R9 | 1-215-405-00 | s | METAL 220 1% 1/6W |
| R10 | 1-215-405-00 | s | METAL 220 1% 1/6W |
| R11 | 1-215-405-00 | s | METAL 220 1% 1/6W |
| R12 | 1-215-397-00 | s | METAL 100 1% 1/6W |
| R13 | 1-215-453-00 | s | METAL 22K 1% 1/6W |
| RB1 | 1-231-521-00 | s | RESISTOR BLOCK 3.3Kx4 |
| RV1 | 1-224-919-00 | s | RES, ADJ, METAL FILM 5K |
| RV2 | 1-228-550-00 | s | RES, VAR, CARBON 10K/10K |
| RV3 | 1-230-341-11 | s | RES WITH SW, VAR, CARBON 10K |
| RV4 | 1-230-341-11 | s | RES WITH SW, VAR, CARBON 10K |
| RV5 | 1-230-341-11 | s | RES WITH SW, VAR, CARBON 10K |
| RV6 | 1-230-341-11 | s | RES WITH SW, VAR, CARBON 10K |
| RV7 | 1-230-341-11 | s | RES WITH SW, VAR, CARBON 10K |
| RV8 | 1-230-341-11 | s | RES WITH SW, VAR, CARBON 10K |
| RV9 | 1-230-341-11 | s | RES WITH SW, VAR, CARBON 10K |
| RV10 | 1-230-341-11 | s | RES WITH SW, VAR, CARBON 10K |
| RV11 | 1-230-341-11 | s | RES WITH SW, VAR, CARBON 10K |
| RV12 | 1-230-340-11 | s | RES WITH SW, VAR, CARBON 10K |
| RV13 | 1-228-549-00 | s | RES WITH SW, VAR, CARBON 10K |
| S1 | 1-572-198-11 | s | SWITCH, KEY BOARD |

## FRAME

| Ref. No. or Q'ty | Part No. | SP | Description |
|---|---|---|---|
| 1pc | ⚠1-413-274-11 | o | REGULATOR, SWITCHING UR-20 |
| 1pc | ⚠1-413-281-21 | o | REGULATOR, SWITCHING KRV060 |
| 1pc | ⚠1-413-406-11 | o | REGULATOR, SWITCHING DJ-150AT-75 |
| 1pc | 1-515-618-12 | s | CLUTCH, ELECTROMAGNETIC |
| 1pc | 1-548-601-11 | s | COUNTER, ELECTROMAGNETIC |
| 1pc (for J) | ⚠1-559-001-11 | s | CORD, POWER 2P |
| 1pc (for UC) | ⚠1-558-999-11 | s | CORD, POWER 3P |
| 1pc (for EK) | ⚠1-556-371-00 | s | CORD, POWER 3P |
| CB1 | ⚠1-576-044-11 | s | BRAKER, CIRCUIT 10A 250V |
| CN1F | 1-562-151-11 | o | HOUSING, 6P |
| | 1-563-088-11 | o | CONTACT, FEMALE, AWG24-30 |
| CN3F (TO PROCESSOR) | | | Refer to CN3/DIF-2 board. |
| CN4F (TO PROCESSOR) | | | Refer to CN4/DIF-2 board. |
| CN11F | 1-562-148-11 | o | HOUSING, 3P |
| | 1-563-088-11 | o | CONTACT, FEMALE AWG24-30 |
| CN12F | 1-562-148-11 | o | HOUSING, 3P |
| | 1-563-088-11 | o | CONTACT, FEMALE AWG24-30 |
| CN13F | 1-562-148-11 | o | HOUSING, 3P |
| | 1-563-088-11 | o | CONTACT, FEMALE AWG24-30 |
| CN14F | 1-562-148-11 | o | HOUSING, 3P |
| | 1-563-088-11 | o | CONTACT, FEMALE AWG24-30 |
| CN21F | 1-562-148-11 | o | HOUSING, 3P |
| | 1-563-088-11 | o | CONTACT, FEMALE AWG24-30 |
| CN22F | 1-562-148-11 | o | HOUSING, 3P |
| | 1-563-088-11 | o | CONTACT, FEMALE AWG24-30 |
| CN23F | 1-562-148-11 | o | HOUSING, 3P |
| | 1-563-088-11 | o | CONTACT, FEMALE AWG24-30 |
| CN24F | 1-562-148-11 | o | HOUSING, 3P |
| | 1-563-088-11 | o | CONTACT, FEMALE AWG24-30 |
| CN31F | 1-562-148-11 | o | HOUSING, 3P |
| | 1-563-088-11 | o | CONTACT, FEMALE AWG24-30 |
| CN32F | 1-562-148-11 | o | HOUSING, 3P |
| | 1-563-088-11 | o | CONTACT, FEMALE AWG24-30 |
| CN33F | 1-562-148-11 | o | HOUSING, 3P |
| | 1-563-088-11 | o | CONTACT, FEMALE AWG24-30 |
| CN34F | 1-562-148-11 | o | HOUSING, 3P |
| | 1-563-088-11 | o | CONTACT, FEMALE AWG24-30 |
| CN41F | 1-562-148-11 | o | HOUSING, 3P |
| | 1-563-088-11 | o | CONTACT, FEMALE AWG24-30 |
| CN42F | 1-562-148-11 | o | HOUSING, 3P |
| | 1-563-088-11 | o | CONTACT, FEMALE AWG24-30 |
| CN43F | 1-562-148-11 | o | HOUSING, 3P |
| | 1-563-088-11 | o | CONTACT, FEMALE AWG24-30 |
| CN44F | 1-562-148-11 | o | HOUSING, 3P |
| | 1-563-088-11 | o | CONTACT, FEMALE AWG24-30 |

(FRAME)

| Ref. No. or Q'ty | Part No. | SP | Description |
|---|---|---|---|
| CN51F | 1-562-148-11 | o | HOUSING, 3P |
| | 1-563-088-11 | o | CONTACT, FEMALE AWG24-305 |
| CN52F | 1-562-148-11 | o | HOUSING, 3P |
| | 1-563-088-11 | o | CONTACT, FEMALE AWG24-30 |
| CN53F | 1-562-148-11 | o | HOUSING, 3P |
| | 1-563-088-11 | o | CONTACT, FEMALE AWG24-30 |
| CN91F | 1-562-148-11 | o | HOUSING, 3P |
| | 1-563-088-11 | o | CONTACT, FEMALE AWG24-30 |
| CN92F | 1-562-148-11 | o | HOUSING, 3P |
| | 1-563-088-11 | o | CONTACT, FEMALE AWG24-30 |
| CN001F | 1-509-984-00 | o | HOUSING, IL 3P |
| | 1-560-298-00 | o | CONTACT, FEMALE AWG22-28 |
| CN002F | 1-509-985-00 | o | HOUSING, IL 4P |
| | 1-560-298-00 | o | CONTACT, FEMALE AWG22-28 |
| CN003F | 1-509-986-00 | o | HOUSING, IL 5P |
| | 1-560-298-00 | o | CONTACT, IL, FEMALE AWG22-28 |
| CN004F | 1-509-984-00 | o | HOUSING, IL 3P |
| | 1-560-298-00 | o | CONTACT, FEMALE AWG22-28 |
| CN006F | 1-509-988-00 | o | HOUSING, IL 8P |
| | 1-560-298-00 | o | CONTACT, FEMALE AWG22-28 |
| CN007F | 1-509-985-00 | o | HOUSING, IL 4P |
| | 1-560-298-00 | o | CONTACT, FEMALE AWG22-28 |
| CN008F | 1-509-984-00 | o | HOUSING, IL 3P |
| | 1-560-298-00 | o | CONTACT, FEMALE AWG22-28 |
| CN009F | 1-509-984-00 | o | HOUSING, IL 3P |
| | 1-560-298-00 | o | CONTACT, FEMALE AWG22-28 |
| CN010F | 1-509-983-00 | o | HOUSING, IL 2P |
| | 1-560-298-00 | o | CONTACT, FEMALE AWG22-28 |
| CN011F | 1-509-984-00 | o | HOUSING, IL 3P |
| | 1-560-298-00 | o | CONTACT, FEMALE AWG22-28 |
| CN021F | 1-561-891-00 | o | HOUSING, PS 26P |
| | 1-560-768-00 | o | CONTACT, FEMALE AWG24-28 |
| CN022F | 1-509-987-00 | o | HOUSING, IL 6P |
| | 1-560-298-00 | o | CONTACT, FEMALE AWG22-28 |
| CN101F | (to CD-37 board) | | |
| | 1-561-888-00 | o | HOUSING, PS 10P |
| | 1-560-768-00 | o | CONTACT, FEMALE AWG24-28 |
| CN101F | (to SP-01 board) | | |
| | 1-561-069-00 | o | HOUSING, 2P |
| | ⚠1-561-067-00 | o | CONTACT, FEMALE AWG14-20 |
| CN102F | (to CD-37 board) | | |
| | 1-561-889-00 | o | HOUSING, PS 16P |
| | 1-560-768-00 | o | CONTACT, FEMALE AWG24-28 |
| CN102F | (to SP-01 board) | | |
| | 1-561-069-00 | o | HOUSING, 2P |
| | ⚠1-561-067-00 | o | CONTACT, FEMALE AWG14-20 |
| CN103F | (to CD-37 board) | | |
| | 1-509-984-00 | o | HOUSING, IL 3P |
| | 1-560-298-00 | o | CONTACT, FEMALE AWG22-28 |

(FRAME)

| Ref. No. or Q'ty | Part No. | SP | Description |
|---|---|---|---|
| CN103F (to SP-02 board) | | | |
| | 1-561-069-00 | o | HOUSING, 2P |
| | ⚠1-561-067-00 | o | CONTACT, FEMALE AWG14-20 |
| CN104F (to CD-37 board) | | | |
| | 1-561-890-00 | o | HOUSING, PS 20P |
| | 1-560-768-00 | o | CONTACT, FEMALE AWG24-28 |
| CN104F (to SP-03 board) | | | |
| | 1-561-069-00 | o | HOUSING, 2P |
| | ⚠1-561-067-00 | o | CONTACT, FEMALE AWG14-20 |
| CN105F | 1-509-986-00 | o | HOUSING, IL 5P |
| | 1-560-298-00 | o | CONTACT, FEMALE AWG22-28 |
| CN106F | 1-509-985-00 | o | HOUSING, IL 4P |
| | 1-560-298-00 | o | CONTACT, FEMALE AWG22-28 |
| CN107F (to CD-37 board) | | | |
| | 1-561-828-00 | o | HOUSING, 3P |
| | ⚠1-561-067-00 | o | CONTACT, FEMALE AWG14-20 |
| CN107F (to CAPSTAN MOTOR) | | | |
| | 1-509-985-00 | o | HOUSING, IL 4P |
| | 1-560-298-00 | o | CONTACT, FEMALE AWG22-28 |
| CN108F | 1-563-119-11 | o | HOUSING, PS 10P |
| | 1-563-115-11 | o | CONTACT, FEMALE AWG24-28 |
| CN109F | 1-509-987-00 | o | HOUSING, IL 6P |
| | 1-560-298-00 | o | CONTACT, FEMALE AWG22-28 |
| CN110F | 1-561-828-00 | o | HOUSING, 3P |
| | ⚠1-561-067-00 | o | CONTACT, FEMALE AWG14-20 |
| CN201F (4P connector to SP-01 board) | Refer to CN201F/SP-01 board. | | |
| CN201F (to RM-43 board) | | | |
| | 1-561-071-00 | o | HOUSING, 6P |
| | ⚠1-561-067-00 | o | CONTACT, FEMALE AWG14-20 |
| CN202F (to SP-01 board) | | | |
| | 1-509-988-00 | o | HOUSING, IL 8P |
| | 1-560-298-00 | o | CONTACT, FEMALE AWG22-28 |
| CN202F (to RM-43 board) | | | |
| | 1-561-071-00 | o | HOUSING, 6P |
| | ⚠1-561-067-00 | o | CONTACT, FEMALE AWG14-20 |
| CN203F (to SP-01 board) | | | |
| | 1-509-989-00 | o | HOUSING, IL 10P |
| | 1-560-298-00 | o | CONTACT, FEMALE AWG22-28 |
| CN203F (to RM-43 board) | | | |
| | 1-561-071-00 | o | HOUSING, 6P |
| | ⚠1-561-067-00 | o | CONTACT, FEMALE AWG14-20 |
| CN204F (to SP-02 board) | | | |
| | 1-509-988-00 | o | HOUSING, IL 8P |
| | 1-560-298-00 | o | CONTACT, FEMALE AWG22-28 |
| CN204F (10P connector to RM-43 board) | not replaceable | | |
| CN205F (4P connector to SP-02 board) | Refer to CN205F/SP-02 board. | | |
| CN205F (10P connector to RM-43 board) | not replaceable | | |

(FRAME)

| Ref. No. or Q'ty | Part No. | SP | Description |
|---|---|---|---|
| CN206F (to SP-03 board) | | | |
| | 1-509-984-00 | o | HOUSING, IL 3P |
| | 1-560-298-00 | o | CONTACT, FEMALE AWG22-28 |
| CN206F (to RM-43 board) | | | |
| | 1-509-987-00 | o | HOUSING, IL 6P |
| | 1-560-298-00 | o | CONTACT, FEMALE AWG22-28 |
| CN207F (to SP-03 board) | | | |
| | 1-509-989-00 | o | HOUSING, IL 10P |
| | 1-560-298-00 | o | CONTACT, FEMALE AWG22-28 |
| CN207F (to RM-43 board) | | | |
| | 1-509-987-00 | o | HOUSING, IL 6P |
| | 1-560-298-00 | o | CONTACT, FEMALE AWG22-28 |
| CN208F (4P connector to SP-03 board) | Refer to CN208F/SP-03 board. | | |
| CN261F | 1-509-986-00 | o | HOUSING, IL 3P |
| | 1-560-298-00 | o | CONTACT, FEMALE AWG22-28 |
| CN262F | 1-509-985-00 | o | HOUSING, IL 3P |
| | 1-560-298-00 | o | CONTACT, FEMALE AWG22-28 |
| CN263F | 1-509-984-00 | o | HOUSING, IL 3P |
| | 1-560-298-00 | o | CONTACT, FEMALE AWG22-28 |
| CN264F | 1-509-984-00 | o | HOUSING, IL 3P |
| | 1-560-298-00 | o | CONTACT, FEMALE AWG22-28 |
| CN291F | 1-509-988-00 | o | HOUSING, IL 8P |
| | 1-560-298-00 | o | CONTACT, FEMALE AWG22-28 |
| CN292F | 1-509-985-00 | o | HOUSING, IL 4P |
| | 1-560-298-00 | o | CONTACT, FEMALE AWG22-28 |
| CN325F | 1-561-858-00 | o | HOUSING, MIC 17P |
| | 1-560-761-00 | o | CONTACT, FEMALE AWG18-22 |
| CN326F | 1-509-987-00 | o | HOUSING, IL 6P |
| | 1-560-298-00 | o | CONTACT, FEMALE AWG22-28 |
| CN327F | 1-509-984-00 | o | HOUSING, IL 3P |
| | 1-560-298-00 | o | CONTACT, FEMALE AWG22-28 |
| CN328F | 1-562-812-11 | o | HOUSING, MIC 13P |
| | 1-560-761-00 | o | CONTACT, FEMALE AWG18-22 |
| CN329F (8P connector ) | Refer to CN701M. | | |
| CN330F | 1-563-122-11 | o | HOUSING, PS 16P |
| | 1-563-115-11 | o | CONTACT, FEMALE AWG24-28 |
| CN331F | 1-561-894-00 | o | HOUSING, PS 40P |
| | 1-560-767-00 | o | CONTACT, FEMALE AWG22-24 |
| | 1-560-768-00 | o | CONTACT, FEMALE AWG24-28 |
| CN332F | 1-561-892-00 | o | HOUSING, PS 30P |
| | 1-560-768-00 | o | CONTACT, FEMALE AWG24-28 |
| CN333F | 1-561-893-00 | o | HOUSING, PS 34P |
| | 1-560-768-00 | o | CONTACT, FEMALE AWG24-28 |
| CN334F | 1-563-120-11 | o | HOUSING, PS 12P |
| | 1-563-115-11 | o | CONTACT, FEMALE AWG24-28 |
| CN335F | 1-563-120-11 | o | HOUSING, PS 12P |
| | 1-563-115-11 | o | CONTACT, FEMALE AWG24-28 |

(FARME)

| Ref. No. or Q'ty | Part No. | SP | Description |
|---|---|---|---|
| CN336F | 1-563-120-11 | o | HOUSING, PS 12P |
| | 1-563-115-11 | o | CONTACT, FEMALE AWG24-28 |
| CN337F | 1-563-120-11 | o | HOUSING, PS 12P |
| | 1-563-115-11 | o | CONTACT, FEMALE AWG24-28 |
| CN338F | 1-509-988-00 | o | HOUSING, IL 8P |
| | 1-560-298-00 | o | CONTACT, FEMALE AWG22-28 |
| CN339F | 1-562-810-11 | o | HOUSING, 5P |
| | 1-560-761-11 | o | CONTACT, FEMALE |
| CN340F | 1-509-985-00 | o | HOUSING, IL 8P |
| | 1-560-298-00 | o | CONTACT, FEMALE AWG22-28 |
| CN356F | not replaceable | | |
| CN357F | 1-509-989-00 | o | HOUSING, IL 10P |
| | 1-563-088-11 | o | CONTACT, FEMALE AWF24-30 |
| CN358F | 1-509-984-00 | o | HOUSING, IL 3P |
| | 1-563-088-11 | o | CONTACT, FEMALE AWF24-30 |
| CN401F | 1-509-984-00 | o | HOUSING, IL 3P |
| | 1-560-298-00 | o | CONTACT, FEMALE AWG22-28 |
| CN402F | 1-509-984-00 | o | HOUSING, IL 3P |
| | 1-560-298-00 | o | CONTACT, FEMALE AWG22-28 |
| CN403F | 1-509-984-00 | o | HOUSING, IL 3P |
| | 1-560-298-00 | o | CONTACT, FEMALE AWG22-28 |
| CN601 (CUE LINE IN) | Refer to CN601/LO-06 board. | | |
| CN602 (TC LINE IN) | Refer to CN602/LO-06 board. | | |
| CN603 (CUE LINE OUT) | Refer to CN603/LO-06 board. | | |
| CN604 (TC LINE OUT) | Refer to CN604/LO-06 board. | | |
| CN605 (MONITOR OUT R) | Refer to CN605/LO-06 board. | | |
| CN606 (MONITOR OUT L) | Refer to CN606/LO-06 board. | | |
| CN651F (REMOTE-3) | Refer to CN651/IF-207 board. | | |
| CN652F (REMOTE AUX) | Refer to CN652/IF-207 board. | | |
| CN653M (TO PROCESSOR) | Refer to CN653/IF-207 board. | | |
| CN661F (REMOTE-1) | Refer to CN661/SE-49 board. | | |
| CN662F (REMOTE-2A IN) | Refer to CN662/SE-49 board. | | |
| CN663F (REMOTE-2A OUT) | Refer to CN663/SE-49 board. | | |
| CN664F (REMOTE-2B I/O) | Refer to CN664/SE-49 board. | | |
| CN701M | 1-559-002-12 | s | CABLE ASSY, 8P/8P 2m |
| | 1-559-524-11 | s | CABLE ASSY, 8P/8P 10m (OPTION) |
| CN705F | 1-562-153-11 | o | HOUSING, 8P |
| | 1-563-088-11 | o | CONTACT, FEMALE AWG24-30 |
| CN706F | 1-562-155-11 | o | HOUSING, 10P |
| | 1-563-088-11 | o | CONTACT, FEMALE AWG24-30 |
| CN707F | 1-562-153-11 | o | HOUSING, 8P |
| | 1-563-088-11 | o | CONTACT, FEMALE AWG24-30 |
| CN708F | 1-562-155-11 | o | HOUSING, 10P |
| | 1-563-088-11 | o | CONTACT, FEMALE AWG24-30 |
| CN803F | 1-942-767-11 | o | CABLE, FLAT 20P AU-SW269 |
| CN804F | 1-942-766-11 | o | CABLE, FLAT 10P AU-SW270 |
| CN821F | Refer to CN803F. | | |
| CN831F | Refer to CN804F. | | |

(FRAME)

| Ref. No. or Q'ty | Part No. | SP | Description |
|---|---|---|---|
| CN901F | 1-561-828-00 | o | HOUSING, 3P |
| | ⚠1-561-067-00 | o | CONTACT, FEMALE AWG14-20 |
| CN902F | 1-562-812-11 | o | HOUSING, MIC 13P |
| | 1-560-761-00 | o | CONTACT, FEMALE AWG18-22 |
| CN903F | 1-509-987-00 | o | HOUSING, IL 6P |
| | 1-560-298-00 | o | CONTACT, FEMALE AWG22-28 |
| CN904F | 1-509-985-00 | o | HOUSING, IL 4P |
| | 1-560-298-00 | o | CONTACT, FEMALE AWG22-28 |
| CN905F | 1-562-810-11 | o | HOUSING, MIC 5P |
| | 1-560-761-00 | o | CONTACT, FEMALE AWG18-22 |
| CN906F | 1-509-986-00 | o | HOUSING, IL 5P |
| | 1-560-298-00 | o | CONTACT, FEMALE AWG22-28 |
| CN907F | 1-561-858-11 | o | HOUSING, MIC 17P |
| | 1-560-761-00 | o | CONTACT, FEMALE AWG18-22 |
| CN908F | 1-561-828-00 | o | HOUSING, 3P |
| | ⚠1-561-067-00 | o | CONTACT, FEMALE AWG14-20 |
| CN911F | 1-561-828-11 | o | HOUSING, 3P |
| | ⚠1-561-067-00 | o | CONTACT, FEMALE AWG14-20 |
| CN912F | 1-561-828-00 | o | HOUSING, 3P |
| | ⚠1-561-067-00 | o | CONTACT, FEMALE AWG14-20 |
| CN913F | 1-561-828-00 | o | HOUSING, 3P |
| | ⚠1-561-067-00 | o | CONTACT, FEMALE AWG14-20 |
| CN914F | 1-561-828-00 | o | HOUSING, 3P |
| | ⚠1-561-068-00 | o | CONTACT, FEMALE |
| CN915F | 1-561-828-00 | o | HOUSING, 3P |
| | ⚠1-561-067-00 | o | CONTACT, FEMALE AWG14-20 |
| CN916F | 1-564-070-00 | o | HOUSING, 3P |
| | ⚠1-561-068-00 | o | CONTACT, FEMALE |
| FB1 | 1-543-591-11 | s | CLAMP, SLEEVE FERRITE |
| H19 (Full erase head) | 8-825-501-50 | s | HEAD EF-274-51 |
| H20 (CUE/TC/CTL erase head) | A-6036-090-A | o | HEAD ASSY, EF312-5103 |
| H21 (REC head) | A-6036-089-A | o | HEAD ASSY, RS306-5112 |
| H22 (PB head) | A-6036-087-A | o | HEAD ASSY, PF313-5112 |
| H23 (CONFI head) | A-6036-088-A | o | HEAD ASSY, PF313-5112 |
| M1 (threading motor) | 1-541-198-00 | s | MOTOR, GEARED EN35-H1G9B |
| M3 (S-reel motor) | 8-835-231-01 | s | MOTOR, DC BHF-2202A |
| M4 (T-reel motor) | 8-835-231-01 | s | MOTOR, DC BHF-2202A |
| M5 (capstan motor) | 8-835-232-01 | s | MOTOR, DC BHF-2301A |

## (FRAME)

| Ref. No. or Q'ty | Part No. | SP | Description |
|---|---|---|---|
| M6 (drum motor) | | | not replaceable |
| M7 (fan on rear panel) | 1-541-327-11 | s | MOTOR, FAN DC |
| M8 (fan on rear panel) | 1-541-327-11 | s | MOTOR, FAN DC |
| M9 (fan on power unit) | 1-541-337-21 | s | MOTOR, FAN DC |
| M10 (S-side blower) | 1-541-424-11 | s | BLOWER |
| M11 (T-side blower) | 1-541-424-11 | s | BLOWER |
| PM1 (solenoid for S-reel brake) | 1-454-304-00 | s | SOLENOID |
| PM2 (solenoid for T-reel brake) | 1-454-304-00 | s | SOLENOID |
| PM3 (solenoid for pinch roller) | 1-454-432-11 | s | SOLENOID |
| S1 (POWER switch) | ⚠1-570-936-11 | s | SWITCH, ROCKER |
| S2 (Voltage selector) | ⚠1-570-742-11 | s | SWITCH, ROCKER |
| TS1 (Thermal switch) | | | Refer to SP-03 board. |
| TS2 (Thermal switch) | | | Refer to SP-03 board. |
| TS201 (Thermal switch) | | | Refer to SP-02 board. |
| TS202 (Thermal switch) | | | Refer to SP-02 board. |
| TS301 (Thermal switch) | | | Refer to SP-01 board. |
| TS302 (Thermal switch) | | | Refer to SP-01 board. |

## PACKING MATERIALS & SUPPLIED ACCESSORIES

| Ref. No. or Q'ty | Part No. | SP | Description |
|---|---|---|---|
| 1pc | A-6001-007-A | s | EX-136 ASSY<br>(Refer to "EX-136 board" for the components.) |
| 1pc | 1-506-421-00 | s | ADAPTOR, PLUG |
| 1pc | 1-563-379-11 | s | SHELL, D-SUB 50P |
| 1pc | 1-565-516-11 | s | CONNECTOR, D-SUB 50P, MALE |
| 1pc | 3-714-815-01 | o | SHEET, MAINTENANCE |
| 2pcs | 3-714-847-11 | o | LABEL, KEY ID |
| 2pcs | 3-731-437-01 | o | SHEET, SUB TEN KEY |
| 5pcs | 3-178-770-01 | s | CLOTH, CLEANING |
| 4pcs | 7-623-212-22 | s | SW 5, TYPE 2 |
| 4pcs | 7-682-578-04 | s | SCREW +B 5X16 |
| 4pcs | 7-688-005-01 | s | W 5, SMALL |

## OPTIONAL FIXTURE

| Part No. | SP | Description |
|---|---|---|
| J-6040-160-A | | FLAT PLATE |
| J-6040-460-A | | TAPERED SCREW |
| J-6041-640-A | | TENSION SCALE, 5kg |
| J-6041-670-A | | THICKNESS GAUGE |
| J-6041-700-B | | L-SHAPED HEX. WRENCH SET |
| J-6041-770-A | | TEST CLIP, IC TC-16 |
| J-6041-780-A | | TEST CLIP, IC TC-20 |
| J-6043-720-A | | BRAKE ADJUSTMENT TOOL |
| J-6250-800-A | | DRUM ECCENTRICITY ADJ. GAUGE |
| J-6251-960-A | | TENSION ADJUSTMENT TOOL |
| J-6252-210-A | | HEAD TIP MICROSCOPE |
| J-6252-330-A | | BVH-3000 TOOL KIT |
| J-6252-510-A | | TORQUE-DRIVER(6Kg-cm) |
| J-6252-520-A | | TORQUE-DRIVER(12Kg-cm) |
| J-6252-530-A | | TORQUE-DRIVER(26Kg-cm) |
| J-6253-970-A | | BITS SET OF TORQUE-DRIVER |
| J-6253-990-A | | ADJUSTMENT PIN (HD) |
| J-6254-000-A | | SPACER (HD) |
| J-6263-470-A | | ROVING DAC |
| J-6264-360-A | | BNC-UM CABLE |
| J-6266-030-A | | EXTENSION HARNESS, AUDIO REC |
| J-6266-040-A | | EXTENSION HARNESS, AUDIO ERASE |
| J-6266-300-A | | EXTENSION HARNESS, VIDEO ERASE |
| J-6266-310-A | | AUDIO REC HEAD, PB TOOL |
| J-6350-280-A | | TEST CLIP, IC TC-8 |
| J-6256-550-A | | TC POSITION ADJUSTMENT TOOL |
| 1-942-822-11 | | COAXIAL CABLE |
| 2-034-697-00 | | CLEANING PIECE |
| 7-662-001-41 | | MOLITOM GREASE NO.320(30gr bottle) |
| 7-700-733-01 | | ALIGNMENT SCREWDRIVER |
| 7-700-733-02 | | ALIGNMENT SCREWDRIVER |
| 7-700-751-02 | | NUT DRIVER, 5.5mm |
| 7-700-766-02 | | HEX. SCREWDRIVER, 1.4mm |
| 7-700-766-03 | | HEX. SCREWDRIVER, 2mm |
| 7-700-766-04 | | HEX. SCREWDRIVER, 2.5mm |
| 7-700-766-05 | | HEX. SCREWDRIVER, 3mm |
| 7-721-130-51 | | BALL POINT HEXAGONAL WRENCH |
| 7-723-902-00 | | DENTAL MIRROR |
| 8-960-072-01 | | ALIGNMENT TAPE FR5-1<br>(for Electrical alignment) |
| 8-960-072-11 | | ALIGNMENT TAPE FR2-1<br>(for Tape path alignment) |

# SECTION E
# CHANGED PARTS

NOTE: The numbers identified by making with ) are matching with each serial numbers.

807) Serial No. 10001 and higher
902) Serial No. 10201 and higher
904) Serial No. 10301 and higher
906) Serial No. 10401 and higher

## AP-22 BOARD

| | | | | |
|---|---|---|---|---|
| OLD) | C623 | NOT IN USE. | | |
| 902) | C623 | 1-130-487-00 | s | MYLAR 0.0022 5% 50V |
| OLD) | C64 | 1-131-368-00 | s | TANTALUM 3.3uF 10% 16V |
| 902) | C64 | DELETED. | | |
| OLD) | C70 | 1-130-479-00 | s | MYLAR 0.0047 5% 50V |
| 902) | C70 | 1-130-475-00 | s | MYLAR 0.0022 5% 50V |
| OLD) | C72 | 1-164-208-11 | s | CERAMIC 0.1 99% 50V |
| 902) | C72 | 1-130-495-00 | s | MYLAR 0.1uF 5% 50V |
| OLD) | JP1 | NOT IN USE. | | |
| 904) | JP1 | 1-566-388-11 | s | CONNECTOR, 8P, MALE |
| OLD) | JP2 | NOT IN USE. | | |
| 904) | JP2 | 1-566-388-11 | s | CONNECTOR, 8P, MALE |
| OLD) | JP421 | NOT IN USE. | | |
| 904) | JP421 | 1-566-388-11 | s | CONNECTOR, 8P, MALE |
| OLD) | JP422 | NOT IN USE. | | |
| 904) | JP422 | 1-566-388-11 | s | CONNECTOR, 8P, MALE |
| OLD) | JP423 | NOT IN USE. | | |
| 904) | JP423 | 1-566-388-11 | s | CONNECTOR, 8P, MALE |
| OLD) | JP441 | NOT IN USE. | | |
| 904) | JP441 | 1-566-388-11 | s | CONNECTOR, 8P, MALE |
| OLD) | JP442 | NOT IN USE. | | |
| 904) | JP442 | 1-566-388-11 | s | CONNECTOR, 8P, MALE |
| OLD) | JP443 | NOT IN USE. | | |
| 904) | JP443 | 1-566-388-11 | s | CONNECTOR, 8P, MALE |
| OLD) | JP461 | NOT IN USE. | | |
| 904) | JP461 | 1-566-388-11 | s | CONNECTOR, 8P, MALE |
| OLD) | JP462 | NOT IN USE. | | |
| 904) | JP462 | 1-566-388-11 | s | CONNECTOR, 8P, MALE |
| OLD) | JP463 | NOT IN USE. | | |
| 904) | JP463 | 1-566-388-11 | s | CONNECTOR, 8P, MALE |
| OLD) | JS1 | NOT IN USE. | | |
| 904) | JS1 | 1-563-859-11 | s | PLUG, SHORTING |
| OLD) | JS421 | NOT IN USE. | | |
| 904) | JS421 | 1-563-859-11 | s | PLUG, SHORTING |
| OLD) | JS441 | NOT IN USE. | | |
| 904) | JS441 | 1-563-859-11 | s | PLUG, SHORTING |
| OLD) | JS461 | NOT IN USE. | | |
| 904) | JS461 | 1-563-859-11 | s | PLUG, SHORTING |
| OLD) | L5 | NOT IN USE. | | |
| 904) | L5 | 1-410-425-11 | s | INDUCTOR 33UH |
| OLD) | Q15 | NOT IN USE. | | |
| 902) | Q15 | 8-729-203-49 | s | TRANSISTOR 2SC3327-B |
| OLD) | Q16 | NOT IN USE. | | |
| 902) | Q16 | 8-729-900-89 | s | TRANSISTOR DTC144ES |
| OLD) | R62 | 1-215-430-00 | s | METAL 2400 1% 1/6W |
| 902) | R62 | 1-215-426-00 | s | METAL 1600 1% 1/6W |
| OLD) | R629 | NOT IN USE. | | |
| 902) | R629 | 1-215-445-11 | s | METAL 10K 1% 1/6W |
| OLD) | R63 | 1-215-480-00 | s | METAL 300K 1% 1/6W |
| 902) | R63 | 1-215-449-00 | s | METAL 15K 1% 1/6W |
| OLD) | R630 | NOT IN USE. | | |
| 902) | R630 | 1-215-433-00 | s | METAL 3300 1% 1/6W |
| OLD) | R631 | NOT IN USE. | | |
| 902) | R631 | 1-215-433-00 | s | METAL 3300 1% 1/6W |

(AP-22 BOARD)

| | | | | |
|---|---|---|---|---|
| OLD) | R64 | 1-215-432-00 | s | METAL 3K 1% 1/6W |
| 902) | R64 | DELETED. | | |
| OLD) | R65 | 1-215-464-00 | s | METAL 62K 1% 1/6W |
| 902) | R65 | 1-215-432-00 | s | METAL 3K 1% 1/6W |
| OLD) | R81 | 1-215-424-00 | s | METAL 1.3K 1% 1/6W |
| 902) | R81 | 1-215-414-00 | s | METAL 510 1% 1/6W |

## AU-109 BOARD

| | | | | |
|---|---|---|---|---|
| OLD) | C1001 | NOT IN USE. | | |
| 902) | C1001 | 1-131-365-11 | s | TANTAL 10 20% 20V |
| OLD) | C1002 | NOT IN USE. | | |
| 902) | C1002 | 1-131-365-11 | s | TANTAL 10 20% 20V |
| OLD) | IC117 | 8-759-000-99 | s | IC MC74HC74N |
| 902) | IC117 | 8-759-916-29 | s | IC SN74HC74N |
| OLD) | IC12 | 8-759-000-99 | s | IC MC74HC74N |
| 902) | IC12 | 8-759-916-29 | s | IC SN74HC74N |
| OLD) | IC317 | 8-759-000-99 | s | IC MC74HC74N |
| 902) | IC317 | 8-759-916-29 | s | IC SN74HC74N |
| OLD) | IC517 | 8-759-000-99 | s | IC MC74HC74N |
| 902) | IC517 | 8-759-916-29 | s | IC SN74HC74N |
| OLD) | IC6 | PENDING | s | IC MBM27C256H-AU109-02-0 |
| 902) | IC6 | 8-759-733-05 | s | IC 27C256-AU109-02-1, EPROM |
| 807) | IC6 | 8-759-550-30 | s | IC 27C256-AU02-1-2, EPROM |
| OLD) | IC717 | 8-759-000-99 | s | IC MC74HC74N |
| 902) | IC717 | 8-759-916-29 | s | IC SN74HC74N |
| OLD) | Q3 | 8-729-900-89 | s | TRANSISTOR DTC144ES |
| 904) | Q3 | DELETED. | | |
| OLD) | R1028 | NOT IN USE. | | |
| 902) | R1028 | 1-215-462-00 | s | METAL 1.6K 1% 1/6W |
| OLD) | R1029 | NOT IN USE. | | |
| 902) | R1029 | 1-215-462-00 | s | METAL 1.6K 1% 1/6W |
| OLD) | R18 | 1-215-445-00 | s | METAL 10K 1% 1/6W |
| 904) | R18 | DELETED. | | |
| OLD) | R945 | 1-215-442-00 | s | METAL 7.5K 1% 1/6W |
| 902) | R945 | 1-215-436-00 | s | METAL 4.3K 1% 1/6W |
| OLD) | RV902 | 1-237-517-21 | s | RES, ADJ, METAL 5K |
| 902) | RV902 | 1-237-518-21 | s | RES, ADJ, METAL 10K |

## CD-37 BOARD

| | | | | |
|---|---|---|---|---|
| OLD) | C14 | 1-161-055-00 | s | CERAMIC 0.022 10% 50V |
| 904) | C14 | 1-164-208-31 | s | CERAMIC 0.1 99% 50V |
| OLD) | C15 | 1-161-055-00 | s | CERAMIC 0.022 10% 50V |
| 904) | C15 | 1-164-208-31 | s | CERAMIC 0.1 99% 50V |
| OLD) | C18 | 1-161-055-00 | s | CERAMIC 0.022 10% 50V |
| 904) | C18 | 1-164-208-31 | s | CERAMIC 0.1 99% 50V |

(CD-37 BOARD)

| | | | | |
|---|---|---|---|---|
| OLD) | C26 | 1-161-055-00 | s | CERAMIC 0.022 10% 50V |
| 904) | C26 | 1-164-208-31 | s | CERAMIC 0.1 99% 50V |
| OLD) | C31 | 1-161-055-00 | s | CERAMIC 0.022 10% 50V |
| 904) | C31 | 1-164-208-31 | s | CERAMIC 0.1 99% 50V |
| OLD) | C32 | 1-161-055-00 | s | CERAMIC 0.022 10% 50V |
| 904) | C32 | 1-164-208-31 | s | CERAMIC 0.1 99% 50V |
| OLD) | C33 | 1-161-055-00 | s | CERAMIC 0.022 10% 50V |
| 904) | C33 | 1-164-208-31 | s | CERAMIC 0.1 99% 50V |
| OLD) | C34 | 1-161-055-00 | s | CERAMIC 0.022 10% 50V |
| 904) | C34 | 1-164-208-31 | s | CERAMIC 0.1 99% 50V |
| OLD) | C35 | 1-161-055-00 | s | CERAMIC 0.022 10% 50V |
| 904) | C35 | 1-164-208-31 | s | CERAMIC 0.1 99% 50V |
| OLD) | C37 | 1-161-055-00 | s | CERAMIC 0.022 10% 50V |
| 904) | C37 | 1-164-208-31 | s | CERAMIC 0.1 99% 50V |
| OLD) | C4 | 1-161-055-00 | s | CERAMIC 0.022 10% 50V |
| 904) | C4 | 1-164-208-31 | s | CERAMIC 0.1 99% 50V |
| OLD) | C41 | 1-161-055-00 | s | CERAMIC 0.022 10% 50V |
| 904) | C41 | 1-164-208-31 | s | CERAMIC 0.1 99% 50V |
| OLD) | C42 | 1-161-055-00 | s | CERAMIC 0.022 10% 50V |
| 904) | C42 | 1-164-208-31 | s | CERAMIC 0.1 99% 50V |
| OLD) | C43 | 1-161-055-00 | s | CERAMIC 0.022 10% 50V |
| 904) | C43 | 1-164-208-31 | s | CERAMIC 0.1 99% 50V |
| OLD) | C44 | 1-161-055-00 | s | CERAMIC 0.022 10% 50V |
| 904) | C44 | 1-164-208-31 | s | CERAMIC 0.1 99% 50V |
| OLD) | C46 | 1-161-055-00 | s | CERAMIC 0.022 10% 50V |
| 904) | C46 | 1-164-208-31 | s | CERAMIC 0.1 99% 50V |
| OLD) | C47 | 1-161-055-00 | s | CERAMIC 0.022 10% 50V |
| 904) | C47 | 1-164-208-31 | s | CERAMIC 0.1 99% 50V |
| OLD) | C49 | 1-161-055-00 | s | CERAMIC 0.022 10% 50V |
| 904) | C49 | 1-164-208-31 | s | CERAMIC 0.1 99% 50V |
| OLD) | C5 | 1-161-055-00 | s | CERAMIC 0.022 10% 50V |
| 904) | C5 | 1-164-208-31 | s | CERAMIC 0.1 99% 50V |
| OLD) | C50 | 1-161-055-00 | s | CERAMIC 0.022 10% 50V |
| 904) | C50 | 1-164-208-31 | s | CERAMIC 0.1 99% 50V |
| OLD) | C54 | 1-161-055-00 | s | CERAMIC 0.022 10% 50V |
| 904) | C54 | 1-164-208-31 | s | CERAMIC 0.1 99% 50V |
| OLD) | C55 | 1-161-055-00 | s | CERAMIC 0.022 10% 50V |
| 904) | C55 | 1-164-208-31 | s | CERAMIC 0.1 99% 50V |
| OLD) | C56 | 1-161-055-00 | s | CERAMIC 0.022 10% 50V |
| 904) | C56 | 1-164-208-31 | s | CERAMIC 0.1 99% 50V |
| OLD) | C57 | 1-161-055-00 | s | CERAMIC 0.022 10% 50V |
| 904) | C57 | 1-164-208-31 | s | CERAMIC 0.1 99% 50V |
| OLD) | C58 | 1-161-055-00 | s | CERAMIC 0.022 10% 50V |
| 904) | C58 | 1-164-208-31 | s | CERAMIC 0.1 99% 50V |
| OLD) | C59 | 1-161-055-00 | s | CERAMIC 0.022 10% 50V |
| 904) | C59 | 1-164-208-31 | s | CERAMIC 0.1 99% 50V |
| OLD) | C60 | 1-161-055-00 | s | CERAMIC 0.022 10% 50V |
| 904) | C60 | 1-164-208-31 | s | CERAMIC 0.1 99% 50V |
| OLD) | C61 | 1-161-055-00 | s | CERAMIC 0.022 10% 50V |
| 904) | C61 | 1-164-208-31 | s | CERAMIC 0.1 99% 50V |
| OLD) | C62 | 1-161-055-00 | s | CERAMIC 0.022 10% 50V |
| 904) | C62 | 1-164-208-31 | s | CERAMIC 0.1 99% 50V |
| OLD) | C63 | 1-161-055-00 | s | CERAMIC 0.022 10% 50V |
| 904) | C63 | 1-164-208-31 | s | CERAMIC 0.1 99% 50V |
| OLD) | C64 | 1-161-055-00 | s | CERAMIC 0.022 10% 50V |
| 904) | C64 | 1-164-208-31 | s | CERAMIC 0.1 99% 50V |
| OLD) | C65 | 1-161-055-00 | s | CERAMIC 0.022 10% 50V |
| 904) | C65 | 1-164-208-31 | s | CERAMIC 0.1 99% 50V |
| OLD) | C66 | 1-161-055-00 | s | CERAMIC 0.022 10% 50V |
| 904) | C66 | 1-164-208-31 | s | CERAMIC 0.1 99% 50V |

(CD-37 BOARD)

| | | | | |
|---|---|---|---|---|
| OLD) | C67 | 1-161-055-00 | s | CERAMIC 0.022 10% 50V |
| 904) | C67 | 1-164-208-31 | s | CERAMIC 0.1 99% 50V |
| OLD) | C70 | 1-161-055-00 | s | CERAMIC 0.022 10% 50V |
| 904) | C70 | 1-164-208-31 | s | CERAMIC 0.1 99% 50V |
| OLD) | C71 | 1-161-055-00 | s | CERAMIC 0.022 10% 50V |
| 904) | C71 | 1-164-208-31 | s | CERAMIC 0.1 99% 50V |
| OLD) | C72 | 1-161-055-00 | s | CERAMIC 0.022 10% 50V |
| 904) | C72 | 1-164-208-31 | s | CERAMIC 0.1 99% 50V |
| OLD) | C73 | 1-161-055-00 | s | CERAMIC 0.022 10% 50V |
| 904) | C73 | 1-164-208-31 | s | CERAMIC 0.1 99% 50V |
| OLD) | C74 | 1-161-055-00 | s | CERAMIC 0.022 10% 50V |
| 904) | C74 | 1-164-208-31 | s | CERAMIC 0.1 99% 50V |
| OLD) | C75 | 1-161-055-00 | s | CERAMIC 0.022 10% 50V |
| 904) | C75 | 1-164-208-31 | s | CERAMIC 0.1 99% 50V |
| OLD) | C76 | 1-161-055-00 | s | CERAMIC 0.022 10% 50V |
| 904) | C76 | 1-164-208-31 | s | CERAMIC 0.1 99% 50V |
| OLD) | C8 | 1-161-055-00 | s | CERAMIC 0.022 10% 50V |
| 904) | C8 | 1-164-208-31 | s | CERAMIC 0.1 99% 50V |
| OLD) | C9 | 1-161-055-00 | s | CERAMIC 0.022 10% 50V |
| 904) | C9 | 1-164-208-31 | s | CERAMIC 0.1 99% 50V |
| OLD) | R161 | 1-215-466-00 | s | METAL 75K 1% 1/6W |
| 904) | R161 | 1-215-460-00 | s | METAL 43K 1% 1/6W |
| OLD) | R162 | 1-249-429-11 | s | CARBON 10K 5% 1/4W |
| 904) | R162 | 1-249-417-11 | s | CARBON 1K 5% 1/4W |

-----------

## DIF-2 BOARD

-----------

| | | | | |
|---|---|---|---|---|
| OLD) | C12 | NOT IN USE. | | |
| 902) | C12 | 1-161-051-00 | s | CERAMIC 0.01 10% 50V |
| OLD) | C13 | NOT IN USE. | | |
| 902) | C13 | 1-161-051-00 | s | CERAMIC 0.01 10% 50V |
| OLD) | C36 | NOT IN USE. | | |
| 902) | C36 | 1-161-051-00 | s | CERAMIC 0.01 10% 50V |
| OLD) | C39 | 1-161-051-00 | s | CERAMIC 0.01 10% 50V |
| 902) | C39 | DELETED. | | |
| OLD) | IC1 | 8-759-923-72 | s | IC SN75157P |
| 902) | IC1 | 8-759-002-72 | s | IC MC10H116L |
| OLD) | IC10 | 8-759-002-80 | s | IC MC10H131L |
| 902) | IC10 | DELETED. | | |
| OLD) | IC12 | NOT IN USE. | | |
| 902) | IC12 | 8-759-002-80 | s | IC MC10H131L |
| OLD) | IC16 | NOT IN USE. | | |
| 902) | IC16 | 8-759-002-71 | s | IC MC10H115L |
| OLD) | IC17 | NOT IN USE. | | |
| 902) | IC17 | 8-759-002-72 | s | IC MC10H116L |
| OLD) | IC8 | 8-759-926-31 | s | IC AM26LS31PC |
| 902) | IC8 | 8-759-002-72 | s | IC MC10H116L |
| OLD) | IC9 | 8-759-002-72 | s | IC MC10H116L |
| 902) | IC9 | 8-759-926-31 | s | IC AM26LS31PC |
| OLD) | RB30 | NOT IN USE. | | |
| 902) | RB30 | 1-231-503-00 | s | BLOCK, RESISTOR 560X4 |
| OLD) | RB31 | NOT IN USE. | | |
| 902) | RB31 | 1-231-503-00 | s | BLOCK, RESISTOR 560X4 |
| OLD) | RB32 | NOT IN USE. | | |
| 902) | RB32 | 1-231-503-00 | s | BLOCK, RESISTOR 560X4 |
| OLD) | RB33 | NOT IN USE. | | |
| 902) | RB33 | 1-231-503-00 | s | BLOCK, RESISTOR 560X4 |

### DRC-1 BOARD

| | | |
|---|---|---|
| OLD) | IC8 | 8-759-700-53 s IC NJM7808A |
| 902) | IC8 | 8-759-701-77 s IC NJM7808FA |
| OLD) | IC9 | 8-759-700-52 s IC NJM7806A |
| 902) | IC9 | 8-759-701-76 s IC NJM7806FA |
| OLD) | Q14 | NOT IN USE. |
| 902) | Q14 | 8-729-119-76 s TRANSISTOR 2SA1175-HFE |
| OLD) | Q15 | NOT IN USE. |
| 902) | Q15 | 8-729-672-43 s TRANSISTOR 2SC2724-D |
| OLD) | R187 | 1-214-583-00 s METAL 12K 1% 1/8W |
| 902) | R187 | 1-214-587-00 s METAL 18K 1% 1/8W |
| 906) | R187 | 1-214-583-00 s METAL 12K 1% 1/8W |
| OLD) | R194 | 1-215-830-11 s METAL 100K 1% 1/8W |
| 902) | R194 | DELETED. |
| OLD) | R287 | 1-214-583-00 s METAL 12K 1% 1/8W |
| 902) | R287 | 1-214-587-00 s METAL 18K 1% 1/8W |
| 906) | R287 | 1-214-583-00 s METAL 12K 1% 1/8W |
| OLD) | R294 | 1-215-830-11 s METAL 100K 1% 1/8W |
| 902) | R294 | DELETED. |
| OLD) | R387 | 1-214-583-00 s METAL 12K 1% 1/8W |
| 902) | R387 | 1-214-587-00 s METAL 18K 1% 1/8W |
| 906) | R387 | 1-214-583-00 s METAL 12K 1% 1/8W |
| OLD) | R394 | 1-215-830-11 s METAL 100K 1% 1/8W |
| 902) | R394 | DELETED. |
| OLD) | R40 | NOT IN USE. |
| 904) | R40 | 1-215-485-00 s METAL 470K 1% 1/6W |
| OLD) | R43 | 1-215-830-11 s METAL 100K 1% 1/8W |
| 902) | R43 | DELETED. |
| OLD) | R44 | 1-215-830-11 s METAL 100K 1% 1/8W |
| 902) | R44 | DELETED. |
| OLD) | R45 | 1-215-830-11 s METAL 100K 1% 1/8W |
| 902) | R45 | DELETED. |
| OLD) | R46 | 1-215-830-11 s METAL 100K 1% 1/8W |
| 902) | R46 | DELETED. |
| OLD) | R47 | 1-215-485-00 s METAL 470K 1% 1/6W |
| 904) | R47 | DELETED. |
| OLD) | R487 | 1-214-583-00 s METAL 12K 1% 1/8W |
| 902) | R487 | 1-214-587-00 s METAL 18K 1% 1/8W |
| 906) | R487 | 1-214-583-00 s METAL 12K 1% 1/8W |
| OLD) | R494 | 1-215-830-11 s METAL 100K 1% 1/8W |
| 902) | R494 | DELETED. |
| OLD) | R55 | NOT IN USE. |
| 902) | R55 | 1-214-549-00 s METAL 470 1% 1/8W |
| OLD) | R56 | NOT IN USE. |
| 902) | R56 | 1-214-551-00 s METAL 560 1% 1/8W |
| OLD) | R57 | NOT IN USE. |
| 902) | R57 | 1-215-453-00 s METAL 22K 1% 1/6W |
| OLD) | R59 | NOT IN USE. |
| 902) | R59 | 1-214-589-00 s METAL 22K 1% 1/8W |
| OLD) | R60 | NOT IN USE. |
| 902) | R60 | 1-214-581-00 s METAL 10K 1% 1/8W |

### KC-14 BOARD

| | | |
|---|---|---|
| OLD) | ICE7 | 8-759-000-99 s IC MC74HC74N |
| 904) | ICE7 | 8-759-916-29 s IC SN74HC74N |

### KY-139 BOARD

| | | |
|---|---|---|
| OLD) | IC1 | 8-759-205-30 s IC TC74HC273F |
| 904) | IC1 | 8-759-926-56 s IC SN74HC273NS |
| OLD) | IC11 | 8-759-205-30 s IC TC74HC273F |
| 904) | IC11 | 8-759-926-56 s IC SN74HC273NS |
| OLD) | IC13 | 8-759-205-30 s IC TC74HC273F |
| 904) | IC13 | 8-759-926-56 s IC SN74HC273NS |
| OLD) | IC3 | 8-759-205-30 s IC TC74HC273F |
| 904) | IC3 | 8-759-926-56 s IC SN74HC273NS |
| OLD) | IC5 | 8-759-205-30 s IC TC74HC273F |
| 904) | IC5 | 8-759-926-56 s IC SN74HC273NS |
| OLD) | IC7 | 8-759-205-30 s IC TC74HC273F |
| 904) | IC7 | 8-759-926-56 s IC SN74HC273NS |
| OLD) | IC9 | 8-759-205-30 s IC TC74HC273F |
| 904) | IC9 | 8-759-926-56 s IC SN74HC273NS |

### PRD-1 BOARD

| | | |
|---|---|---|
| OLD) | C57 | NOT IN USE. |
| 902) | C57 | 1-161-051-00 s CERAMIC 0.01 10% 50V |
| OLD) | C58 | NOT IN USE. |
| 902) | C58 | 1-161-051-00 s CERAMIC 0.01 10% 50V |
| OLD) | C59 | NOT IN USE. |
| 902) | C59 | 1-161-051-00 s CERAMIC 0.01 10% 50V |
| OLD) | IC39 | NOT IN USE. |
| 902) | IC39 | 8-759-914-03 s IC SN74LS06N |
| OLD) | JP2 | 1-564-947-21 o PIN, SHORTING, 2P |
| 902) | JP2 | DELETED. |
| OLD) | JP3 | 1-564-947-21 o PIN, SHORTING, 2P |
| 902) | JP3 | DELETED. |
| OLD) | JP4 | 1-564-947-21 o PIN, SHORTING, 2P |
| 902) | JP4 | DELETED. |
| OLD) | JP5 | 1-564-947-21 o PIN, SHORTING, 2P |
| 902) | JP5 | DELETED. |
| OLD) | JP6 | 1-564-947-21 o PIN, SHORTING, 2P |
| 902) | JP6 | DELETED. |
| OLD) | JP7 | 1-564-947-21 o PIN, SHORTING, 2P |
| 902) | JP7 | DELETED. |
| OLD) | JP8 | 1-564-947-21 o PIN, SHORTING, 2P |
| 902) | JP8 | DELETED. |
| OLD) | JP9 | 1-564-947-21 o PIN, SHORTING, 2P |
| 902) | JP9 | DELETED. |
| OLD) | JS2 | 1-562-579-21 s PLUG, SHORTING |
| 902) | JS2 | DELETED. |
| OLD) | JS3 | 1-562-579-21 s PLUG, SHORTING |
| 902) | JS2 | DELETED. |
| OLD) | R61 | 1-215-441-00 s METAL 6.8K 1% 1/6W |
| 902) | R61 | 1-215-428-00 s METAL 2K 1% 1/6W |
| OLD) | R62 | 1-215-445-00 s METAL 10K 1% 1/6W |
| 902) | R62 | 1-215-431-00 s METAL 2.7K 1% 1/6W |
| OLD) | R79 | NOT IN USE. |
| 902) | R79 | 1-215-445-00 s METAL 10K 1% 1/6W |
| OLD) | R80 | NOT IN USE. |
| 902) | R80 | 1-215-445-00 s METAL 10K 1% 1/6W |

### (PRD-1 BOARD)

| | | | | |
|---|---|---|---|---|
| OLD) | R82 | NOT IN USE. | | |
| 902) | R82 | 1-215-397-00 | s | METAL 100 1% 1/6W |
| OLD) | R83 | NOT IN USE. | | |
| 902) | R83 | 1-215-401-11 | s | METAL 150 1% 1/6W |
| OLD) | RV101 | 1-228-453-00 | s | RES, ADJ, CERMET 100 |
| 903) | RV101 | DELETED. | | |
| OLD) | RV2 | 1-228-455-00 | s | RES, ADJ, METAL 500 |
| 902) | RV2 | DELETED. | | |
| OLD) | RV201 | 1-228-453-00 | s | RES, ADJ, CERMET 100 |
| 902) | RV201 | DELETED. | | |
| OLD) | RV301 | 1-228-453-00 | s | RES, ADJ, CERMET 100 |
| 902) | RV301 | DELETED. | | |
| OLD) | RV401 | 1-228-453-00 | s | RES, ADJ, CERMET 100 |
| 902) | RV401 | DELETED. | | |
| OLD) | RV501 | 1-228-453-00 | s | RES, ADJ, CERMET 100 |
| 902) | RV501 | DELETED. | | |
| OLD) | RV601 | 1-228-453-00 | s | RES, ADJ, CERMET 100 |
| 902) | RV601 | DELETED. | | |
| OLD) | RV701 | 1-228-453-00 | s | RES, ADJ, CERMET 100 |
| 902) | RV701 | DELETED. | | |
| OLD) | RV801 | 1-228-453-00 | s | RES, ADJ, CERMET 100 |
| 902) | RV801 | DELETED. | | |

### SV-90 BOARD

| | | | | |
|---|---|---|---|---|
| OLD) | ICJ12 | 8-759-000-99 | s | IC MC74HC74N |
| 902) | ICJ12 | 8-759-916-29 | s | IC SN74HC74N |
| OLD) | ICJ20 | 8-759-000-99 | s | IC MC74HC74N |
| 902) | ICJ20 | 8-759-916-29 | s | IC SN74HC74N |
| OLD) | ICJ7 | 8-759-000-99 | s | IC MC74HC74N |
| 902) | ICJ7 | 8-759-916-29 | s | IC SN74HC74N |
| OLD) | ICJ9 | 8-759-000-99 | s | IC MC74HC74N |
| 902) | ICJ9 | 8-759-916-29 | s | IC SN74HC74N |
| OLD) | ICK11 | 8-759-000-99 | s | IC MC74HC74N |
| 902) | ICK11 | 8-759-916-29 | s | IC SN74HC74N |
| OLD) | ICM10 | 8-759-000-99 | s | IC MC74HC74N |
| 902) | ICM10 | 8-759-916-29 | s | IC SN74HC74N |
| OLD) | ICM9 | 8-759-000-99 | s | IC MC74HC74N |
| 902) | ICM9 | 8-759-916-29 | s | IC SN74HC74N |
| OLD) | ICN2 | 8-759-000-99 | s | IC MC74HC74N |
| 902) | INC2 | 8-759-196-29 | s | IC SN74HC74N |
| OLD) | ICN3 | 8-759-000-99 | s | IC MC74HC74N |
| 902) | ICN3 | 8-759-916-29 | s | IC SN74HC74N |
| 904) | ICN3 | 8-759-739-76 | s | IC MBM27C256A-V1H1-1-2 |
| 807) | ICN3 | 8-759-550-27 | s | IC 27C256-V1H1-2-0 |
| OLD) | ICN5 | 8-759-730-34 | s | IC MBM27C256A-V0H1-0-0 |
| 902) | ICN5 | 8-759-733-23 | s | IC MBM27C256A-V0H1-1-0 |
| 904) | ICN5 | 8-759-739-75 | s | IC MBM27C256A-V0H1-1-2 |
| 807) | ICN5 | 8-759-550-26 | s | IC 27C256-V0H1-2-0 |

### SW-269 BAORD

| | | | | |
|---|---|---|---|---|
| OLD) | C13 | NOT IN USE. | | |
| 902) | C13 | 1-124-570-11 | s | ELECT 220uF 20% 16V |
| OLD) | C14 | NOT IN USE. | | |
| 902) | C14 | 1-124-570-11 | s | ELECT 220uF 20% 16V |
| OLD) | C15 | NOT IN USE. | | |
| 902) | C15 | 1-124-570-11 | s | ELECT 220uF 20% 16V |
| OLD) | C16 | NOT IN USE. | | |
| 902) | C16 | 1-124-570-11 | s | ELECT 220uF 20% 16V |
| OLD) | C17 | NOT IN USE. | | |
| 902) | C17 | 1-124-570-11 | s | ELECT 220uF 20% 16V |
| OLD) | IC1 | 8-759-207-91 | s | IC TC74HC541F |
| 902) | IC1 | 8-759-926-77 | s | IC SN74HC541NS |
| OLD) | IC5 | 8-759-205-35 | s | IC TC74HC564F |
| 902) | IC5 | 8-759-926-79 | s | IC SN74HC564NS |
| OLD) | IC8 | 8-759-205-09 | s | IC TC74HC138F |
| 902) | IC8 | 8-759-926-11 | s | IC SN74HC138NS |
| OLD) | IC9 | 8-759-205-09 | s | IC TC74HC138F |
| 902) | IC9 | 8-759-926-11 | s | IC SN74HC138NS |
| OLD) | R4 | 1-214-519-00 | s | METAL 27 1% 1/8W |
| 904) | R4 | 1-214-523-00 | s | METAL 39 1% 1/8W |
| OLD) | R5 | 1-214-519-00 | s | METAL 27 1% 1/8W |
| 904) | R5 | 1-214-523-00 | s | METAL 39 1% 1/8W |

### SY-103 BOARD

| | | | | |
|---|---|---|---|---|
| OLD) | ICN3 | 8-759-730-33 | s | IC MBM27C256A-Y1H1-0-0 |
| 902) | ICN3 | 8-759-733-26 | s | IC MBM27C256A-Y1H1-1-0 |
| OLD) | ICN5 | 8-759-730-32 | s | IC MBM27C256A-Y0H1-0-0 |
| 902) | ICN5 | 8-759-733-25 | s | IC MBM27C256A-Y0H1-1-0 |
| OLD) | ICH11 | 8-759-739-78 | s | IC MBM27C256A-Y1H1-1-2 |
| 807) | ICH11 | 8-759-550-29 | s | IC 27C256-Y1H1-2-0 |
| OLD) | ICH12 | 8-759-739-77 | s | IC MBM27C256A-Y0H1-1-2 |
| 807) | ICH12 | 8-759-550-28 | s | IC 27C256-Y0H1-2-0 |

### UDR-1 BOARD

| | | | | |
|---|---|---|---|---|
| OLD) | 1pc | NOT IN USE. | | |
| 902) | 1pc | 1-568-206-11 | o | RECEPTACLE PC BOARD |

## UDR-3 BOARD

| | | |
|---|---|---|
| OLD) | 1pc | NOT IN USE. |
| 902) | 1pc | 1-568-205-11 o PIN, CONNECTOR PC BOARD |

## VH-20 BOARD

| | | |
|---|---|---|
| OLD) | IC2 | 8-759-000-99 s IC MC74HC74N |
| 902) | IC2 | 8-759-916-29 s IC SN74HC74N |
| OLD) | IC6 | 8-759-000-99 s IC MC74HC74N |
| 902) | IC6 | 8-759-916-29 s IC SN74HC74N |
| OLD) | IC7 | 8-759-000-99 s IC MC74HC74N |
| 902) | IC7 | 8-759-916-29 s IC SN74HC74N |

## VR-74 BOARD

| | | |
|---|---|---|
| OLD) | L3 | 1-421-370-00 s COIL, CHOKE |
| 902) | L3 | DELETED. |
| OLD) | R1 | 1-214-691-00 s METAL 27 1% 1/4W |
| 902) | R1 | 1-249-398-11 s CARBON 27 5% 1/4W |
| OLD) | R2 | 1-214-691-00 s METAL 27 1% 1/4W |
| 902) | R2 | 1-249-398-11 s CARBON 27 5% 1/4W |

HDD-1000 (J)
HDD-1000 (UC)
HDD-1000 (EK)
3-731-390-07 Volume-2

Sony Corporation
**Broadcast Products Group**

Printed in Japan
1992. 11 09
© 1989
Published by B & P Operations Group